ECE/TRANS/175 (V. I+II)

Economic Commission for Europe
Inland Transport Committee

Restructured

ADR

applicable as from 1 January 2005

European Agreement

Concerning the International Carriage
of Dangerous Goods by Road

Vol. I + II

UNITED NATIONS
New York and Geneva, 2004

NOTE

The designations employed and the presentation of the material in this publication do not imply the expression of any opinion whatsoever on the part of the Secretariat of the United Nations concerning the legal status of any country, territory, city or area, or of its authorities, or concerning the delimitation of its frontiers or boundaries.

ECE/TRANS/175 (Vol. I+II)

Copyright © United Nations, 2004

All rights reserved.
No part of this publication may, for sales purposes, be reproduced, stored in a retrieval system or transmitted in any form or by any means, electronic, electrostatic, magnetic tape, mechanical, photocopying or otherwise, without prior permission in writing from the United Nations.

UNITED NATIONS PUBLICATION
Sales No.: E.04.VIII.1
ISBN 92-1-139097-4
(complete set of 2 volumes)
ISBN 92-1-139098-2 (Vol.I)
Volumes I and II not to be sold separately.

FOREWORD

General

The European Agreement concerning the International Carriage of Dangerous Goods by Road (ADR) was done at Geneva on 30 September 1957 under the auspices of the United Nations Economic Commission for Europe, and it entered into force on 29 January 1968. The Agreement itself was amended by the Protocol amending article 14 (3) done at New York on 21 August 1975, which entered into force on 19 April 1985.

According to article 2 of the Agreement, dangerous goods barred from carriage by Annex A shall not be accepted for international transport, while international transport of other dangerous goods shall be authorized subject to compliance with:

- the conditions laid down in Annex A for the goods in question, in particular as regards their packaging and labelling; and

- the conditions laid down in Annex B, in particular as regards the construction, equipment and operation of the vehicle carrying the goods in question.

Nevertheless, according to article 4, each Contracting Party shall retain the right to regulate or prohibit, for reasons other than safety during carriage, the entry of dangerous goods into its territory. Contracting Parties also retain the right to arrange, by bilateral or multilateral agreements, that certain dangerous goods which are prohibited from carriage by Annex A be internationally carried, subject to certain conditions, on their territories, or that dangerous goods authorized to be carried internationally according to Annex A be carried on their territories under conditions less stringent than those specified in Annexes A and B.

Annexes A and B have been regularly amended and updated since the entry into force of ADR.

Structure of Annexes A and B

The Working Party on the Transport of Dangerous Goods (WP.15) of the Economic Commission for Europe's Inland Transport Committee decided, at its fifty-first session (26-30 October 1992), to restructure Annexes A and B, on the basis of a proposal by the International Road Transport Union (TRANS/WP.15/124, paras. 100-108). The main objectives were to make the requirements more accessible and more user-friendly so that they could be applied more easily not only to international road transport operations under ADR, but also to domestic traffic in all European States through national or European Community legislation, and ultimately to ensure a consistent regulatory framework at European level. It was also considered necessary to identify more clearly the duties of the various participants in the transport chain, to group more systematically the requirements concerning these various participants, and to differentiate the legal requirements of ADR from the European or international standards that could be applied to meet such requirements.

The new structure is consistent with that of the United Nations *Recommendations on the Transport of Dangerous Goods*, *Model Regulations*, the *International Maritime Dangerous Goods Code (IMDG Code)* and the *Regulations concerning the International Carriage of Dangerous Goods by Rail* (RID).

It has been split into nine parts, but still grouped under two annexes to align with the wording of article 2 of the Agreement itself. The layout is as follows:

Annex A: General provisions and provisions concerning dangerous articles and substances

Part 1 General provisions
Part 2 Classification
Part 3 Dangerous goods list, special provisions and exemptions related to dangerous goods packed in limited quantities
Part 4 Packing and tank provisions

Part 5 Consignment procedures
Part 6 Requirements for the construction and testing of packagings, intermediate bulk containers (IBCs), large packagings, tanks and bulk containers
Part 7 Provisions concerning the conditions of carriage, loading, unloading and handling

Annex B: Provisions concerning transport equipment and transport operations

Part 8 Requirements for vehicle crews, equipment, operation and documentation
Part 9 Requirements concerning the construction and approval of vehicles

Part 1, which contains general provisions and definitions, is an essential part, since it contains all definitions for terms used throughout the other parts, and it defines precisely the scope and applicability of ADR, including the possibility of exemptions, as well as the applicability of other regulations. It also contains provisions concerning training, derogations and transitional measures, the respective safety obligations of the various participants in a chain of transport of dangerous goods, control measures and safety advisers. New provisions concerning transport of dangerous goods security have also been included in this version.

Central to the use of the restructured ADR is table A of Chapter 3.2 which contains the dangerous goods list in the numerical order of UN numbers. Once the UN number of a specific dangerous substance or article has been determined, the table provides cross-references to specific requirements to be applied for the carriage of that substance or article, and to the chapters or sections where these specific requirements may be found. Nevertheless, it should be borne in mind that the general requirements or class specific requirements of the various Parts have to be applied in addition to specific requirements, as relevant.

An alphabetical index which indicates the UN number assigned to specific dangerous goods has been prepared by the secretariat and added as table B of Chapter 3.2 to facilitate the access to table A when the UN number is unknown. This table B is not an official part of ADR and has been added in the publication for easy reference only.

When goods which are known or suspected to be dangerous cannot be found by name in any of tables A or B, they have to be classified in accordance with Part 2, which contains all relevant procedures and criteria to determine whether such goods are deemed to be dangerous or not and which UN number should be assigned.

Applicable texts

A first version of the restructured ADR ("2001 restructured ADR"), applicable as from 1 July 2001, was published under the symbol ECE/TRANS/140, vol.I and II, and corrigenda 1, 2, 4 and 6). A first amendment series entered into force on 1 January 2003 and a second version ("2003 restructured ADR") was published accordingly (ECE/TRANS/160, vol.I and II, and corrigenda 1, 2 and 3).

This version ("2005 restructured ADR") takes into account all new amendments adopted by WP.15 in 2002, 2003 and 2004, circulated under the symbols TRANS/WP.15/178, TRANS/WP.15/178/Corr.1 and TRANS/WP.15/178/Add.1, which, subject to acceptance by the Contracting Parties in accordance with article 14(3) of the Agreement, should enter into force on 1 January 2005.

Nevertheless, due to the transitional measures provided for in 1.6.1.1 of Annex A, the previous version ("2003 restructured ADR") may continue to be used until 30 June 2005.

Territorial applicability

ADR is an Agreement between States, and there is no overall enforcing authority. In practice, highway checks are carried out by Contracting Parties, and non-compliance may then result in legal action by national authorities against offenders in accordance with their domestic legislation. ADR itself does not prescribe any penalties. At the time of publishing, those Contracting Parties are Austria, Azerbaijan, Belarus, Belgium, Bosnia and Herzegovina, Bulgaria, Croatia, Cyprus, Czech Republic, Denmark, Estonia, Finland, France, Germany, Greece, Hungary, Italy, Kazakhstan, Latvia, Liechtenstein, Lithuania, Luxembourg, Morocco, Netherlands, Norway, Poland, Portugal, Republic of Moldova, Romania, Russian Federation, Serbia and Montenegro, Slovakia, Slovenia, Spain, Sweden, Switzerland, The former Yugoslav Republic of Macedonia, Ukraine and United Kingdom.

ADR applies to transport operations performed on the territory of at least two of the above-mentioned Contracting Parties. In addition, it should be noted that, in the interest of uniformity and free trading across the European Union (EU), Annexes A and B of ADR have also been adopted by EU Member States as the basis for regulation of the carriage of dangerous goods by road within and between their territories (Council directive 94/55/EC of 21 November 1994 on the approximation of the laws of the Member States with regard to the transport of dangerous goods by road, as amended). A number of non-EU countries have also adopted Annexes A and B of ADR as the basis for their national legislation.

Additional practical information

For easy reference, the secretariat has included in this publication an appendix to Part 1 which contains the list of competent authorities of all Contracting Parties to ADR, up to date on 1 June 2004. Any query concerning the application of ADR should be directed to the relevant competent authority. Additional information may also be found on the UNECE Transport Division web site on the following page:

http://www.unece.org/trans/danger/publi/adr/adr_e.html

This information, updated on a continuous basis, concerns:

- the status of ADR;
- Depositary notifications (e.g.: new Contracting Parties, amendments or corrections to legal texts);
- Publication details (corrections to the publication, new publications);
- List and details of competent authorities;
- Text and status of multilateral agreements concluded under Chapter 1.5;
- Notifications under 1.9.4;
- Other notifications.

EUROPEAN AGREEMENT CONCERNING THE INTERNATIONAL CARRIAGE OF DANGEROUS GOODS BY ROAD (ADR)

THE CONTRACTING PARTIES,

DESIRING to increase the safety of international transport by road,

HAVE AGREED as follows:

Article 1

For the purpose of this Agreement,

(a) the term "vehicle" shall mean motor vehicles, articulated vehicles, trailers and semi-trailers, as defined in article 4 of the Convention on Road Traffic of 19 September 1949, other than vehicles belonging to or under the orders of the armed forces of a Contracting Party;

(b) the term "dangerous goods" shall mean those substances and articles the international carriage by road of which is prohibited by, or authorized only on certain conditions by, Annexes A and B;

(c) the term "international transport" shall mean any transport operation performed on the territory of at least two Contracting Parties by vehicles defined in (a) above.

Article 2

1. Subject to the provisions of article 4, paragraph 3, dangerous goods barred from carriage by Annex A shall not be accepted for international transport.

2. International transport of other dangerous goods shall be authorized subject to compliance with:

(a) the conditions laid down in Annex A for the goods in question, in particular as regards their packaging and labelling, and

(b) the conditions laid down in Annex B, in particular as regards the construction, equipment and operation of the vehicle carrying the goods in question, subject to the provisions of article 4, paragraph 2.

Article 3

The Annexes to this Agreement shall form an integral part thereof.

Article 4

1. Each Contracting Party shall retain the right to regulate or prohibit, for reasons other than safety during carriage, the entry of dangerous goods into its territory.

2. Vehicles in service on the territory of a Contracting Party at the time of entry into force of this Agreement or brought into service on such territory within two months after its entry into force shall be allowed, for a period of three years from such entry into force, to perform the international transport of dangerous goods even if their construction and equipment do not entirely conform to the requirements laid down in Annex B for the transport operation in question. Under special clauses of Annex B, however, this period may be reduced.

3. The Contracting Parties shall retain the right to arrange, by special bilateral or multilateral agreements, that certain of the dangerous goods which under this Agreement are barred from all international transport may, subject to certain conditions, be accepted for international transport on their territories, or that dangerous goods which under this Agreement are acceptable for international transport only on specified conditions may be accepted for international transport on their territories under conditions less stringent than those laid down in the Annexes to this Agreement. The special bilateral or multilateral agreements referred to in this paragraph shall be communicated to the Secretary-General of the United Nations, who shall communicate them to the Contracting Parties which are not signatories to the said agreements.

Article 5

The transport operations to which this Agreement applies shall remain subject to national or international regulations applicable in general to road traffic, international road transport and international trade.

Article 6

1. Countries members of the Economic Commission for Europe and countries admitted to the Commission in a consultative capacity under paragraph 8 of the Commission's terms of reference may become Contracting Parties to this Agreement.

(a) by signing it;

(b) by ratifying it after signing it subject to ratification;

(c) by acceding to it.

2. Such countries as may participate in certain activities of the Economic Commission for Europe in accordance with paragraph 11 of the Commission's terms of reference may become Contracting Parties to this Agreement by acceding to it after its entry into force.

3. The Agreement shall be open for signature until 15 December 1957. Thereafter, it shall be open for accession.

4. Ratification or accession shall be effected by the depositing of an instrument with the Secretary-General of the United Nations.

Article 7

1. This agreement shall enter into force one month after the date on which the number of countries mentioned in article 6, paragraph 1, which have signed it without reservation of ratification or have deposited their instruments of ratification or accession has reached a total of five. However, the Annexes thereto shall not apply until six months after the entry into force of the Agreement itself.

2. For any country ratifying or acceding to this Agreement after five of the countries referred to in article 6, paragraph 1, have signed it without reservation of ratification or have deposited their instruments of ratification or accession, this Agreement shall enter into force one month after the said country has deposited its instrument of ratification or accession and the Annexes thereto shall apply for the said country either on the same date, if they are already in force by that date, or, if they are not in force by that date, on the date on which they apply under the provisions of paragraph 1 of this article.

Article 8

1. Any contracting Party may denounce this Agreement by so notifying the Secretary-General of the United Nations.

2. Denunciation shall take effect twelve months after the date of receipt by the Secretary-General of the notification of denunciation.

Article 9

1. This Agreement shall cease to have effect if, after its entry into force, the number of Contracting Parties is less than five during twelve consecutive months.

2. In the event of the conclusion of a worldwide agreement for the regulation of the transport of dangerous goods, any provision of this Agreement which is contrary to any provision of the said worldwide agreement shall, from the date on which the latter enters into force, automatically cease to apply to relations between the Parties to this Agreement which become parties to the worldwide agreement, and shall automatically be replaced by the relevant provision of the said worldwide agreement.

Article 10

1. Any country may, at the time of signing this Agreement without reservation of ratification or of depositing its instrument of ratification or accession or at any time thereafter, declare by notification addressed to the Secretary-General of the United Nations that this Agreement shall extend to all or any of the territories for the international relations of which it is responsible. The Agreement and the annexes thereto shall extend to the territory or territories named in the notification one month after it is received by the Secretary-General.

2. Any country which has made a declaration under paragraph 1 of this article extending this Agreement to any territory for whose international relations it is responsible may denounce the Agreement separately in respect of the said territory in accordance with the provisions of article 8.

Article 11

1. Any dispute between two or more Contracting Parties concerning the interpretation or application of this Agreement shall so far as possible be settled by negotiation between them.

2. Any dispute which is not settled by negotiation shall be submitted to arbitration if any one of the Contracting Parties in dispute so requests and shall be referred accordingly to one or more arbitrators selected by agreement between the Parties in dispute. If within three months from the date of the request for arbitration the Parties in dispute are unable to agree on the selection of an arbitrator or arbitrators, any of those Parties may request the Secretary-General of the United Nations to nominate a single arbitrator to whom the dispute shall be referred for decision.

3. The decision of the arbitrator or arbitrators appointed under paragraph 2 of this article shall be binding on the Contracting Parties in dispute.

Article 12

1. Each Contracting Party may, at the time of signing, ratifying, or acceding to, this Agreement, declare that it does not consider itself bound by article 11. Other Contracting Parties shall not be bound by article 11 in respect of any Contracting Party which has entered such a reservation.

2. Any Contracting Party having entered a reservation as provided for in paragraph 1 of this article may at any time withdraw such reservation by notifying the Secretary-General of the United Nations.

Article 13

1. After this Agreement has been in force for three years, any Contracting Party may, by notification to the Secretary-General of the United Nations, request that a conference be convened for the purpose of reviewing the text of the Agreement. The Secretary-General shall notify all Contracting Parties of the request and a review conference shall be convened by the Secretary-General if, within a period of four months following the date of notification by the Secretary-General, not less than one-fourth of the Contracting Parties notify him of their concurrence with the request.

2. If a conference is convened in accordance with paragraph 1 of this article, the Secretary-General shall notify all the Contracting Parties and invite them to submit within a period of three months such proposals as they may wish the Conference to consider. The Secretary-General shall circulate to all Contracting Parties the provisional agenda for the conference, together with the texts of such proposals, at least three months before the date on which the conference is to meet.

3. The Secretary-General shall invite to any conference convened in accordance with this article all countries referred to in article 6, paragraph 1, and countries which have become Contracting Parties under article 6, paragraph 2.

Article 14[1]

1. Independently of the revision procedure provided for in article 13, any Contracting Party may propose one or more amendments to the Annexes to this Agreement. To that end it shall transmit the text thereof to the Secretary-General of the United Nations. The Secretary-General may also propose amendments to the Annexes to this Agreement for the purpose of ensuring concordance between those Annexes and other international agreements concerning the carriage of dangerous goods.

2. The Secretary-General shall transmit any proposal made under paragraph 1 of this article to all Contracting Parties and inform thereof the other countries referred to in article 6, paragraph 1.

3. Any proposed amendment to the Annexes shall be deemed to be accepted unless, within three months from the date on which the Secretary-General circulates it, at least one-third of the Contracting Parties, or five of them if one-third exceeds that figure, have given the Secretary-General written notification of their objection to the proposed amendment. If the amendment is deemed to be accepted, it shall enter into force for all the Contracting Parties, on the expiry of a further period of three months, except in the following cases:

(a) In cases where similar amendments have been or are likely to be made to the other international agreements referred to in paragraph 1 of this article, the amendment shall enter into force on the expiry of a period the duration of which shall be determined by the Secretary-General in such a way as to allow, wherever possible, the simultaneous entry into force of the amendment and those that have been made or are likely to be made to such other agreements; such period shall not, however, be of less than one month's duration;

(b) The Contracting Party submitting the proposed amendment may specify in its proposal, for the purpose of entry into force of the amendment, should it be accepted, a period of more than three months' duration.

4. The Secretary-General shall, as soon as possible, notify all Contracting Parties and all the countries referred to in article 6, paragraph 1, of any objection which may be received from the Contracting Parties to a proposed amendment.

5. If the proposed amendment to the Annexes is not deemed to be accepted, but if at least one Contracting Party other than the Contracting Party which proposed the amendment has given the Secretary-General written notification of its agreement to the proposal, a meeting of all the Contracting Parties and all the countries referred to in article 6, paragraph 1, shall be convened by the Secretary-General within three months after the expiry of the period of three months within which, under paragraph 3 of this article, notification must be given of objection to the amendment. The Secretary-General may also invite to such meeting representatives of:

(a) intergovernmental organizations which are concerned with transport matters;

---

[1] *The text of Article 14, paragraph 3 incorporates a modification which entered into force on 19 April 1985 in accordance with a Protocol transmitted to Contracting Parties under cover of Depositary Notification C.N.229.1975.TREATIES-8 of 18 September 1975.*

(b) international non-governmental organizations whose activities are directly related to the transport of dangerous goods in the territories of the Contracting Parties.

6. Any amendment adopted by more than half the total number of Contracting Parties at a meeting convened in accordance with paragraph 5 of this article shall enter into force for all Contracting Parties in accordance with the procedure agreed at such meeting by the majority of the Contracting Parties attending it.

Article 15

In addition to the notifications provided for in articles 13 and 14, the Secretary-General of the United Nations shall notify the countries referred to in article 6, paragraph 1, and the countries which have become Contracting Parties under article 6, paragraph 2, of

(a) signatures, ratifications and accessions in accordance with article 6;

(b) the dates on which this Agreement and the Annexes thereto enter into force in accordance with article 7;

(c) denunciations in accordance with article 8;

(d) the termination of the Agreement in accordance with article 9;

(e) notifications and denunciations received in accordance with article 10;

(f) declarations and notifications received in accordance with article 12, paragraphs 1 and 2;

(g) the acceptance and date of entry into force of amendments in accordance with article 14, paragraphs 3 and 6.

Article 16

1. The Protocol of Signature of this Agreement shall have the same force, effect and duration as the Agreement itself, of which it shall be considered to be an integral part.

2. No reservation to this Agreement, other than those entered in the Protocol of Signature and those made in accordance with article 12, shall be permitted.

Article 17

After 15 December 1957, the original of this Agreement shall be deposited with the Secretary-General of the United Nations, who shall transmit certified true copies thereof to each of the countries referred to in article 6, paragraph 1.

IN WITNESS WHEREOF the undersigned, being duly authorized thereto, have signed this Agreement.

DONE at Geneva, this thirtieth day of September one thousand nine hundred and fifty-seven, in a single copy, in the English and French languages for the text of the Agreement proper, and in the French language for the Annexes, each text being equally authentic for the Agreement proper.

The Secretary-General of the United Nations is requested to prepare an authoritative translation of the Annexes in the English language and attach it to the certified true copies referred to in article 17.

PROTOCOL OF SIGNATURE

PROTOCOL OF SIGNATURE

TO THE EUROPEAN AGREEMENT ON THE INTERNATIONAL
CARRIAGE OF DANGEROUS GOODS BY ROAD (ADR)

On proceeding to sign the European Agreement on the International Carriage of Dangerous Goods by Road (ADR) the undersigned, duly authorized,

1. **CONSIDERING** that the conditions governing the carriage of dangerous goods by sea to or from the United Kingdom differ basically from those set forth in Annex A to ADR and that it is impossible to modify them so as to conform to the latter in the near future;

HAVING REGARD to the undertaking given by the United Kingdom to submit as an amendment to the said Annex A a special appendix containing special provisions for road-sea carriage of dangerous goods between the Continent and the United Kingdom;

HAVE AGREED that, until the entry into force of such special appendix, dangerous goods carried under ADR to or from the United Kingdom shall comply with the provisions of Annex A to ADR and also with the United Kingdom conditions for the carriage of dangerous goods by sea;

2. **TAKE NOTE OF** a declaration by the representative of France to the effect that the Government of the French Republic reserves the right, notwithstanding the provisions of article 4, paragraph 2, to refuse to allow vehicles in service on the territory of another Contracting Party, whatever the date on which they were put into service, to be used for the carriage of dangerous goods on French territory unless such vehicles comply either with the conditions laid down for such carriage in Annex B or with the conditions laid down for the carriage of the goods in question in the French regulations governing the carriage of dangerous goods by road;

3. **RECOMMEND** that, before submission in accordance with article 14, paragraph 1, or article 13, paragraph 2, proposed amendments to this Agreement or its Annexes shall as far as possible first be discussed at meetings of experts of the Contracting Parties and, if necessary, of the other countries mentioned in article 6, paragraph 1, of the Agreement and of the international organizations mentioned in article 14, paragraph 5, of the Agreement.

TABLE OF CONTENTS
VOLUME I

			Page
	European Agreement concerning the international carriage of dangerous goods by road		vi
	Protocol of signature		xii
Annex A	**General provisions and provisions concerning dangerous substances and articles**		1
Part 1	**General provisions**		3
	Chapter 1.1	**Scope and applicability**	5
	1.1.1	Structure	5
	1.1.2	Scope	5
	1.1.3	Exemptions	6
	1.1.4	Applicability of other regulations	10
	Chapter 1.2	**Definitions and units of measurement**	13
	1.2.1	Definitions	13
	1.2.2	Units of measurement	30
	Chapter 1.3	**Training of persons involved in the carriage of dangerous goods**	33
	1.3.1	Scope and applicability	33
	1.3.2	Nature of the training	33
	1.3.3	Documentation	34
	Chapter 1.4	**Safety obligations of the participants**	35
	1.4.1	General safety measures	35
	1.4.2	Obligations of the main participants	35
	1.4.3	Obligations of the other participants	37
	Chapter 1.5	**Derogations**	39
	1.5.1	Temporary derogations	39
	1.5.2	(Reserved)	39
	Chapter 1.6	**Transitional measures**	41
	1.6.1	General	41
	1.6.2	Receptacles for Class 2	42
	1.6.3	Fixed tanks (tank-vehicles), demountable tanks and battery-vehicles	42
	1.6.4	Tank-containers and MEGCs	44
	1.6.5	Vehicles	46
	1.6.6	Class 7	47

Table of contents (cont'd)

			Page
	Chapter 1.7	**General requirements concerning Class 7**	49
	1.7.1	General	49
	1.7.2	Radiation protection programme	49
	1.7.3	Quality assurance	50
	1.7.4	Special arrangement	51
	1.7.5	Radioactive material possessing other dangerous properties	51
	1.7.6	Non-compliance	51
	Chapter 1.8	**Checks and other support measures to ensure compliance with safety requirements**	53
	1.8.1	Administrative controls of dangerous goods	53
	1.8.2	Mutual administrative support	53
	1.8.3	Safety adviser	54
	1.8.4	List of competent authorities and bodies designated by them	60
	1.8.5	Notifications of occurrences involving dangerous goods	60
	Chapter 1.9	**Transport restrictions by the competent authorities**	67
	Chapter 1.10	**Security provisions**	69
	1.10.1	General provisions	69
	1.10.2	Security training	69
	1.10.3	Provisions for high consequence dangerous goods	69
	Appendix to Part 1 - List of competent authorities		73
Part 2	**Classification**		81
	Chapter 2.1	**General provisions**	83
	2.1.1	Introduction	83
	2.1.2	Principles of classification	84
	2.1.3	Classification of substances, including solutions and mixtures (such as preparations and wastes), not mentioned by name	85
	2.1.4	Classification of samples	90
	Chapter 2.2	**Class specific provisions**	91
	2.2.1	Class 1 Explosive substances and articles	91
	2.2.2	Class 2 Gases	111
	2.2.3	Class 3 Flammable liquids	120
	2.2.41	Class 4.1 Flammable solids, self-reactive substances and solid desensitized explosives	125
	2.2.42	Class 4.2 Substances liable to spontaneous combustion	136
	2.2.43	Class 4.3 Substances which, in contact with water, emit flammable gases	140
	2.2.51	Class 5.1 Oxidizing substances	144
	2.2.52	Class 5.2 Organic peroxides	149

Table of contents (cont'd)

Page

Chapter 2.2 Class specific provisions (cont'd)

2.2.61 Class 6.1 Toxic substances 163
2.2.62 Class 6.2 Infectious substances 176
2.2.7 Class 7 Radioactive material 182
2.2.8 Class 8 Corrosive substances 215
2.2.9 Class 9 Miscellaneous dangerous substances and articles 220

Chapter 2.3 Test methods 225

2.3.0 General 225
2.3.1 Exudation test for blasting explosives of Type A 225
2.3.2 Tests relating to nitrated cellulose mixtures of Class 4.1 227
2.3.3 Tests relating to flammable liquids of Classes 3, 6.1 and 8 228
2.3.4 Test for determining fluidity 230
2.3.5 Test for determining the ecotoxicity, persistence and bioaccumulation of substances in the aquatic environment for assignment to Class 9 232

Part 3 Dangerous goods list, special provisions and exemptions related to dangerous goods packed in limited quantities 237

Chapter 3.1 General 239

3.1.1 Introduction 239
3.1.2 Proper shipping name 239

Chapter 3.2 Dangerous goods list 243

3.2.1 Table A: Dangerous Goods List 243
3.2.2 Table B: Alphabetic index of substances and articles of ADR 548

TABLE OF CONTENTS

VOLUME II

			Page
Annex A (cont'd)	**General provisions and provisions concerning dangerous substances and articles**		1
Part 3 (cont'd)	**Dangerous goods list, special provisions and exemptions related to dangerous goods packed in limited quantities**		3
	Chapter 3.3	**Special provisions applicable to certain articles or substances**	5
	Chapter 3.4	**Exemptions related to dangerous goods packed in limited quantities**	31
	3.4.1	General requirements	31
	3.4.6	Table	33
Part 4	**Packing and tank provisions**		35
	Chapter 4.1	**Use of packagings, including intermediate bulk containers (IBCs) and large packagings**	37
	4.1.1	General provisions for the packing of dangerous goods in packagings, including IBCs and large packagings	37
	4.1.2	Additional general provisions for the use of IBCs	66
	4.1.3	General provisions concerning packing instructions	66
	4.1.4	List of packing instructions	69
	4.1.5	Special packing provisions for goods of Class 1	160
	4.1.6	Special packing provisions for goods of Class 2 and goods of other classes assigned to packing instruction P200	161
	4.1.7	Special packing provisions for organic peroxides (Class 5.2) and self-reactive substances of Class 4.1	164
	4.1.8	Special packing provisions for infectious substances (Class 6.2)	166
	4.1.9	Special packing provisions for Class 7	167
	4.1.10	Special provisions for mixed packing	168
	Chapter 4.2	**Use of portable tanks and UN multiple-element gas containers (MEGCs)**	175
	4.2.1	General provisions for the use of portable tanks for the carriage of substances of Class 1 and Classes 3 to 9	175
	4.2.2	General provisions for the use of portable tanks for the carriage of non-refrigerated liquefied gases	180
	4.2.3	General provisions for the use of portable tanks for the carriage of refrigerated liquefied gases	181
	4.2.4	General provisions for the use of UN multiple-element gas containers (MEGCs)	183
	4.2.5	Portable tank instructions and special provisions	184

Page

Chapter 4.3 **Use of fixed tanks (tank-vehicles), demountable tanks, tank-containers and tank swap bodies with shells made of metallic materials, and battery-vehicles and multiple-element gas containers (MEGCs)** 199

4.3.1 Scope 199
4.3.2 Provisions applicable to all classes 199
4.3.3 Special provisions applicable to Class 2 203
4.3.4 Special provisions applicable to Classes 3 to 9 212
4.3.5 Special provisions 219

Chapter 4.4 **Use of fibre-reinforced plastics (FRP) tanks, fixed-tanks (tank-vehicles), demountable tanks, tank containers and tank swap bodies** 223

4.4.1 General 223
4.4.2 Operation 223

Chapter 4.5 **Use of vacuum operated waste tanks** 225

4.5.1 Use 225
4.5.2 Operation 225

Part 5 **Consignment procedures** 227

Chapter 5.1 **General provisions** 229

5.1.1 Application and general provisions 229
5.1.2 Use of overpacks 229
5.1.3 Empty uncleaned packagings (including IBCs and large packagings), tanks, vehicles and containers for carriage in bulk 229
5.1.4 Mixed packing 230
5.1.5 General provisions for Class 7 230

Chapter 5.2 **Marking and labelling** 237

5.2.1 Marking of packages 237
5.2.2 Labelling of packages 239

Chapter 5.3 **Placarding and marking of containers, MEGCs, tank-containers, portable tanks and vehicles** 247

5.3.1 Placarding 247
5.3.2 Orange-coloured plate marking 250
5.3.3 Mark for elevated temperature substances 255

Chapter 5.4 **Documentation** 257

5.4.1 Dangerous goods transport document and related information 257
5.4.2 Container packing certificate 264
5.4.3 Instructions in writing 265
5.4.4 Example of a multimodal dangerous goods form 268

Table of contents (cont'd)

			Page
Chapter 5.5		**Special provisions**	271
	5.5.1	Special provisions for the consignment of infectious substances	271
	5.5.2	Special provisions for fumigated vehicles, containers and tanks	271
Part 6		**Requirements for the construction and testing of packagings, intermediate bulk containers (IBCs), large packagings, tanks and bulk containers**	273
Chapter 6.1		**Requirements for the construction and testing of packagings**	275
	6.1.1	General	275
	6.1.2	Code for designating types of packagings	276
	6.1.3	Marking	279
	6.1.4	Requirements for packagings	283
	6.1.5	Test requirements for packagings	295
	6.1.6	Standard liquids for verifying the chemical compatibility testing of high or medium molecular mass polyethylene packagings, including IBCs, in accordance with 6.1.5.2.6 and 6.5.4.3.5, respectively	306
Chapter 6.2		**Requirements for the construction and testing of pressure receptacles, aerosol dispensers and small receptacles containing gas (gas cartridges)**	309
	6.2.1	General requirements	309
	6.2.2	Pressure receptacles designed, constructed and tested according to standards	320
	6.2.3	Requirements for pressure receptacles not designed, constructed and tested according to standards	323
	6.2.4	General requirements for aerosol dispensers and small receptacles containing gas (gas cartridges)	326
	6.2.5	Requirements for UN pressure receptacles	327
Chapter 6.3		**Requirements for the construction and testing of packagings for Class 6.2 substances**	343
	6.3.1	General	343
	6.3.2	Test requirements for packagings	343
	6.3.3	Test report	347
Chapter 6.4		**Requirements for the construction, testing and approval of packages and material of Class 7**	349
	6.4.1	(Reserved)	349
	6.4.2	General requirements	349
	6.4.3	(Reserved)	350
	6.4.4	Requirements for excepted packages	350
	6.4.5	Requirements for Industrial packages	350
	6.4.6	Requirements for packages containing uranium hexafluoride	351
	6.4.7	Requirements for Type A packages	352

Table of contents (cont'd)

		Page
6.4.8	Requirements for Type B(U) packages	354
6.4.9	Requirements for Type B(M) packages	356
6.4.10	Requirements for Type C packages	356
6.4.11	Requirements for packages containing fissile material	356
6.4.12	Test procedures and demonstration of compliance	360
6.4.13	Testing the integrity of the containment system and shielding and evaluating criticality safety	361
6.4.14	Target for drop tests	361
6.4.15	Tests for demonstrating ability to withstand normal conditions of carriage	361
6.4.16	Additional tests for Type A packages designed for liquids and gases	362
6.4.17	Tests for demonstrating ability to withstand accident conditions in carriage	363
6.4.18	Enhanced water immersion test for Type B(U) and Type B(M) packages containing more than 10^5 A_2 and Type C packages	364
6.4.19	Water leakage test for packages containing fissile material	364
6.4.20	Tests for Type C packages	364
6.4.21	Inspections for packagings designed to contain 0.1 kg or more of uranium hexafluoride	365
6.4.22	Approvals of package designs and materials	366
6.4.23	Applications and approvals for radioactive material carriage	367
Chapter 6.5	**Requirements for the construction and testing of intermediate bulk containers (IBCs)**	377
6.5.1	General requirements applicable to all types of IBCs	377
6.5.2	Marking	381
6.5.3	Specific requirements for IBCs	384
6.5.4	Test requirements for IBCs	391
Chapter 6.6	**Requirements for the construction and testing of large packagings**	403
6.6.1	General	403
6.6.2	Code for designating types of large packagings	403
6.6.3	Marking	404
6.6.4	Specific requirements for large packagings	405
6.6.5	Test requirements for large packagings	408
Chapter 6.7	**Requirements for the design, construction, inspection and testing of portable tanks and UN multiple-element gas containers (MEGCs)**	413
6.7.1	Application and general requirements	413
6.7.2	Requirements for the design, construction, inspection and testing of portable tanks intended for the carriage of substances of Class 1 and Classes 3 to 9	413
6.7.3	Requirements for the design, construction, inspection and testing of portable tanks intended for the carriage of non-refrigerated liquefied gases	431

Page

6.7.4 Requirements for the design, construction, inspection and testing of portable tanks intended for the carriage of refrigerated liquefied gases 446
6.7.5 Requirements for the design, construction, inspection and testing of UN multiple-element gas containers (MEGCs) intended for the carriage of non–refrigerated gases 458

Chapter 6.8 Requirements for the construction, equipment, type approval, inspections and tests, and marking of fixed tanks (tank-vehicles), demountable tanks and tank-containers and tank swap bodies, with shells made of metallic materials, and battery-vehicles and multiple element gas containers (MEGCs) 467

6.8.1 Scope 467
6.8.2 Requirements applicable to all classes 467
6.8.3 Special requirements applicable to Class 2 486
6.8.4 Special provisions 496
6.8.5 Requirements concerning the materials and construction of fixed welded tanks, demountable welded tanks, and welded shells of tank-containers for which a test pressure of not less than 1 MPa (10 bar) is required, and of fixed welded tanks, demountable welded tanks and welded shells of tank-containers intended for the carriage of refrigerated liquefied gases of Class 2 502

Chapter 6.9 Requirements for the design, construction, equipment, type approval, testing and marking of fibre-reinforced plastics (FRP) fixed tanks (tank-vehicles), demountable tanks, tank-containers and tank swap bodies 507

6.9.1 General 507
6.9.2 Construction 507
6.9.3 Items of equipment 512
6.9.4 Type testing and approval 512
6.9.5 Inspections 514
6.9.6 Marking 514

Chapter 6.10 Requirements for the construction, equipment, type approval, inspection and marking of vacuum-operated waste tanks 515

6.10.1 General 515
6.10.2 Construction 515
6.10.3 Items of equipment 516
6.10.4 Inspection 518

Chapter 6.11 Requirements for the design, construction, inspection and testing of bulk containers 519

6.11.1 Definitions 519
6.11.2 Application and general requirements 519

Page

6.11.3 Requirements for the design, construction, inspection and testing of containers conforming to the CSC used as bulk containers 519
6.11.4 Requirements for the design, construction and approval of bulk containers other than containers conforming to the CSC..... 521

Part 7 Provisions concerning the conditions of carriage, loading, unloading and handling 523

Chapter 7.1 General provisions 525

Chapter 7.2 Provisions concerning carriage in packages 527

Chapter 7.3 Provisions concerning carriage in bulk 531

7.3.1 General provisions 531
7.3.2 Additional provisions for the carriage in bulk of goods of Classes 4.2, 4.3, 5.1, 6.2, 7 and 8 when the provisions of 7.3.1.1 (a) are applied 533
7.3.3 Special provisions for the carriage in bulk when the provisions of 7.3.1.1 (b) are applied 534

Chapter 7.4 Provisions concerning carriage in tanks 537

Chapter 7.5 Provisions concerning loading, unloading and handling 539

7.5.1 General provisions concerning loading, unloading and handling 539
7.5.2 Mixed loading prohibition 539
7.5.3 (Reserved) 542
7.5.4 Precautions with respect to foodstuffs, other articles of consumption and animal feeds 542
7.5.5 Limitation of the quantities carried 542
7.5.6 (Reserved) 543
7.5.7 Handling and stowage 543
7.5.8 Cleaning after unloading 544
7.5.9 Prohibition of smoking 544
7.5.10 Precautions against electrostatic charges 544
7.5.11 Additional provisions applicable to certain classes or specific goods 544

Annex B Provisions concerning transport equipment and transport operations 553

Part 8 Requirements for vehicle crews, equipment, operation and documentation 555

Chapter 8.1 General requirements concerning transport units and equipment on board 557

Table of contents (cont'd)

			Page
	8.1.1	Transport units	557
	8.1.2	Documents to be carried on the transport unit	557
	8.1.3	Placarding and marking	557
	8.1.4	Fire-fighting equipment	558
	8.1.5	Miscellaneous equipment	559
Chapter 8.2		**Requirements concerning the training of the vehicle crew**	561
	8.2.1	General requirements concerning the training of drivers	561
	8.2.2	Special requirements concerning the training of drivers	562
	8.2.3	Training of persons, other than the drivers holding a certificate in accordance with 8.2.1, involved in the carriage of dangerous goods by road	567
Chapter 8.3		**Miscellaneous requirements to be complied with by the vehicle crew**	569
	8.3.1	Passengers	569
	8.3.2	Use of fire-fighting appliances	569
	8.3.3	Prohibition on opening packages	569
	8.3.4	Portable lighting apparatus	569
	8.3.5	Prohibition on smoking	569
	8.3.6	Running the engine during loading or unloading	569
	8.3.7	Use of the parking brake	569
Chapter 8.4		**Requirements concerning the supervision of vehicles**	571
Chapter 8.5		**Additional requirements relating to particular classes or substances**	573
Part 9		**Requirements concerning the construction and approval of vehicles**	579
Chapter 9.1		**Scope, definitions and requirements for the approval of vehicles**	581
	9.1.1	Scope and definitions	581
	9.1.2	Approval of EX/II, EX/III, FL, OX and AT vehicles	582
	9.1.3	Certificate of approval	583
Chapter 9.2		**Requirements concerning the construction of vehicles**	587
	9.2.2	Electrical equipment	590
	9.2.3	Braking equipment	593
	9.2.4	Prevention of fire risks	593
	9.2.5	Speed limitation device	595
	9.2.6	Coupling devices of trailers	595

Table of contents (cont'd)

		Page
Chapter 9.3	**Additional requiremexnts concerning complete or completed EX/II or EX/III vehicles**	597
9.3.1	Materials to be used in the construction of vehicle bodies	597
9.3.2	Combustion heaters	597
9.3.3	EX/II vehicles	597
9.3.4	EX/III vehicles	597
9.3.5	Engine and load compartment	598
9.3.6	External heat sources and load compartment	598
9.3.7	Electrical equipment	598
Chapter 9.4	**Additional requirements concerning the construction of the bodies of complete or completed vehicles intended for the carriage of dangerous goods in packages (other than EX/II and EX/III vehicles)**	599
Chapter 9.5	**Additional requirements concerning the construction of the bodies of complete or completed vehicles intended for the carriage of dangerous solids in bulk**	601
Chapter 9.6	**Additional requirements concerning complete or completed vehicles intended for the carriage of temperature controlled substances**	603
Chapter 9.7	**Additional requirements concerning fixed tanks (tank-vehicles), battery-vehicles and complete or completed vehicles used for the carriage of dangerous goods in demountable tanks with a capacity greater than 1 m^3 or in tank-containers, portable tanks or MEGCs of a capacity greater than 3 m^3 (FL, OX and AT vehicles)**	605
9.7.1	General provisions	605
9.7.2	Requirements concerning tanks	605
9.7.3	Fastenings	605
9.7.4	Earthing of FL vehicles	605
9.7.5	Stability of tank-vehicles	606
9.7.6	Rear protection of vehicles	606
9.7.7	Combustion heaters	606
9.7.8	Electrical equipment	607

ANNEX A

GENERAL PROVISIONS AND PROVISIONS CONCERNING DANGEROUS SUBSTANCES AND ARTICLES

PART 1

General provisions

CHAPTER 1.1

SCOPE AND APPLICABILITY

1.1.1 Structure

Annexes A and B of ADR are grouped into nine parts. Annex A consists of Parts 1 to 7, and Annex B of Parts 8 and 9. Each part is subdivided into chapters and each chapter into sections and sub-sections. Within each part the number of the part is included with the numbers of the chapters, sections and sub-sections, for example Part 4, Chapter 2, Section 1 is numbered "4.2.1".

1.1.2 Scope

1.1.2.1 For the purposes of Article 2 of ADR, Annex A specifies:

(a) dangerous goods which are barred from international carriage;

(b) dangerous goods which are authorized for international carriage and the conditions attaching to them (including exemptions) particularly with regard to:

- classification of goods, including classification criteria and relevant test methods;
- use of packagings (including mixed packing);
- use of tanks (including filling);
- consignment procedures (including marking and labelling of packages and placarding and marking of means of transport as well as documentation and information required);
- provisions concerning the construction, testing and approval of packagings and tanks;
- use of means of transport (including loading, mixed loading and unloading).

1.1.2.2 Annex A contains certain provisions which, according to Article 2 of ADR, pertain to Annex B or to both Annexes A and B, as follows:

1.1.1	Structure
1.1.2.3	(Scope of Annex B)
1.1.2.4	
1.1.3.1	Exemptions related to the nature of the transport operation
1.1.3.6	Exemptions related to quantities carried per transport unit
1.1.4	Applicability of other regulations
1.1.4.5	Carriage other than by road
Chapter 1.2	Definitions and units of measurements
Chapter 1.3	Training of persons involved in the carriage of dangerous goods
Chapter 1.4	Safety obligations of the participants
Chapter 1.5	Derogations
Chapter 1.6	Transitional measures
Chapter 1.8	Checks and other support measures to ensure compliance with safety requirements

Chapter 1.9 Transport restrictions by the competent authorities
Chapter 1.10 Security provisions
Chapter 3.1 General
Chapter 3.2 Columns (1), (2), (14), (15) and (19) (application of provisions of Parts 8 and 9 to individual substances or articles).

1.1.2.3 For the purposes of Article 2 of ADR, Annex B specifies the conditions regarding the construction, equipment and operation of vehicles carrying dangerous goods authorized for carriage:

- requirements for vehicle crews, equipment, operation and documentation;

- requirements concerning the construction and approval of vehicles.

1.1.2.4 In Article 1(c) of ADR, the word "vehicles" need not refer to one and the same vehicle. An international transport operation may be performed by several different vehicles provided that the operation takes place on the territory of at least two Contracting Parties to ADR between the consignor and the consignee indicated in the transport document.

1.1.3 Exemptions

1.1.3.1 ***Exemptions related to the nature of the transport operation***

The provisions laid down in ADR do not apply to:

(a) the carriage of dangerous goods by private individuals where the goods in question are packaged for retail sale and are intended for their personal or domestic use or for their leisure or sporting activities provided that measures have been taken to prevent any leakage of contents in normal conditions of carriage. Dangerous goods in IBCs, large packagings or tanks are not considered to be packaged for retail sale;

(b) the carriage of machinery or equipment not specified in this Annex and which happen to contain dangerous goods in their internal or operational equipment, provided that measures have been taken to prevent any leakage of contents in normal conditions of carriage;

(c) the carriage undertaken by enterprises which is ancillary to their main activity, such as deliveries to or returns from building or civil engineering sites, or in relation to surveying, repairs and maintenance, in quantities of not more than 450 litres per packaging and within the maximum quantities specified in 1.1.3.6. Measures shall be taken to prevent any leakage of contents in normal conditions of carriage. These exemptions do not apply to Class 7.

Carriage undertaken by such enterprises for their supply or external or internal distribution does not fall within the scope of this exemption;

(d) the carriage undertaken by, or under the supervision of, the emergency services, in particular by breakdown vehicles carrying vehicles which have been involved in accidents or have broken down and contain dangerous goods;

(e) emergency transport intended to save human lives or protect the environment provided that all measures are taken to ensure that such transport is carried out in complete safety.

NOTE: *For radioactive material see 2.2.7.1.2.*

1.1.3.2 ***Exemptions related to the carriage of gases***

The provisions laid down in ADR do not apply to the carriage of:

(a) gases contained in the tanks of a vehicle, performing a transport operation and destined for its propulsion or for the operation of any of its equipment (e.g. refrigerating equipment);

(b) gases contained in the fuel tanks of vehicles transported. The fuel cock between gas tank and engine shall be closed and the electric contact open;

(c) gases of Groups A and O (according to 2.2.2.1), if the pressure of the gas in the receptacle or tank at a temperature of 15 °C does not exceed 200 kPa (2 bar) and if the gas is completely in the gaseous state during carriage. This includes every kind of receptacle or tank, e.g. also parts of machinery and apparatus;

(d) gases contained in the equipment used for the operation of the vehicle (e.g. fire extinguishers or inflated pneumatic tyres, even as spare parts or as a load);

(e) gases contained in the special equipment of vehicles and necessary for the operation of this special equipment during transport (cooling systems, fish-tanks, heaters, etc.) as well as spare receptacles for such equipment or uncleaned empty exchange receptacles, transported in the same transport unit;

(f) uncleaned empty static pressure vessels which are carried, on condition that all openings with the exception of pressure relief devices (when fitted) are hermetically closed; and

(g) gases contained in foodstuffs or beverages.

1.1.3.3 ***Exemptions related to the carriage of liquid fuels***

The provisions laid down in ADR do not apply to the carriage of:

(a) fuel contained in the tanks of a vehicle performing a transport operation and destined for its propulsion or for the operation of any of its equipment.

The fuel may be carried in fixed fuel tanks, directly connected to the vehicle's engine and/or auxiliary equipment, which comply with the pertinent legal provisions, or may be carried in portable fuel containers (such as jerricans).

The total capacity of the fixed tanks shall not exceed 1500 litres per transport unit and the capacity of a tank fitted to a trailer shall not exceed 500 litres. A maximum of 60 litres per transport unit may be carried in portable fuel containers. These restrictions shall not apply to vehicles operated by the emergency services;

(b) fuel contained in the tanks of vehicles or of other means of conveyance (such as boats) which are carried as a load, where it is destined for their propulsion or the operation of any of their equipment. Any fuel cocks between the engine or equipment and the fuel tank shall be closed during carriage unless it is essential for the equipment to remain operational. Where appropriate, the vehicles or other means of conveyance shall be loaded upright and secured against falling.

1.1.3.4 ***Exemptions related to special provisions or to dangerous goods packed in limited quantities***

NOTE: *For radioactive material see 2.2.7.1.2.*

1.1.3.4.1 Certain special provisions of Chapter 3.3 exempt partially or totally the carriage of specific dangerous goods from the requirements of ADR. The exemption applies when the special provision is referred to in Column (6) of Table A of Chapter 3.2 against the dangerous goods entry concerned.

1.1.3.4.2 Certain dangerous goods packed in limited quantities may be subject to exemptions provided that the conditions of Chapter 3.4 are met.

1.1.3.5 ***Exemptions related to empty uncleaned packagings***

Empty uncleaned packagings (including IBCs and large packagings) which have contained substances of Classes 2, 3, 4.1, 5.1, 6.1, 8 and 9 are not subject to the conditions of ADR if adequate measures have been taken to nullify any hazard. Hazards are nullified if adequate measures have been taken to nullify all hazards of Classes 1 to 9.

1.1.3.6 ***Exemptions related to quantities carried per transport unit***

1.1.3.6.1 For the purposes of this sub-section, dangerous goods are assigned to transport categories 0, 1, 2, 3, or 4, as indicated in Column (15) of Table A of Chapter 3.2. Empty uncleaned packagings having contained substances assigned to transport category "0" are also assigned to transport category "0". Empty uncleaned packagings having contained substances assigned to a transport category other than "0" are assigned to transport category "4".

1.1.3.6.2 Where the quantity of dangerous goods carried on a transport unit does not exceed the values indicated in column (3) of the table in 1.1.3.6.3 for a given transport category (when the dangerous goods carried in the transport unit belong to the same category) or the value calculated in accordance with 1.1.3.6.4 (when the dangerous goods carried in the transport unit belong to different transport categories), they may be carried in packages in one transport unit without application of the following provisions:

- Chapter 1.10;
- Chapter 5.3;
- Section 5.4.3;
- Chapter 7.2, except for V5, V7 and V8 of 7.2.4;
- CV1 of 7.5.11;
- Part 8 except for 8.1.2.1 (a) and (c),
  8.1.4.2 to 8.1.4.5,
  8.2.3,
  8.3.3,
  8.3.4,
  8.3.5,
  Chapter 8.4,
  S1(3) and (6),
  S2(1),
  S4 and
  S14 to S21 of Chapter 8.5;
- Part 9;

NOTE: *For the information in the transport document see 5.4.1.1.10.*

1.1.3.6.3 Where the dangerous goods carried in the transport unit belong to the same category, the maximum total quantity per transport unit is indicated in column (3) of the table below.

Transport category **(1)**	**Substances or articles packing group or classification code/group or UN No.** **(2)**	**Maximum total quantity per transport unit** **(3)**
0	Class 1: 1.1A/1.1L/1.2L/1.3L/1.4L and UN No. 0190 Class 3: UN No. 3343 Class 4.2: Substances belonging to packing group I Class 4.3: UN Nos. 1183, 1242, 1295, 1340, 1390, 1403, 1928, 2813, 2965, 2968, 2988, 3129, 3130, 3131, 3134, 3148, 3396, 3398 and 3399 Class 6.1: UN Nos. 1051, 1613, 1614 and 3294 Class 6.2: UN Nos. 2814 and 2900 Class 7: UN Nos. 2912 to 2919, 2977, 2978 and 3321 to 3333 Class 9: UN Nos. 2315, 3151, 3152 and 3432 and equipment containing such substances or mixtures and empty uncleaned packagings, except those classified under UN No. 2908, having contained substances classified in this transport category.	0
1	Substances and articles belonging to packing group I and not classified in transport category 0 and substances and articles of the following classes: Class 1: 1.1B to 1.1J [a] /1.2B to 1.2J/1.3C/1.3G/1.3H/1.3J/1.5D [a] Class 2: groups T, TC [a], TO, TF, TOC and TFC aerosols: groups C, CO, FC, T, TF, TC, TO, TFC and TOC Class 4.1: UN Nos. 3221 to 3224 and 3231 to 3240 Class 5.2: UN Nos. 3101 to 3104 and 3111 to 3120	20
2	Substances or articles belonging to packing group II and not classified in transport categories 0, 1 or 4 and substances of the following classes: Class 1: 1.4B to 1.4G and 1.6N Class 2: group F aerosols: group F Class 4.1: UN Nos. 3225 to 3230 Class 5.2: UN Nos. 3105 to 3110 Class 6.1: substances and articles belonging to packing group III Class 9: UN No. 3245	333
3	Substances and articles belonging to packing group III and not classified in transport categories 0, 2 or 4 and substances and articles of the following classes: Class 2: groups A and O aerosols: groups A and O Class 8: UN Nos. 2794, 2795, 2800 and 3028 Class 9: UN Nos. 2990 and 3072	1 000
4	Class 1: 1.4S Class 4.1: UN Nos. 1331,1345,1944,1945,2254 and 2623 Class 4.2: UN Nos. 1361 and 1362 packing group III Class 7: UN Nos. 2908 to 2911 Class 9: UN No. 3268 and empty, uncleaned packagings having contained dangerous goods, except for those classified in transport category 0	unlimited

[a] *For UN Nos. 0081, 0082, 0084, 0241, 0331, 0332, 0482, 1005 and 1017, the total maximum quantity per transport unit shall be 50 kg.*

In the above table, "maximum total quantity per transport unit" means:

- for articles, gross mass in kilograms (for articles of Class 1, net mass in kg of the explosive substance);

- for solids, liquefied gases, refrigerated liquefied gases and dissolved gases, net mass in kilograms;

- for liquids and compressed gases, nominal capacity of receptacles (see definition in 1.2.1) in litres.

1.1.3.6.4 Where dangerous goods of different transport categories are carried in the same transport unit, the sum of

- the quantity of substances and articles of transport category 1 multiplied by "50",

- the quantity of substances and articles of transport category 1 referred to in Note a to the table in 1.1.3.6.3 multiplied by "20";

- the quantity of substances and articles of transport category 2 multiplied by "3", and

- the quantity of substances and articles of transport category 3

shall not exceed "1 000".

1.1.3.6.5 For the purposes of this sub-section, dangerous goods exempted in accordance with 1.1.3.2 to 1.1.3.5 shall not be taken into account.

1.1.4 Applicability of other regulations

1.1.4.1 ***(Reserved)***

1.1.4.2 ***Carriage in a transport chain including maritime or air carriage***

1.1.4.2.1 Packages, containers, portable tanks and tank-containers, which do not entirely meet the requirements for packing, mixed packing, marking, labelling of packages or placarding and orange plate marking, of ADR, but are in conformity with the requirements of the IMDG Code or the ICAO Technical Instructions shall be accepted for carriage in a transport chain including maritime or air carriage subject to the following conditions:

(a) If the packages are not marked and labelled in accordance with ADR, they shall bear markings and danger labels in accordance with the requirements of the IMDG Code or the ICAO Technical Instructions;

(b) The requirements of the IMDG Code or the ICAO Technical Instructions shall be applicable to mixed packing within a package;

(c) For carriage in a transport chain including maritime carriage, if the containers, portable tanks or tank-containers are not marked and placarded in accordance with Chapter 5.3 of this Annex, they shall be marked and placarded in accordance with Chapter 5.3 of the IMDG Code. In such case, only 5.3.2.1.1 of this Annex is applicable to the marking of the vehicle itself. For empty, uncleaned portable tanks and tank-containers, this requirement shall apply up to and including the subsequent transfer to a cleaning station.

This derogation does not apply in the case of goods classified as dangerous goods in classes 1 to 8 of ADR and considered as non-dangerous goods according to the applicable requirements of the IMDG Code or the ICAO Technical Instructions.

1.1.4.2.2 For carriage in a transport chain including maritime or air carriage, the information required under 5.4.1 and 5.4.2 and under any special provision of Chapter 3.3 may be substituted by the transport document and information required by the IMDG Code or the ICAO Technical Instructions respectively except that, when additional information is required by ADR, it shall be added or entered at the appropriate place.

***NOTE*:** *For carriage in accordance with 1.1.4.2.1, see also 5.4.1.1.7. For carriage in containers, see also 5.4.2.*

1.1.4.3 ***Use of portable tanks approved for maritime transport***

Portable tanks which do not meet the requirements of Chapters 6.7 or 6.8, but which have been built and approved before 1 January 2003 in accordance with the provisions (including transitional provisions) of the IMDG Code (Amdt. 29-98) may be used until 31 December 2009 provided they are found to meet the applicable inspection and test provisions of the IMDG Code (Amdt. 29-98) and that the instructions referred to in Columns (12) and (14) of Chapter 3.2 of the IMDG Code (Amdt. 30-00) are fully complied with. They may continue to be used after 31 December 2009 if they meet the applicable inspection and test provisions of the IMDG Code, but provided that the instructions of Columns (10) and (11) of Chapter 3.2 of ADR and of Chapter 4.2 are complied with.

1.1.4.4 ***(Reserved)***

1.1.4.5 ***Carriage other than by road***

1.1.4.5.1 If the vehicle carrying out a transport operation subject to the requirements of ADR is conveyed over a section of the journey otherwise than by road haulage, then any national or international regulations which, on the said section, govern the carriage of dangerous goods by the mode of transport used for conveying the road vehicle shall alone be applicable to the said section of the journey.

1.1.4.5.2 In the cases referred to in 1.1.4.5.1 above, the involved ADR Contracting Parties may agree to apply the requirements of ADR to the section of a journey where a vehicle is conveyed otherwise than by road haulage, supplemented, if they consider it necessary, by additional requirements, unless such agreements between the involved ADR Contracting Parties would contravene clauses of the international conventions governing the carriage of dangerous goods by the mode of transport used for conveying the road vehicle on the said section of the journey, e.g. the International Convention for the Safety of Life at Sea (SOLAS), to which these ADR Contacting Parties would also be contracting parties.

These agreements shall be notified by the Contracting Party which has taken the initiative thereof to the Secretariat of the United Nations Economic Commission for Europe which shall bring them to the attention of the Contracting Parties.

1.1.4.5.3 In cases where a transport operation subject to the provisions of ADR is likewise subject over the whole or a part of the road journey to the provisions of an international convention which regulates the carriage of dangerous goods by a mode of transport other than road carriage by virtue of clauses extending the applicability of that convention to certain motor-vehicle services, then the provisions of that international convention shall apply over the journey in question concurrently with those of ADR which are not incompatible with them; the other clauses of ADR shall not apply over the journey in question.

CHAPTER 1.2

DEFINITIONS AND UNITS OF MEASUREMENT

1.2.1 Definitions

NOTE: *This section contains all general or specific definitions.*

For the purposes of ADR:

A

"Aerosol or *aerosol dispenser"* means any non-refillable receptacle meeting the requirements of 6.2.4, made of metal, glass or plastics and containing a gas, compressed, liquefied or dissolved, with or without a liquid, paste or powder, and fitted with a release device allowing the contents to be ejected as solid or liquid particles in suspension in a gas, as a foam, paste or powder or in a liquid state or in a gaseous state;

B

"Bag" means a flexible packaging made of paper, plastics film, textiles, woven material or other suitable material;

"Battery-vehicle" means a vehicle containing elements which are linked to each other by a manifold and permanently fixed to a transport unit. The following elements are considered to be elements of a battery-vehicle: cylinders, tubes, bundles of cylinders (also known as frames), pressure drums as well as tanks destined for the carriage of gases of Class 2 with a capacity of more than 450 litres;

"Body" (for all categories of IBC other than composite IBCs) means the receptacle proper, including openings and closures, but does not include service equipment;

"Box" means a packaging with complete rectangular or polygonal faces, made of metal, wood, plywood, reconstituted wood, fibreboard, plastics or other suitable material. Small holes for purposes of ease of handling or opening or to meet classification requirements, are permitted as long as they do not compromise the integrity of the packaging during carriage;

"Bulk containers" means containment systems (including any liner or coating) intended for the carriage of solid substances which are in direct contact with the containment system. Packagings, intermediate bulk containers (IBCs), large packagings and tanks are not included.

Bulk containers are:

- of a permanent character and accordingly strong enough to be suitable for repeated use;
- specially designed to facilitate the carriage of goods by one or more modes of carriage without intermediate reloading;
- fitted with devices permitting its ready handling;
- of a capacity of not less than 1.0 m^3;

Examples of bulk containers are containers, offshore bulk containers, skips, bulk bins, swap bodies, trough-shaped containers, roller containers, load compartments of vehicles;

"Bundle of cylinders" means an assembly of cylinders that are fastened together and which are interconnected by a manifold and carried as a unit. The total water capacity shall not exceed 3 000 litres except that bundles intended for the carriage of toxic gases of Class 2 (groups starting with letter T according to 2.2.2.1.3) shall be limited to 1 000 litres water capacity;

C

"Calculation pressure" means a theoretical pressure at least equal to the test pressure which, according to the degree of danger exhibited by the substance being carried, may to a greater or lesser degree exceed the working pressure. It is used solely to determine the thickness of the walls of the shell, independently of any external or internal reinforcing device (see also *"Discharge pressure", "Filling pressure", "Maximum working pressure (gauge pressure)"* and *"Test pressure"*);

NOTE: *For portable tanks, see Chapter 6.7.*

"Carriage" means the change of place of dangerous goods, including stops made necessary by transport conditions and including any period spent by the dangerous goods in vehicles, tanks and containers made necessary by traffic conditions before, during and after the change of place.

This definition also covers the intermediate temporary storage of dangerous goods in order to change the mode or means of transport (transshipment). This shall apply provided that transport documents showing the place of dispatch and the place of reception are presented on request and provided that packages and tanks are not opened during intermediate storage, except to be checked by the competent authorities;

"Carriage in bulk" means the carriage of unpackaged solids or articles in vehicles or containers. The term does not apply to packaged goods nor to substances carried in tanks;

"Carrier" means the enterprise which carries out the transport operation with or without a transport contract;

"Closed container" means a totally enclosed container having a rigid roof, rigid side walls, rigid end walls and a floor. The term includes containers with an opening roof where the roof can be closed during transport;

"Closed vehicle" means a vehicle having a body capable of being closed;

"Closure" means a device which closes an opening in a receptacle;

"Collective entry" means an entry for a well defined group of substances or articles (see 2.1.1.2, B, C and D);

"Combination packaging" means a combination of packagings for transport purposes, consisting of one or more inner packagings secured in an outer packing in accordance with 4.1.1.5;

NOTE: *The "inners" of "combination packagings" are always termed "inner packagings" and not "inner receptacles". A glass bottle is an example of such an "inner packaging".*

"Combustion heater" means a device directly using liquid or gaseous fuel and not using the waste heat from the engine used for propulsion of the vehicle;

"Competent authority" means the authority or authorities or any other body or bodies designated as such in each State and in each specific case in accordance with domestic law;

"Compliance assurance" (radioactive material) means a systematic programme of measures applied by a competent authority which is aimed at ensuring that the requirements of ADR are met in practice;

"Composite IBC with plastics inner receptacle" means an IBC comprising structural equipment in the form of a rigid outer casing encasing a plastics inner receptacle together with any service or other structural equipment. It is so constructed that the inner receptacle and outer casing once assembled form, and are used as, an integrated single unit to be filled, stored, transported or emptied as such;

***NOTE**: "Plastics", when used in connection with inner receptacles for composite IBCs, is taken to include other polymeric materials such as rubber, etc.*

"Composite packaging (plastics material)" is a packaging consisting of an inner plastics receptacle and an outer packaging (made of metal, fibreboard, plywood, etc.). Once assembled such a packaging remains thereafter an inseparable unit; it is filled, stored, despatched and emptied as such;

***NOTE:** See **NOTE** under "Composite packagings (glass, porcelain or stoneware)".*

"Composite packaging (glass, porcelain or stoneware)" is a packaging consisting of an inner glass, porcelain or stoneware receptacle and an outer packaging (made of metal, wood, fibreboard, plastics material, expanded plastics material, etc.). Once assembled, such a packaging remains thereafter an inseparable unit; it is filled, stored, despatched and emptied as such;

***NOTE:** The "inners" of "composite packagings" are normally termed "inner receptacles". For example, the "inner" of a 6HA1 (composite packaging, plastics material) is such an "inner receptacle" since it is normally not designed to perform a containment function without its "outer packaging" and is not therefore an "inner packaging".*

"Consignee" means the consignee according to the contract for carriage. If the consignee designates a third party in accordance with the provisions applicable to the contract for carriage, this person shall be deemed to be the consignee within the meaning of ADR. If the transport operation takes place without a contract for carriage, the enterprise which takes charge of the dangerous goods on arrival shall be deemed to be the consignee;

"Consignment" means any package or packages, or load of dangerous goods, presented by a consignor for carriage;

"Consignor" means the enterprise which consigns dangerous goods either on its own behalf or for a third party. If the transport operation is carried out under a contract for carriage, consignor means the consignor according to the contract for carriage;

"Container" means an article of transport equipment (lift van or other similar structure):

- of a permanent character and accordingly strong enough to be suitable for repeated use;

- specially designed to facilitate the carriage of goods, by one or more means of transport, without breakage of load;

- fitted with devices permitting its ready stowage and handling, particularly when being transloaded from one means of transport to another;

- so designed as to be easy to fill and empty (see also *"Closed container", "Large container", "Open container", "Sheeted container"* and *"Small container"*).

A swap body is a container which, in accordance with European Standard EN 283 (1991 edition) has the following characteristics:

- from the point of view of mechanical strength, it is only built for carriage on a wagon or a vehicle on land or by roll-on roll-of ship;

- it cannot be stacked;

- it can be removed from vehicles by means of equipment on board the vehicle and on its own supports, and can be reloaded;

NOTE: *The term "container" does not cover conventional packagings, IBCs, tank-containers or vehicles.*

"Control temperature" means the maximum temperature at which the organic peroxide or the self-reactive substance can be safely carried;

"CSC" means the International Convention for Safe Containers (Geneva, 1972) as amended and published by the International Maritime Organization (IMO), London;

"Crate" means an outer packaging with incomplete surfaces;

"Critical temperature" means the temperature above which the substance cannot exist in the liquid state;

"Cryogenic receptacle" means a transportable thermally insulated pressure receptacle for refrigerated liquefied gases of a water capacity of not more than 1 000 litres;

"Cylinder" means a transportable pressure receptacle of a water capacity not exceeding 150 litres (see also *"Bundle of cylinders"*);

D

"Dangerous goods" means those substances and articles the carriage of which is prohibited by ADR, or authorized only under the conditions prescribed therein;

"Dangerous reaction" means:

(a) combustion or evolution of considerable heat;

(b) evolution of flammable, asphyxiant, oxidizing or toxic gases;

(c) the formation of corrosive substances;

(d) the formation of unstable substances; or

(e) dangerous rise in pressure (for tanks only);

"Demountable tank" means a tank, other than a fixed tank, a portable tank, a tank-container or an element of a battery-vehicle or a MEGC which has a capacity of more than 450 litres, is not designed for the carriage of goods without breakage of load, and normally can only be handled when it is empty;

"Discharge pressure" means the maximum pressure actually built up in the tank when it is being discharged under pressure (see also *"Calculation pressure", "Filling pressure", "Maximum working pressure (gauge pressure)"* and *"Test pressure"*);

"Drum" means a flat-ended or convex-ended cylindrical packaging made out of metal, fibreboard, plastics, plywood or other suitable materials. This definition also includes packagings of other shapes, e.g. round, taper-necked packagings or pail-shaped packagings. Wooden barrels and jerricans are not covered by this definition;

E

"EC Directive" means provisions decided by the competent institutions of the European Community and which are binding, as to the result to be achieved, upon each Member State to which it is addressed, but shall leave to the national authorities the choice of form and methods;

"ECE Regulation" means a regulation annexed to the Agreement concerning the adoption of uniform technical prescriptions for wheeled vehicles equipment and parts which can be fitted and or used on wheeled vehicles and the conditions for reciprocal recognition of approvals granted on the basis of these prescriptions (1958 Agreement, as amended);

"Emergency temperature" means the temperature at which emergency procedures shall be implemented in the event of loss of temperature control;

"EN" (standard) means a European standard published by the European Committee for Standardization (CEN) (CEN – 36 rue de Stassart. B-1050 Brussels);

"Enterprise" means any natural person, any legal person, whether profit-making or not, any association or group of persons without legal personality, whether profit-making or not, or any official body, whether it has legal personality itself or is dependent upon an authority that has such personality;

F

"Fibreboard IBC" means a fibreboard body with or without separate top and bottom caps, if necessary an inner liner (but no inner packagings), and appropriate service and structural equipment;

"Filler" means any enterprise which loads dangerous goods into a tank (tank-vehicle, demountable tank, portable tank or tank-container) and/or into a vehicle, large container or small container for carriage in bulk, or into a battery-vehicle or MEGC;

"Filling pressure" means the maximum pressure actually built up in the tank when it is being filled under pressure (see also *"Calculation pressure", "Discharge pressure", "Maximum working pressure (gauge pressure)"* and *"Test pressure"*);

"Filling ratio" means the ratio of the mass of gas to the mass of water at 15 °C that would fill completely a pressure receptacle fitted ready for use;

"Fixed tank" means a tank having a capacity of more than 1 000 litres which is permanently attached to a vehicle (which then becomes a tank-vehicle) or is an integral part of the frame of such vehicle;

"Flammable component" (for aerosols and gas cartridges) means a gas which is flammable in air at normal pressure or a substance or a preparation in liquid form which has a flash-point less than or equal to 100 °C;

"Flash-point" means the lowest temperature of a liquid at which its vapours form a flammable mixture with air;

"Flexible IBC" means a body constituted of film, woven fabric or any other flexible material or combinations thereof, and if necessary, an inner coating or liner, together with any appropriate service equipment and handling devices;

"Full load" means any load originating from one consignor for which the use of a vehicle or of a large container is exclusively reserved and all operations for the loading and unloading of which are carried out in conformity with the instructions of the consignor or of the consignee;

NOTE: *The corresponding term for Class 7 is "exclusive use", see 2.2.7.2.*

G

"Gas" means a substance which:

(a) at 50 °C has a vapour pressure greater than 300 kPa (3 bar); or

(b) is completely gaseous at 20 °C under standard pressure of 101.3 kPa;

"Gas cartridge" means any non-refillable receptacle containing, under pressure, a gas or a mixture of gases. It may be fitted with a valve;

"GHS" means the Globally Harmonized System of Classification and Labelling of Chemicals, published by the United Nations as document ST/SG/AC.10/30;

H

"Handling device" (for flexible IBCs) means any sling, loop, eye or frame attached to the body of the IBC or formed from the continuation of the IBC body material;

"Hermetically closed tank" means a tank intended for the carriage of liquid substances with a calculation pressure of at least 4 bar or intended for the carriage of solid substances (powdery or granular) regardless of its calculation pressure, the openings of which are hermetically closed and which:

- is not equipped with safety valves, bursting discs, other similar safety devices or vacuum valves; or

- is not equipped with safety valves, bursting discs or other similar safety devices, but is equipped with vacuum valves, as allowed by special provision TE15 of 6.8.4; or

- is equipped with safety valves preceded by a bursting disc according to 6.8.2.2.10, but is not equipped with vacuum valves; or

- is equipped with safety valves preceded by a bursting disc according to 6.8.2.2.10 and vacuum valves, as allowed by special provision TE15 of 6.8.4;

I

"IAEA" means the International Atomic Energy Agency (IAEA), (IAEA, P.O. Box 100 – A - 1400 Vienna);

"IBC", see *"Intermediate bulk container"*;

"ICAO Technical Instructions" means the Technical Instructions for the Safe Transport of Dangerous Goods by Air, which complement Annex 18 to the Chicago Convention on International Civil Aviation (Chicago 1944), published by the International Civil Aviation Organization (ICAO) in Montreal;

"IMDG Code" means the International Maritime Dangerous Goods Code, for the implementation of Chapter VII, Part A, of the International Convention for the Safety of Life at Sea, 1974 (SOLAS Convention), published by the International Maritime Organization (IMO), London;

"Inner packaging" means a packaging for which an outer packaging is required for carriage;

"Inner receptacle" means a receptacle which requires an outer packaging in order to perform its containment function;

"Inspection body" means an independent inspection and testing body approved by the competent authority;

"Intermediate bulk container" (IBC) means a rigid, or flexible portable packaging, other than those specified in Chapter 6.1, that:

(a) has a capacity of:

(i) not more than 3 m^3 for solids and liquids of packing groups II and III;

(ii) not more than 1.5 m^3 for solids of packing group I when packed in flexible, rigid plastics, composite, fibreboard and wooden IBCs;

(iii) not more than 3 m^3 for solids of packing group I when packed in metal IBCs;

(iv) not more than 3 m^3 for radioactive material of Class 7;

(b) is designed for mechanical handling;

(c) is resistant to the stresses produced in handling and transport as determined by the tests specified in Chapter 6.5 (see also *"Composite IBC with plastics inner receptacle", "Fibreboard IBC", "Flexible IBC", "Metal IBC", "Rigid plastics IBC"* and *"Wooden IBC"*);

***NOTE 1*:** *Portable tanks or tank-containers that meet the requirements of Chapter 6.7 or 6.8 respectively are not considered to be intermediate bulk containers (IBCs).*

***NOTE 2*:** *Intermediate bulk containers (IBCs) which meet the requirements of Chapter 6.5 are not considered to be containers for the purposes of ADR.*

"Remanufactured IBC" means a metal, rigid plastics or composite IBC that:

(a) is produced as a UN type from a non-UN type; or

(b) is converted from one UN design type to another UN design type.

Remanufactured IBCs are subject to the same requirements of ADR that apply to new IBCs of the same type (see also design type definition in 6.5.4.1.1);

"Repaired IBC" means a metal, rigid plastics or composite IBC that, as a result of impact or for any other cause (e.g. corrosion, embrittlement or other evidence of reduced strength as compared to the design type) is restored so as to conform to the design type and to be able to withstand the design type tests. For the purposes of ADR, the replacement of the rigid inner receptacle of a composite IBC with a receptacle conforming to the original manufacturer's specification is considered repair. However, routine maintenance of rigid IBCs is not considered repair. The bodies of rigid plastics IBCs and the inner receptacles of composite IBCs are not repairable. Flexible IBCs are not repairable unless approved by the competent authority;

"Routine maintenance of flexible IBCs" means the routine performance on plastics or textile flexible IBCs of operations, such as:

(a) Cleaning; or

(b) Replacement of non-integral components, such as non-integral liners and closure ties, with components conforming to the original manufacturer's specification;

provided that these operations do not adversely affect the containment function of the flexible IBC or alter the design type.

"Routine maintenance of rigid IBCs" means the routine performance on metal, rigid plastics or composite IBCs of operations such as:

(a) Cleaning;

(b) Removal and reinstallation or replacement of body closures (including associated gaskets), or of service equipment, conforming to the original manufacturer’s specifications, provided that the leaktightness of the IBC is verified; or

(c) Restoration of structural equipment not directly performing a dangerous goods containment or discharge pressure retention function so as to conform to the design type (e.g. the straightening of legs or lifting attachments) provided that the containment function of the IBC is not affected;

"Intermediate packaging" means a packaging placed between inner packagings or articles, and an outer packaging;

"ISO" (standard) means an international standard published by the International Organization for Standardization (ISO) (ISO - 1, rue de Varembé. CH-1204 Geneva 20);

J

"Jerrican" means a metal or plastics packaging of rectangular or polygonal cross-section with one or more orifices;

L

"Large container" means

(a) a container having an internal volume of more than 3 m^3;

(b) in the meaning of the CSC, a container of a size such that the area enclosed by the four outer bottom corners is either

(i) at least 14 m^2 (150 square feet); or

(ii) at least 7 m^2 (75 square feet) if fitted with top corner fittings;

NOTE: *For radioactive material see 2.2.7.1.2.*

"Large packaging" means a packaging consisting of an outer packaging which contains articles or inner packagings and which

(a) is designed for mechanical handling;

(b) exceeds 400 kg net mass or 450 litres capacity but has a volume of not more than 3 m^3;

"Leakproofness test" means a test to determine the leakproofness of a tank, a packaging or an IBC and of the equipment and closure devices;

NOTE: *For portable tanks, see Chapter 6.7.*

"Light-gauge metal packaging" means a packaging of circular, elliptical, rectangular or polygonal cross-section (also conical) and taper-necked and pail-shaped packaging made of metal, having a wall thickness of less than 0.5 mm (e.g. tinplate), flat or convex bottomed and with one or more orifices, which is not covered by the definitions for drums or jerricans;

"Liner" means a tube or bag inserted into a packaging, including large packagings or IBCs, but not forming an integral part of it, including the closures of its openings;

"Liquid" means a substance which at 50 °C has a vapour pressure of not more than 300 kPa (3 bar), which is not completely gaseous at 20 °C and 101.3 kPa, and which

(a) has a melting point or initial melting point of 20 °C or less at a pressure of 101.3 kPa; or

(b) is liquid according to the ASTM D 4359-90 test method; or

(c) is not pasty according to the criteria applicable to the test for determining fluidity (penetrometer test) described in 2.3.4;

NOTE: *"Carriage in the liquid state", for the purpose of tank requirements, means:*

- *Carriage of liquids according to the above definition; or*

- *Solids handed over for carriage in the molten state.*

"Loader" means any enterprise which loads dangerous goods into a vehicle or large container;

M

"Manual of Tests and Criteria" means the fourth revised edition of the United Nations Recommendations on the Transport of Dangerous Goods, Manual of Tests and Criteria, published by the United Nations Organization (ST/SG/AC.10/11/Rev.4);

"Mass of package" means gross mass of the package unless otherwise stated. The mass of containers and tanks used for the carriage of goods is not included in the gross mass;

"Maximum capacity" means the maximum inner volume of receptacles or packagings including intermediate bulk containers (IBCs) and large packagings expressed in cubic metres or litres;

"Maximum net mass" means the maximum net mass of contents in a single packaging or maximum combined mass of inner packagings and the contents thereof expressed in kilograms;

"Maximum permissible gross mass"

(a) (for all categories of IBCs other than flexible IBCs) means the mass of the IBC and any service or structural equipment together with the maximum net mass;

(b) (for tanks) means the tare of the tank and the heaviest load authorized for carriage;

NOTE: *For portable tanks, see Chapter 6.7.*

"Maximum permissible load" (for flexible IBCs) means the maximum net mass for which the IBC is intended and which it is authorized to carry;

"Maximum working pressure (gauge pressure)" means the highest of the following three pressures:

(a) the highest effective pressure allowed in the tank during filling (maximum filling pressure allowed);

(b) the highest effective pressure allowed in the tank during discharge (maximum discharge pressure allowed); and

(c) the effective gauge pressure to which the tank is subjected by its contents (including such extraneous gases as it may contain) at the maximum working temperature.

Unless the special requirements prescribed in Chapter 4.3 provide otherwise, the numerical value of this working pressure (gauge pressure) shall not be lower than the vapour pressure (absolute pressure) of the filling substance at 50 °C.

For tanks equipped with safety valves (with or without bursting disc) other than tanks for the carriage of compressed, liquefied or dissolved gases of Class 2, the maximum working pressure (gauge pressure) shall however be equal to the prescribed opening pressure of such safety valves.

(See also *"Calculation pressure"*, *"Discharge pressure", "Filling pressure"* and *"Test pressure"*);

NOTE 1: *For portable tanks, see Chapter 6.7.*

NOTE 2*:* *For closed cryogenic receptacles, see NOTE to 6.2.1.3.3.5.*

"MEGC", see *"Multiple-element gas container"*;

"Metal IBC" means a metal body together with appropriate service and structural equipment;

"Mild steel" means a steel having a minimum tensile strength between 360 N/mm^2 and 440 N/mm^2;

NOTE: *For portable tanks, see Chapter 6.7.*

"Multiple-element gas container" (MEGC) means a unit containing elements which are linked to each other by a manifold and mounted on a frame. The following elements are considered to be elements of a multiple-element gas container: cylinders, tubes, pressure drums and bundles of cylinders as well as tanks for the carriage of gases of Class 2 having a capacity of more than 450 litres;

NOTE: *For UN MEGCs, see Chapter 6.7.*

N

"Nominal capacity of the receptacle" means the nominal volume of the dangerous substance contained in the receptacle expressed in litres. For compressed gas cylinders the nominal capacity shall be the water capacity of the cylinder;

"N.O.S. entry (not otherwise specified entry)" means a collective entry to which substances, mixtures, solutions or articles may be assigned if they:

(a) are not mentioned by name in Table A of Chapter 3.2; and

(b) exhibit chemical, physical and/or dangerous properties corresponding to the Class, classification code, packing group and the name and description of the n.o.s. entry;

O

"Offshore bulk container" means a bulk container specially designed for repeated use for carriage to, from and between offshore facilities. An offshore bulk container is designed and constructed in accordance with the guidelines for the approval of offshore containers handled in open seas specified by the International Maritime Organization (IMO) in document MSC/Circ.860;

"Open container" means an open top container or a platform based container;

"Open vehicle" means a vehicle the platform of which has no superstructure or is merely provided with side boards and a tailboard;

"Outer packaging" means the outer protection of the composite or combination packaging together with any absorbent materials, cushioning and any other components necessary to contain and protect inner receptacles or inner packagings;

"Overpack" means an enclosure used by a single consignor to contain one or more packages, consolidated into a single unit easier to handle and stow during carriage;

Examples of overpacks:

(a) a loading tray such as a pallet, on which several packages are placed or stacked and secured by a plastic strip, shrink or stretch wrapping or other appropriate means; or

(b) an outer protective packaging such as a box or a crate;

P

"Package" means the complete product of the packing operation, consisting of the packaging or large packaging or IBC and its contents prepared for dispatch. The term includes receptacles for gases as defined in this section as well as articles which, because of their size, mass or configuration may be carried unpackaged or carried in cradles, crates or handling devices. The term does not apply to goods which are carried in bulk, nor to substances carried in tanks;

NOTE: *For radioactive material, see 2.2.7.2.*

"Packaging" means the receptacle and any other components or materials necessary for the receptacle to perform its containment function (see also *"Combination packaging", "Composite packaging (plastics material)", "Composite packaging (glass, porcelain or stoneware)", "Inner packaging", "Intermediate bulk container (IBC)", "Intermediate packaging", "Large packaging", "Light-gauge metal packaging", "Outer packaging", "Reconditioned packaging", "Remanufactured packaging", "Reused packaging", "Salvage packaging"* and *"Sift-proof packaging")*;

NOTE: *For radioactive material, see 2.2.7.2.*

"Packer" means any enterprise which puts dangerous goods into packagings, including large packagings and intermediate bulk containers (IBCs) and, where necessary, prepares packages for carriage;

"Packing group" means a group to which, for packing purposes, certain substances may be assigned in accordance with their degree of danger. The packing groups have the following meanings which are explained more fully in Part 2:

Packing group I: Substances presenting high danger;
Packing group II: Substances presenting medium danger; and
Packing group III: Substances presenting low danger;

NOTE: *Certain articles containing dangerous goods are assigned to a packing group.*

"Portable tank" means a multimodal tank having, when used for the carriage of Class 2 substances, a capacity of more than 450 litres in accordance with the definitions in Chapter 6.7 or the IMDG Code and indicated by a portable tank instruction (T-Code) in Column (10) of Table A of Chapter 3.2;

"Portable tank operator", see *"Tank-container/portable tank operator"*;

"Pressure drum" means a welded transportable pressure receptacle of a water capacity exceeding 150 litres and of not more than1 000 litres, (e.g. cylindrical receptacles equipped with rolling hoops, spheres on skids);"

"Pressure receptacle" means a collective term that includes cylinders, tubes, pressure drums, closed cryogenic receptacles and bundles of cylinders;

"Pressurized gas cartridge", see *"Aerosol* or *aerosol dispenser"*;

"Protected IBC" (for metal IBCs) means an IBC provided with additional protection against impact, the protection taking the form of, for example, a multi-layer (sandwich) or double-wall construction, or a frame with a metal lattice-work casing;

Q

"Quality assurance" means a systematic programme of controls and inspections applied by any organization or body which is aimed at providing confidence that the safety prescriptions in ADR are met in practice;

R

"Receptacle" (Class 1) includes boxes, bottles, cans, drums, jars and tubes, including any means of closure used in the inner or intermediate packaging;

"Receptacle" means a containment vessel for receiving and holding substances or articles, including any means of closing. This definition does not apply to shells (see also *"Cryogenic receptacle", "Inner receptacle", "Pressure receptacle", "Rigid inner receptacle"* and *"Gas cartridge"*);

"Reconditioned packaging" means in particular

(a) metal drums that are:

(i) cleaned to original materials of construction, with all former contents, internal and external corrosion, and external coatings and labels removed;

(ii) restored to original shape and contour, with chimes (if any) straightened and sealed and all non-integral gaskets replaced; and

(iii) inspected after cleaning but before painting, with rejection of packagings with visible pitting, significant reduction in the material thickness, metal fatigue, damaged threads or closures or other significant defects;

(b) plastics drums and jerricans that:

(i) are cleaned to original materials of construction, with all former contents, external coatings and labels removed;

(ii) have all non-integral gaskets replaced; and

(iii) are inspected after cleaning with rejection of packagings with visible damage such as tears, creases or cracks, or damaged threads or closures or other significant defects;

"Recycled plastics material" means material recovered from used industrial packagings that has been cleaned and prepared for processing into new packagings;

"Reel" (Class 1) means a device made of plastics, wood, fibreboard, metal or other suitable material comprising a central spindle with, or without, side walls at each end of the spindle. Articles and substances can be wound onto the spindle and may be retained by side walls;

"Reference steel" means a steel with a tensile strength of 370 N/mm^2 and an elongation at fracture of 27%;

"Remanufactured IBC", see *"Intermediate Bulk Container* (*IBC)"*;

"Remanufactured packaging" means in particular

(a) metal drums that:

(i) are produced as a UN type complying with the requirements of Chapter 6.1 from a non-UN type;

(ii) are converted from one UN type complying with the requirements of Chapter 6.1 to another UN type; or

(iii) undergo the replacement of integral structural components (such as non-removable heads);

(b) plastics drums that:

(i) are converted from one UN type to another UN type (e.g. 1H1 to 1H2); or

(ii) undergo the replacement of integral structural components.

Remanufactured drums are subject to the requirements of Chapter 6.1 which apply to new drums of the same type;

"Repaired IBC", see *"Intermediate Bulk Container* (*IBC)";*

"Reused packaging" means a packaging which has been examined and found free of defects affecting the ability to withstand the performance tests. The term includes those which are refilled with the same or similar compatible contents and are carried within distribution chains controlled by the consignor of the product;

"RID" means Regulations concerning the International Carriage of Dangerous Goods by Rail (Annex 1 to Appendix B (Uniform Rules Concerning the Contract for International Carriage of Goods by Rail) (CIM) of COTIF (Convention concerning international carriage by rail));

"Rigid inner receptacle" (for composite IBCs) means a receptacle which retains its general shape when empty without its closures in place and without benefit of the outer casing. Any inner receptacle that is not "rigid" is considered to be "flexible";

"Rigid plastics IBC" means a rigid plastics body, which may have structural equipment together with appropriate service equipment;

"Routine maintenance of flexible IBCs", see *"Intermediate Bulk Container* (*IBC)*";

"Routine maintenance of rigid IBCs", see *"Intermediate Bulk Container* (*IBC)*";

S

"Safety valve" means a spring-loaded device which is activated automatically by pressure the purpose of which is to protect the tank against unacceptable excess internal pressure;

"SADT" see *"Self-accelerating decomposition temperature"*;

"Salvage packaging" means a special packaging into which damaged, defective or leaking dangerous goods packages, or dangerous goods that have spilled or leaked are placed for purposes of carriage for recovery or disposal;

"Self-accelerating decomposition temperature" (SADT), means the lowest temperature at which self-accelerating decomposition may occur with substance in the packaging as used

during carriage. Provisions for determining the SADT and the effects of heating under confinement are contained in Part II of the Manual of Tests and Criteria;

"Service equipment"

(a) of the tank means filling and emptying, venting, safety, heating and heat insulating devices and measuring instruments;

(b) of the elements of a battery-vehicle or of a MEGC means filling and emptying devices, including the manifold, safety devices and measuring instruments;

(c) of an IBC means the filling and discharge devices and any pressure-relief or venting, safety, heating and heat insulating devices and measuring instruments;

NOTE: *For portable tanks, see Chapter 6.7.*

"Settled pressure" means the pressure of the contents of a pressure receptacle in thermal and diffusive equilibrium;

"Sheeted container" means an open container equipped with a sheet to protect the goods loaded;

"Sheeted vehicle" means an open vehicle provided with a sheet to protect the load;

"Shell" means the sheathing containing the substance (including the openings and their closures);

NOTE 1: *This definition does not apply to receptacles.*

NOTE 2: *For portable tanks, see Chapter 6.7.*

"Sift-proof packaging" means a packaging impermeable to dry contents, including fine solid material produced during carriage;

"Small container" means a container having an internal volume of not less than 1 m^3 and not more than 3 m^3;

NOTE: *For radioactive material, see 2.2.7.2.*

"Small receptacle containing gas", see *"Gas cartridge"*;

"Solid" means:

(a) a substance with a melting point or initial melting point of more than 20 °C at a pressure of 101.3 kPa; or

(b) a substance which is not liquid according to the ASTM D 4359-90 test method or which is pasty according to the criteria applicable to the test for determining fluidity (penetrometer test) described in 2.3.4;

"Structural equipment"

(a) for tanks of a tank-vehicle or demountable tank, means the external or internal reinforcing, fastening, protective or stabilizing members of the shell;

(b) for tanks of a tank-container, means the external or internal reinforcing, fastening, protective or stabilizing members of the shell;

(c) for elements of a battery-vehicle or an MEGC means the external or internal reinforcing, fastening, protective or stabilizing members of the shell or receptacle;

(d) for IBCs other than flexible IBCs means the reinforcing, fastening, handling, protective or stabilizing members of the body (including the base pallet for composite IBCs with plastics inner receptacle);

NOTE: *For portable tanks, see Chapter 6.7.*

"Swap-body", see *"Container"*;

T

"Tank" means a shell, including its service and structural equipment. When used alone, the term tank means a tank-container, portable tank, demountable tank or fixed tank as defined in this Part, including tanks forming elements of battery-vehicles or MEGCs (see also *"Demountable tank", "Fixed tank", "Portable tank"* and *"Multiple-element gas container"*);

NOTE: *For portable tanks, see 6.7.4.1.*

"Tank-container" means an article of transport equipment meeting the definition of a container, and comprising a shell and items of equipment, including the equipment to facilitate movement of the tank-container without significant change of attitude, used for the carriage of gases, liquid, powdery or granular substances and, when used for the carriage of Class 2 substances, having a capacity of more than 0.45 m^3 (450 litres);

NOTE: *IBCs which meet the requirements of Chapter 6.5 are not considered to be tank-containers.*

"Tank-container/portable tank operator" means any enterprise in whose name the tank-container/portable tank is registered;

"Tank swap body" is considered to be a tank-container;

"Tank-vehicle" means a vehicle built to carry liquids, gases or powdery or granular substances and comprising one or more fixed tanks. In addition to the vehicle proper, or the units of running gear used in its stead, a tank-vehicle comprises one or more shells, their items of equipment and the fittings for attaching them to the vehicle or to the running-gear units;

"Technical name" means a recognized chemical name, if relevant a biological name, or other name currently used in scientific and technical handbooks, journals and texts (see 3.1.2.8.1.1);

"Test pressure" means the required pressure applied during a pressure test for initial or periodic inspection (see also *"Calculation pressure"*, *"Discharge pressure", "Filling pressure"* and *"Maximum working pressure (gauge pressure)"*);

NOTE: *For portable tanks, see Chapter 6.7.*

"Transport unit" means a motor vehicle without an attached trailer, or a combination consisting of a motor vehicle and an attached trailer;

"Tray" (Class 1) means a sheet of metal, plastics, fibreboard or other suitable material which is placed in the inner, intermediate or outer packaging and achieves a close-fit in such packaging. The surface of the tray may be shaped so that packagings or articles can be inserted, held secure and separated from each other;

"Tube" (Class 2) means a seamless transportable pressure receptacle of a water capacity exceeding 150 litres and of not more than 3 000 litres;

U

"Undertaking", see *"Enterprise"*;

"UN Model Regulations" means the Model Regulations annexed to the thirteenth revised edition of the Recommendations on the Transport of Dangerous Goods published by the United Nations (ST/SG/AC.10/1/Rev.13);

"UN number" means the four-figure identification number of the substance or article taken from the UN Model Regulations;

V

"Vacuum-operated waste tank" means a fixed tank, demountable tank, tank-container or tank swap body primarily used for the carriage of dangerous wastes, with special constructional features and/or equipment to facilitate the loading and unloading of wastes as specified in Chapter 6.10. A tank which fully complies with the requirements of Chapter 6.7 or 6.8 is not considered to be a vacuum-operated waste tank;

"Vacuum valve" means a spring-loaded device which is activated automatically by pressure the purpose of which is to protect the tank against unacceptable negative internal pressure;

"Vehicle" see *"Battery-vehicle", "Closed vehicle", "Open vehicle", "Sheeted vehicle"* and *"Tank-vehicle"*;

W

"Wastes" means substances, solutions, mixtures or articles for which no direct use is envisaged but which are transported for reprocessing, dumping, elimination by incineration or other methods of disposal;

"Wooden barrel" means a packaging made of natural wood, of round cross-section, having convex walls, consisting of staves and heads and fitted with hoops;

"Wooden IBC" means a rigid or collapsible wooden body, together with an inner liner (but no inner packaging) and appropriate service and structural equipment;

"Working pressure" means the settled pressure of a compressed gas at a reference temperature of 15 °C in a full pressure receptacle;

NOTE: *For tanks, see "Maximum working pressure".*

"Woven plastics" (for flexible IBCs) means a material made from stretch tapes or monofilaments of suitable plastics material.

1.2.2 Units of measurement

1.2.2.1 The following units of measurement [a] are applicable in ADR:

Measurement of	SI Unit [b]	Acceptable alternative unit	Relationship between units
Length	m (metre)	-	-
Area	m^2 (square metre)	-	-
Volume	m^3 (cubic metre)	l [c] (litre)	1 *l* = 10^{-3} m^3
Time	s (second)	min. (minute)	1 min. = 60 s
		h (hour)	1 h = 3 600 s
		d (day)	1 d = 86 400 s
Mass	kg (kilogram)	g (gramme)	1g = 10^{-3} kg
		t (ton)	1 t = 10^3 kg
Mass density	kg/m^3	kg/l	1 kg/l = 10^3 kg/m^3
Temperature	K (kelvin)	°C (degree Celsius)	0 °C = 273.15 K
Temperature difference	K (kelvin)	°C (degree Celsius)	1 °C = 1 K
Force	N (newton)	-	1 N = 1 $kg.m/s^2$
Pressure	Pa (pascal)		1 Pa = 1 N/m^2
		bar (bar)	1 bar = 10^5 Pa
Stress	N/m^2	N/mm^2	1 N/mm^2 = 1 MPa
Work		kWh (kilowatt hours)	1 kWh = 3.6 MJ
Energy	J (joule)		1 J = 1 N.m = 1 W.s
Quantity of heat		eV (electronvolt)	1 eV = 0.1602 H 10^{-18}J
Power	W (watt)	-	1 W = 1 J/s = 1 N.m/s
Kinematic viscosity	m^2/s	mm^2/s	1 mm^2/s = 10^{-6} m^2/s
Dynamic viscosity	Pa.s	mPa.s	1 mPa.s = 10^{-3} Pa.s
Activity	Bq (becquerel)		
Dose equivalent	Sv (sievert)		

[a] *The following round figures are applicable for the conversion of the units hitherto used into SI Units.*

Force

1 kg	=	*9.807 N*
1 N	=	*0.102 kg*

Stress

1 kg/mm²	=	*9.807 N/mm²*
1 N/mm²	=	*0.102 kg/mm²*

Pressure

1 Pa	=	*1 N/m²*	=	*10^{-5} bar*	=	*1.02×10^{-5} kg/cm²*	=	*0.75×10^{-2} torr*
1 bar	=	*10^5 Pa*	=	*1.02 kg/cm²*	=	*750 torr*		
1 kg/cm²	=	*9.807×10^4 Pa*	=	*0.9807 bar*	=	*736 torr*		
1 torr	=	*1.33×10^2 Pa*	=	*1.33×10^{-3} bar*	=	*1.36×10^{-3} kg/cm²*		

Energy, Work, Quantity of heat

1 J	=	*1 N.m*	=	*0.278×10^{-6} kWh*	=	*0.102 kgm*	=	*0.239×10^{-3} kcal*
1 kWh	=	*3.6×10^6 J*	=	*367×10^3 kgm*	=	*860 kcal*		
1 kgm	=	*9.807 J*	=	*2.72×10^{-6} kWh*	=	*2.34×10^{-3} kcal*		
1 kcal	=	*4.19×10^3 J*	=	*1.16×10^{-3} kWh*	=	*427 kgm*		

Power

1 W	=	*0.102 kgm/s*	=	*0.86 kcal/h*
1 kgm/s	=	*9.807 W*	=	*8.43 kcal/h*
1 kcal/h	=	*1.16 W*	=	*0.119 kgm/s*

Kinematic viscosity

1 m²/s	=	*10^4 St (Stokes)*
1 St	=	*10^{-4} m²/s*

Dynamic viscosity

1 Pa.s	=	*1 N.s/m²*	=	*10 P (poise)*	=	*0.102 kg.s/m²*
1 P	=	*0.1 Pa.s*	=	*0.1 N.s/m²*	=	*1.02 H 10⁻² kg.s/m²*
1 kg.s/m²	=	*9.807 Pa.s*	=	*9.807 N.s/m²*	=	*98.07 P*

[b] *The International System of Units (SI) is the result of decisions taken at the General Conference on Weights and Measures (Address: Pavillon de Breteuil, Parc de St-Cloud, F-92 310 Sèvres).*

[c] *The abbreviation "L" for litre may also be used in place of the abbreviation "l" when a typewriter cannot distinguish between figure "1" and letter "l".*

The decimal multiples and sub-multiples of a unit may be formed by prefixes or symbols, having the following meanings, placed before the name or symbol of the unit:

Factor		Prefix	Symbol
1 000 000 000 000 000 000	$= 10^{18}$	quintillion	E
1 000 000 000 000 000	$= 10^{15}$	quadrillion	P
1 000 000 000 000	$= 10^{12}$	trillion	T
1 000 000 000	$= 10^{9}$	billion	G
1 000 000	$= 10^{6}$	million	M
1 000	$= 10^{3}$	thousand	k
100	$= 10^{2}$	hundred	h
10	$= 10^{1}$	ten	da
0.1	$= 10^{-1}$	tenth	d
0.01	$= 10^{-2}$	hundredth	c
0.001	$= 10^{-3}$	thousandth	m
0.000 001	$= 10^{-6}$	millionth	µ
0.000 000 001	$= 10^{-9}$	billionth	n
0.000 000 000 001	$= 10^{-12}$	trillionth	p
0.000 000 000 000 001	$= 10^{-15}$	quadrillionth	f
0.000 000 000 000 000 001	$= 10^{-18}$	quintillionth	a

NOTE: *10^9 billion is United Nations usage in English. By analogy, so is 10^{-9} = 1 billionth.*

1.2.2.2 Unless expressly stated otherwise, the sign "%" in ADR represents:

(a) In the case of mixtures of solids or of liquids, and also in the case of solutions and of solids wetted by a liquid, a percentage mass based on the total mass of the mixture, the solution or the wetted solid;

(b) In the case of mixtures of compressed gases, when filled by pressure, the proportion of the volume indicated as a percentage of the total volume of the gaseous mixture, or, when filled by mass, the proportion of the mass indicated as a percentage of the total mass of the mixture;

(c) In the case of mixtures of liquefied gases and dissolved gases, the proportion of the mass indicated as a percentage of the total mass of the mixture.

1.2.2.3 Pressures of all kinds relating to receptacles (such as test pressure, internal pressure, safety valve opening pressure) are always indicated in gauge pressure (pressure in excess of atmospheric pressure); however, the vapour pressure of substances is always expressed in absolute pressure.

1.2.2.4 Where ADR specifies a degree of filling for receptacles, this is always related to a reference temperature of the substances of 15 °C, unless some other temperature is indicated.

CHAPTER 1.3

TRAINING OF PERSONS INVOLVED IN THE CARRIAGE OF DANGEROUS GOODS

1.3.1 Scope and applicability

Persons employed by the participants referred to in Chapter 1.4, whose duties concern the carriage of dangerous goods, shall receive training in the requirements governing the carriage of such goods appropriate to their responsibilities and duties. Training requirements specific to security of dangerous goods in Chapter 1.10 shall also be addressed.

NOTE 1: *With regard to the training for the safety adviser, see 1.8.3.*

NOTE 2: *With regard to the training of the vehicle crew, see Chapter 8.2.*

1.3.2 Nature of the training

The training shall take the following form, appropriate to the responsibility and duties of the individual concerned.

1.3.2.1 *General awareness training*

Personnel shall be familiar with the general requirements of the provisions for the carriage of dangerous goods.

1.3.2.2 *Function-specific training*

Personnel shall receive detailed training, commensurate directly with their duties and responsibilities in the requirements of the regulations concerning the carriage of dangerous goods.

Where the carriage of dangerous goods involves a multimodal transport operation, the personnel shall be made aware of the requirements concerning other transport modes.

1.3.2.3 *Safety training*

Commensurate with the degree of risk of injury or exposure arising from an incident involving the carriage of dangerous goods, including loading and unloading, personnel shall receive training covering the hazards and dangers presented by dangerous goods.

The training provided shall aim to make personnel aware of the safe handling and emergency response procedures.

1.3.2.4 *Training for Class 7*

For the purpose of Class 7, personnel shall receive appropriate training concerning the radiation hazards involved and the precautions to be observed in order to ensure restriction of their exposure and that of other persons who might be affected by their actions.

1.3.3 Documentation

Details of all the training undertaken shall be kept by both the employer and the employee and shall be verified upon commencing a new employment. The training shall be periodically supplemented with refresher training to take account of changes in regulations.

CHAPTER 1.4

SAFETY OBLIGATIONS OF THE PARTICIPANTS

1.4.1 General safety measures

1.4.1.1 The participants in the carriage of dangerous goods shall take appropriate measures according to the nature and the extent of foreseeable dangers, so as to avoid damage or injury and, if necessary, to minimize their effects. They shall, in all events, comply with the requirements of ADR in their respective fields.

1.4.1.2 When there is an immediate risk that public safety may be jeopardized, the participants shall immediately notify the emergency services and shall make available to them the information they require to take action.

1.4.1.3 ADR may specify certain of the obligations falling to the various participants.

If a Contracting Party considers that no lessening of safety is involved, it may in its domestic legislation transfer the obligations falling to a specific participant to one or several other participants, provided that the obligations of 1.4.2 and 1.4.3 are met. These derogations shall be communicated by the Contracting Party to the Secretariat of the United Nations Economic Commission for Europe which will bring them to the attention of the Contracting Parties.

The requirements of 1.2.1, 1.4.2 and 1.4.3 concerning the definitions of participants and their respective obligations shall not affect the provisions of domestic law concerning the legal consequences (criminal nature, liability, etc.) stemming from the fact that the participant in question is e.g. a legal entity, a self-employed worker, an employer or an employee.

1.4.2 Obligations of the main participants

NOTE: *For radioactive materials see also 1.7.6.*

1.4.2.1 *Consignor*

1.4.2.1.1 The consignor of dangerous goods is required to hand over for carriage only consignments which conform to the requirements of ADR. In the context of 1.4.1, he shall in particular:

(a) ascertain that the dangerous goods are classified and authorized for carriage in accordance with ADR;

(b) furnish the carrier with information and data and, if necessary, the required transport documents and accompanying documents (authorizations, approvals, notifications, certificates, etc.), taking into account in particular the requirements of Chapter 5.4 and of the tables in Part 3;

(c) use only packagings, large packagings, intermediate bulk containers (IBCs) and tanks (tank-vehicles, demountable tanks, battery-vehicles, MEGCs, portable tanks and tank-containers) approved for and suited to the carriage of the substances concerned and bearing the markings prescribed by ADR;

(d) comply with the requirements on the means of dispatch and on forwarding restrictions;

(e) ensure that even empty uncleaned and not degassed tanks (tank-vehicles, demountable tanks, battery-vehicles, MEGCs, portable tanks and tank-containers) or empty

uncleaned vehicles and large and small bulk containers are appropriately marked and labelled and that empty uncleaned tanks are closed and present the same degree of leakproofness as if they were full.

1.4.2.1.2 If the consignor uses the services of other participants (packer, loader, filler, etc.), he shall take appropriate measures to ensure that the consignment meets the requirements of ADR. He may, however, in the case of 1.4.2.1.1 (a), (b), (c) and (e), rely on the information and data made available to him by other participants.

1.4.2.1.3 When the consignor acts on behalf of a third party, the latter shall inform the consignor in writing that dangerous goods are involved and make available to him all the information and documents he needs to perform his obligations.

1.4.2.2 ***Carrier***

1.4.2.2.1 In the context of 1.4.1, where appropriate, the carrier shall in particular:

(a) ascertain that the dangerous goods to be carried authorized for carriage in accordance with ADR;

(b) ascertain that the prescribed documentation is on board the transport unit;

(c) ascertain visually that the vehicles and loads have no obvious defects, leakages or cracks, missing equipment, etc.;

(d) ascertain that the date of the next test for tank-vehicles, battery-vehicles, demountable tanks, portable tanks, tank-containers and MEGCs has not expired;

(e) verify that the vehicles are not overloaded;

(f) ascertain that the danger labels and markings prescribed for the vehicles have been affixed;

(g) ascertain that the equipment prescribed in the written instructions for the driver is on board the vehicle.

Where appropriate, this shall be done on the basis of the transport documents and accompanying documents, by a visual inspection of the vehicle or the containers and, where appropriate, the load.

1.4.2.2.2 The carrier may, however, in the case of 1.4.2.2.1 (a), (b), (e) and (f), rely on information and data made available to him by other participants.

1.4.2.2.3 If the carrier observes an infringement of the requirements of ADR, in accordance with 1.4.2.2.1, he shall not forward the consignment until the matter has been rectified.

1.4.2.2.4 If, during the journey, an infringement which could jeopardize the safety of the operation is observed, the consignment shall be halted as soon as possible bearing in mind the requirements of traffic safety, of the safe immobilisation of the consignment, and of public safety. The transport operation may only be continued once the consignment complies with applicable regulations. The competent authority(ies) concerned by the rest of the journey may grant an authorization to pursue the transport operation.

In case the required compliance cannot be achieved and no authorization is granted for the rest of the journey, the competent authority(ies) shall provide the carrier with the necessary administrative assistance. The same shall apply in case the carrier informs this/these

competent authority(ies) that the dangerous nature of the goods carried was not communicated to him by the consignor and that he wishes, by virtue of the law applicable in particular to the contract of carriage, to unload, destroy or render the goods harmless.

1.4.2.3 ***Consignee***

1.4.2.3.1 The consignee has the obligation not to defer acceptance of the goods without compelling reasons and to verify, after unloading, that the requirements of ADR concerning him have been complied with.

In the context of 1.4.1, he shall in particular:

(a) carry out in the cases provided for by ADR the prescribed cleaning and decontamination of the vehicles and containers;

(b) ensure that the containers once completely unloaded, cleaned and decontaminated, no longer bear danger markings conforming to Chapter 5.3.

1.4.2.3.2 If the consignee makes use of the services of other participants (unloader, cleaner, decontamination facility, etc.) he shall take appropriate measures to ensure that the requirements of ADR have been complied with.

1.4.2.3.3 If these verifications bring to light an infringement of the requirements of ADR, the consignee shall return the container to the carrier only after the infringement has been remedied.

1.4.3 Obligations of the other participants

A non-exhaustive list of the other participants and their respective obligations is given below. The obligations of the other participants flow from section 1.4.1 above insofar as they know or should have known that their duties are performed as part of a transport operation subject to ADR.

1.4.3.1 ***Loader***

1.4.3.1.1 In the context of 1.4.1, the loader has the following obligations in particular:

(a) he shall hand the dangerous goods over to the carrier only if they are authorized for carriage in accordance with ADR;

(b) he shall, when handing over for carriage packed dangerous goods or uncleaned empty packagings, check whether the packaging is damaged. He shall not hand over a package the packaging of which is damaged, especially if it is not leakproof, and there are leakages or the possibility of leakages of the dangerous substance, until the damage has been repaired; this obligation also applies to empty uncleaned packagings;

(c) he shall, when loading dangerous goods in a vehicle, or a large or small container, comply with the special requirements concerning loading and handling;

(d) he shall, after loading dangerous goods into a container comply with the requirements concerning danger markings conforming to Chapter 5.3;

(e) he shall, when loading packages, comply with the prohibitions on mixed loading taking into account dangerous goods already in the vehicle or large container and requirements concerning the separation of foodstuffs, other articles of consumption or animal feedstuffs.

1.4.3.1.2 The loader may, however, in the case of 1.4.3.1.1 (a), (d) and (e), rely on information and data made available to him by other participants.

1.4.3.2 ***Packer***

In the context of 1.4.1, the packer shall comply with in particular:

(a) the requirements concerning packing conditions, or mixed packing conditions; and

(b) when he prepares packages for carriage, the requirements concerning marking and labelling of the packages.

1.4.3.3 ***Filler***

In the context of 1.4.1, the filler has the following obligations in particular:

(a) he shall ascertain prior to the filling of tanks that both they and their equipment are technically in a satisfactory condition;

(b) he shall ascertain that the date of the next test for tank-vehicles, battery-vehicles, demountable tanks, portable tanks, tank-containers and MEGCs has not expired;

(c) he shall only fill tanks with the dangerous goods authorized for carriage in those tanks;

(d) he shall, in filling the tank, comply with the requirements concerning dangerous goods in adjoining compartments;

(e) he shall, during the filling of the tank, observe the maximum permissible degree of filling or the maximum permissible mass of contents per litre of capacity for the substance being filled;

(f) he shall, after filling the tank, check the leakproofness of the closing devices;

(g) he shall ensure that no dangerous residue of the filling substance adheres to the outside of the tanks filled by him;

(h) he shall, in preparing the dangerous goods for carriage, ensure that the orange plates and placards or labels prescribed are affixed on the tanks, on the vehicles and on the large and small containers for carriage in bulk in accordance with the requirements.

1.4.3.4 ***Tank-container/portable tank operator***

In the context of 1.4.1, the tank-container/portable tank operator shall in particular:

(a) ensure compliance with the requirements for construction, equipment, tests and marking;

(b) ensure that the maintenance of shells and their equipment is carried out in such a way as to ensure that, under normal operating conditions, the tank-container/portable tank satisfies the requirements of ADR until the next inspection;

(c) have an exceptional check made when the safety of the shell or its equipment is liable to be impaired by a repair, an alteration or an accident.

1.4.3.5 ***(Reserved)***

CHAPTER 1.5

DEROGATIONS

1.5.1 Temporary derogations

1.5.1.1 For the purpose of adapting the requirements of ADR to technological and industrial developments, the competent authorities of the Contracting Parties may agree directly among themselves to authorize certain transport operations in their territories by temporary derogation from the requirements of ADR, provided that safety is not compromised thereby. The authority which has taken the initiative with respect to the temporary derogation shall notify such derogations to the Secretariat of the United Nations Economic Commission for Europe which shall bring them to the attention of the Contracting Parties [1].

NOTE: *"Special arrangement" in accordance with 1.7.4 is not considered to be a temporary derogation in accordance with this section.*

1.5.1.2 The period of validity of the temporary derogation shall not be more than five years from the date of its entry into force. The temporary derogation shall automatically cease as from the date of the entry into force of a relevant amendment to ADR.

1.5.1.3 Transport operations on the basis of temporary derogations shall constitute transport operations in the sense of ADR.

1.5.2 *(Reserved)*

[1] ***Note by the Secretariat:*** *The special agreements concluded under this Chapter may be consulted on the web site of the Secretariat of the United Nations Economic Commission for Europe (http://www.unece.org/trans/danger/danger.htm).*

CHAPTER 1.6

TRANSITIONAL MEASURES

1.6.1 General

1.6.1.1 Unless otherwise provided, the substances and articles of ADR may be carried until 30 June 2005 in accordance with the requirements of ADR applicable up to 31 December 2004.

1.6.1.2 The danger labels which until 31 December 2004 conformed to the models prescribed up to that date may be used until stocks are exhausted.

1.6.1.3 Substances and articles of Class 1, belonging to the armed forces of a Contracting Party, that were packaged prior to 1 January 1990 in accordance with the requirements of ADR in effect at that time may be carried after 31 December 1989 provided the packagings maintain their integrity and are declared in the transport document as military goods packaged prior to 1 January 1990. The other requirements applicable as from 1 January 1990 for this class shall be complied with.

1.6.1.4 Substances and articles of Class 1 that were packaged between 1 January 1990 and 31 December 1996 in accordance with the requirements of ADR in effect at that time may be carried after 31 December 1996, provided the packagings maintain their integrity and are declared in the transport document as goods of Class 1 packaged between 1 January 1990 and 31 December 1996.

1.6.1.5 *(Reserved)*

1.6.1.6 Intermediate bulk containers (IBCs) manufactured before 1 January 2003 in accordance with the requirements of marginal 3612 (1) applicable up to 30 June 2001 and which do not conform to the requirements of 6.5.2.1.1 regarding the height of letters, numerals and symbols applicable as from 1 July 2001 may continue to be used.

1.6.1.7 Type approvals for drums, jerricans and composite packagings made of high or medium molecular mass polyethylene issued before 1 July 2005 in accordance with the requirements of 6.1.5.2.6 in force up to 31 December 2004, but which are not in accordance with the requirements of 4.1.1.19, continue to be valid until 31 December 2009. Any such packagings manufactured and marked on the basis of these type approvals may be used until the end of their period of use determined in 4.1.1.15.

1.6.1.8 Existing orange-coloured plates which meet the requirements of sub-section 5.3.2.2 applicable up to 31 December 2004 may continue to be used.

1.6.1.9 The requirements of 8.2.1 are applicable to drivers of vehicles with a permissible maximum mass not exceeding 3.5 tonnes as from 1 January 2007. This transitional provision does not apply to drivers referred to in 8.2.1.3 and 8.2.1.4.

1.6.1.10 Lithium cells and batteries manufactured before 1 July 2003 which had been tested in accordance with the requirements applicable until 31 December 2002 but which had not been tested in accordance with the requirements applicable as from 1 January 2003, and appliances containing such lithium cells or batteries, may continue to be carried up to 30 June 2013 if all the other applicable requirements are fulfilled.

1.6.2 Receptacles for Class 2

1.6.2.1 Receptacles built before 1 January 1997 and which do not conform to the requirements of ADR applicable as from 1 January 1997, but the carriage of which was permitted under the requirements of ADR applicable up to 31 December 1996, may continue to be transported after that date if the periodic test requirements in packing instructions P200 and P203 are complied with.

1.6.2.2 Cylinders in accordance with the definition in 1.2.1 which were submitted to an initial inspection or periodic inspection before 1 January 1997 may be transported empty and uncleaned without a label until the date of the next refilling or the next periodic inspection.

1.6.2.3 Receptacles intended for the carriage of Class 2 substances constructed before 1 January 2003, may continue to bear, after 1 January 2003, the markings conforming to the requirements applicable until 31 December 2002.

1.6.3 Fixed tanks (tank-vehicles), demountable tanks and battery-vehicles

1.6.3.1 Fixed tanks (tank-vehicles), demountable tanks and battery-vehicles built before the entry into force of the requirements applicable as from 1 October 1978 may be kept in service if the equipment of the shell meets the requirements of Chapter 6.8. The thickness of the shell wall, except in the case of shells intended for the carriage of refrigerated liquefied gases of Class 2, shall be appropriate to a calculation pressure of not less than 0.4 MPa (4bar) (gauge pressure) in the case of mild steel or of not less than 200 kPa (2 bar) (gauge pressure) in the case of aluminium and aluminium alloys. For other than circular cross-sections of tanks, the diameter to be used as a basis for calculation shall be that of a circle whose area is equal to that of the actual cross-section of the tank.

1.6.3.2 The periodic tests for fixed tanks (tank-vehicles), demountable tanks and battery-vehicles kept in service under these transitional requirements shall be conducted in accordance with the requirements of 6.8.2.4 and 6.8.3.4 and with the pertinent special requirements for the various classes. Unless the earlier requirements prescribed a higher test pressure, a test pressure of 200 kPa (2 bar) (gauge pressure) shall suffice for aluminium shells and aluminium alloy shells.

1.6.3.3 Fixed tanks (tank-vehicles), demountable tanks and battery-vehicles which meet the transitional requirements in 1.6.3.1 and 1.6.3.2 may be used until 30 September 1993 for the carriage of the dangerous goods for which they have been approved. This transitional period shall not apply to fixed tanks (tank-vehicles), demountable tanks and battery-vehicles intended for the carriage of substances of Class 2, or to fixed tanks (tank-vehicles), demountable tanks and battery-vehicles whose wall thickness and items of equipment meet the requirements of Chapter 6.8.

1.6.3.4 (a) Fixed tanks (tank-vehicles), demountable tanks and battery-vehicles constructed before 1 May 1985 in accordance with the requirements of ADR in force between 1 October 1978 and 30 April 1985 but not conforming to the requirements applicable as from 1 May 1985 may continue to be used after that date;

(b) Fixed tanks (tank-vehicles), demountable tanks and battery-vehicles, constructed between 1 May 1985 and the entry into force of the requirements applicable as from 1 January 1988 which do not conform to those requirements but were constructed according to the requirements of ADR in force until that date, may continue to be used after that date.

1.6.3.5 Fixed tanks (tank-vehicles), demountable tanks and battery-vehicles, constructed before 1 January 1993 in accordance with the requirements in force up to 31 December 1992 but which do not conform to the requirements applicable as from 1 January 1993 may still be used.

1.6.3.6 (a) Fixed tanks (tank-vehicles), demountable tanks and battery-vehicles constructed between 1 January 1978 and 31 December 1984, if used after 31 December 2004, shall conform to the requirements of marginal 211 127(5), applicable as from 1 January 1990, concerning shell thickness and protection against damage;

(b) Fixed tanks (tank-vehicles), demountable tanks and battery-vehicles constructed between 1 January 1985 and 31 December 1989, if used after 31 December 2010, shall conform to the requirements of marginal 211 127(5), applicable as from 1 January 1990, concerning shell thickness and protection against damage.

1.6.3.7 Fixed tanks (tank-vehicles), demountable tanks and battery-vehicles constructed before 1 January 1999 in accordance with the requirements in force up to 31 December 1998 but which do not, however, conform to the requirements applicable as from 1 January 1999 may still be used.

1.6.3.8 Fixed tanks (tank-vehicles) demountable tanks and battery-vehicles intended for the carriage of substances of Class 2, which were built prior to 1 January 1997, may carry markings conforming to the requirements applicable up to 31 December 1996, until the next periodic test.

When, because of amendments to ADR, some proper shipping names of gases have been modified, it is not necessary to modify the names on the plate or on the shell itself (see 6.8.3.5.2 or 6.8.3.5.3), provided that the names of the gases on the fixed tanks (tank-vehicles), demountable tanks and battery-vehicles or on the plates [see 6.8.3.5.6 (b) or (c)] are adapted at the first periodic test thereafter.

1.6.3.9 and 1.6.3.10 *(Reserved)*

1.6.3.11 Fixed tanks (tank-vehicles) and demountable tanks constructed before 1 January 1997 in accordance with the requirements in force up to 31 December 1996 but which do not, however, conform to the requirements of marginals 211 332 and 211 333 applicable as from 1 January 1997, may still be used.

1.6.3.12 *(Reserved)*

1.6.3.13 Fixed tanks (tank-vehicles) and demountable tanks intended for the carriage of substances of UN No. 3257 constructed before 1 January 1997 which do not however conform to the requirements applicable as from 1 January 1997, may continue to be used until 31 December 2006.

1.6.3.14 to 1.6.3.17 *(Reserved)*

1.6.3.18 Fixed tanks (tank-vehicles), demountable tanks and battery-vehicles constructed before 1 January 2003 in accordance with the requirements in force up to 30 June 2001, but which do not, however, conform to the requirements applicable as from 1 July 2001, may still be used. Assignment to the tank code in the design type approvals and the relevant markings shall be carried out prior to 1 January 2009.

1.6.3.19 Fixed tanks (tank-vehicles) and demountable tanks constructed before 1 January 2003 in accordance with the requirements of 6.8.2.1.21 in force up to 31 December 2002 but which do not, however, conform to the requirements applicable as from 1 January 2003 may still be used.

1.6.3.20 Fixed tanks (tank-vehicles) and demountable tanks constructed before 1 July 2003 in accordance with the requirements in force up to 31 December 2002 but which do not, however, conform to the requirements of 6.8.2.1.7 and special provision TE15 of 6.8.4 (b) applicable as from 1 January 2003 may still be used.

1.6.3.21 Fixed tanks (tank-vehicles) and demountable tanks constructed before 1 January 2003 in accordance with the requirements applicable up to 30 June 2001, which conform to the requirements of 6.8.2.2.10 but are not equipped with a pressure gauge or another suitable indicator, shall nevertheless be considered as being hermetically closed until the next periodic inspection according to 6.8.2.4.2 and not later than 31 December 2008.

1.6.3.22 to 1.6.3.24 *(Reserved)*

1.6.3.25 The date of the leakproofness test required by 6.8.2.4.3 need not be added to the tank plate required by 6.8.2.5.1 until the first leakproofness test after 1 January 2005 is performed.

1.6.3.26 to 1.6.3.29 *(Reserved)*

1.6.3.30 Vacuum-operated waste fixed tanks (tank-vehicles) and demountable tanks constructed before 1 July 2005 in accordance with the requirements applicable up to 31 December 2004 but which do not conform to the requirements of 6.10.3.9 applicable as from 1 January 2005, may still be used.

1.6.3.31 to 1.6.3.39 *(Reserved)*

1.6.3.40 ***Fibre-reinforced plastics (FRP) tanks***

FRP tanks which have been constructed before 1 July 2002 in conformity with a design type approved before 1 July 2001 in accordance with the requirements of Appendix B.1c which were in force until 30 June 2001 may continue to be used until the end of their lifetime provided that all the requirements in force up to 30 June 2001 have been and continue to be complied with.

However, as from 1 July 2001, no new design type may be approved in accordance with the requirements in force until 30 June 2001.

1.6.4 Tank-containers and MEGCs

1.6.4.1 Tank-containers constructed before 1 January 1988 in accordance with the requirements in force up to 31 December 1987 but which do not, however, conform to the requirements applicable as from 1 January 1988, may still be used.

1.6.4.2 Tank-containers constructed before 1 January 1993 in accordance with the requirements in force up to 31 December 1992 but which do not, however, conform to the requirements applicable as from 1 January 1993, may still be used.

1.6.4.3 Tank-containers constructed before 1 January 1999 in accordance with the requirements in force up to 31 December 1998 but which do not, however, conform to the requirements applicable as from 1 January 1999, may still be used.

1.6.4.4 *(Reserved)*

1.6.4.5 Tank-containers intended for the carriage of substances of Class 2, which were constructed before 1 January 1997, may bear markings conforming to the requirements applicable up to 31 December 1996 until the next periodic test.

When, because of amendments to ADR, some proper shipping names of gases have been modified, it is not necessary to modify the names on the plate or on the shell itself (see 6.8.3.5.2 or 6.8.3.5.3), provided that the names of the gases on the tank-containers and MEGCs or on the plates [see 6.8.3.5.6 (b) or (c)] are adapted at the first periodic test thereafter.

1.6.4.6 *(Reserved)*

1.6.4.7 Tank-containers constructed before 1 January 1997 in accordance with the requirements in force up to 31 December 1996 but which do not, however, conform to the requirements of marginals 212 332 and 212 333 applicable as from 1 January 1997, may still be used.

1.6.4.8 and 1.6.4.9 *(Reserved)*

1.6.4.10 Tank-containers which were intended for the carriage of substances of UN No. 3257, built before 1 January 1997, but which do not conform, however, with the requirements applicable as from 1 January 1997, may continue to be used until 31 December 2006.

1.6.4.11 (*Reserved)*

1.6.4.12 Tank-containers and MEGCs constructed before 1 January 2003 in accordance with the requirements applicable up to 30 June 2001, but which do not, however, conform to the requirements applicable as from 1 July 2001, may still be used. Assignment to the tank codes in the design type approvals and the relevant markings shall be carried out prior to 1 January 2008. The marking of the alphanumerical codes of special provisions TC, TE and TA in accordance with 6.8.4 shall be carried out when the tank codes are assigned or at one of the tests in accordance with 6.8.2.4 subsequent to the assignment, but by 31 December 2008 at the latest.

1.6.4.13 Tank-containers constructed before 1 July 2003 in accordance with the requirements in force up to 31 December 2002 but which do not, however, conform to the requirements of 6.8.2.1.7 and special provision TE15 of 6.8.4 (b) applicable as from 1 January 2003 may still be used.

1.6.4.14 *(Reserved)*

1.6.4.15 The date of the leakproofness test required by 6.8.2.4.3 need not be added to the tank plate required by 6.8.2.5.1 until the first leakproofness test after 1 January 2005 is performed.

1.6.4.16 Tank-containers constructed before 1 January 2003 in accordance with the requirements applicable up to 30 June 2001, which conform to the requirements of 6.8.2.2.10 but are not equipped with a pressure gauge or another suitable indicator, shall nevertheless be considered as being hermetically closed until the next periodic inspection according to 6.8.2.4.2 and not later than 31 December 2007.

1.6.4.17 to 1.6.4.19 *(Reserved)*

1.6.4.20 Vacuum-operated waste tank-containers constructed before 1 July 2005 in accordance with the requirements applicable up to 31 December 2004 but which do not conform to the requirements of 6.10.3.9 applicable as from 1 January 2005, may still be used.

1.6.5 Vehicles

1.6.5.1 and 1.6.5.2 *(Reserved)*

1.6.5.3 Vehicles carrying demountable tanks and vehicles intended for the carriage of tank-containers or portable tanks registered before 1 January 1997, which were used, before that date, for the carriage of substances of UN No. 3257 and which do not fully comply with the requirements of 9.2.2, 9.2.3, 9.2.5, and 9.7.6 may continue to be used until 31 December 2006.

When a certificate of approval is required in accordance with 9.1.2.1.2, this certificate shall bear a mention indicating that the vehicle has been approved on the basis of 1.6.5.3.

1.6.5.4 As regards the construction of EX/II, EX/III, FL, OX and AT vehicles, the requirements of Part 9 in force up to 31 December 2004 may be applied until 31 December 2005.

1.6.5.5 Vehicles registered or entering into service before 1 January 2003 the electric equipment of which does not comply with the requirements of 9.2.2, 9.3.7 or 9.7.8 but complies with the requirements applicable until 30 June 2001 may still be used.

1.6.5.6 Transport units equipped with fire extinguishers in accordance with the provisions of 8.1.4 applicable until 31 December 2002 may continue to be used until 31 December 2007.

1.6.5.7 Complete or completed vehicles which have been type-approved before 31 December 2002 according to ECE Regulation No. 105[1] as amended by the 01 series of amendments or the corresponding provisions of Directive 98/91/EC[2] and which do not comply with the requirements of Chapter 9.2 but comply with the requirements applicable to the construction of base vehicles (marginals 220 100 to 220 540 of Appendix B.2) applicable until 30 June 2001 may continue to be approved and used provided they are first registered or they entered into service before 1 July 2003.

1.6.5.8 EX/II and EX/III vehicles which have been first approved before 1 July 2005 and which comply with the requirements of Part 9 in force up to 31 December 2004 but which do not however conform to the requirements applicable as from 1 January 2005 may continue to be used until 31 December 2014.

1.6.5.9 Tank-vehicles with fixed tanks with a capacity of more than 3 m^3 intended for the carriage of dangerous goods in the liquid or molten state tested with a pressure of less than 4 bar, which do not comply with the requirements of 9.7.5.2, first registered before 1 July 2004, may still be used.

---

[1] *ECE Regulation No. 105 (Uniform provisions concerning the approval of vehicles intended for the carriage of dangerous goods with regard to their specific constructional features).*

[2] *Directive 98/91/EC of the European Parliament and of the Council of 14 December 1998 relating to motor vehicles and their trailers intended for the transport of dangerous goods by road and amending Directive 70/156/EEC relating to the type approval of motor vehicles and their trailers (Official Journal of the European Communities No. L 011 of 16 January 1999, pp. 0025-0036).*

1.6.6 Class 7

1.6.6.1 ***Packages not requiring competent authority approval of design under the 1985 and 1985 (as amended 1990) editions of IAEA Safety Series No. 6***

Excepted packages, Industrial packages Type IP-1, Type IP-2 and Type IP-3 and Type A packages that did not require approval of design by the competent authority and which meet the requirements of the 1985 or 1985 (as amended 1990) Editions of IAEA Regulations for the Safe Transport of Radioactive Material (IAEA Safety Series No. 6) may continue to be used subject to the mandatory programme of quality assurance in accordance with the requirements of 1.7.3 and the activity limits and material restrictions of 2.2.7.7.

Any packaging modified, unless to improve safety, or manufactured after 31 December 2003, shall meet the requirements of ADR. Packages prepared for carriage not later than 31 December 2003 under the 1985 or 1985 (as amended 1990) Editions of IAEA Safety Series No. 6 may continue in transport. Packages prepared for carriage after this date shall meet the requirements of ADR.

1.6.6.2 ***Packages approved under the 1973, 1973 (as amended), 1985 and 1985 (as amended 1990) editions of IAEA Safety Series No. 6***

1.6.6.2.1 Packagings manufactured to a package design approved by the competent authority under the provisions of the 1973 or 1973 (as amended) Editions of IAEA Safety Series No. 6 may continue to be used, subject to: multilateral approval of package design, the mandatory programme of quality assurance in accordance with the applicable requirements of 1.7.3 and the activity limits and material restrictions of 2.2.7.7. No new manufacture of such packaging shall be permitted to commence. Changes in the design of the packaging or in the nature or quantity of the authorized radioactive contents which, as determined by the competent authority, would significantly affect safety shall require that the requirements of ADR be met. A serial number according to the provision of 5.2.1.7.5 shall be assigned to and marked on the outside of each packaging.

1.6.6.2.2 Packagings manufactured to a package design approved by the competent authority under the provisions of the 1985 or 1985 (as amended 1990) Editions of IAEA Safety Series No. 6 may continue to be used until 31 December 2003, subject to: the mandatory programme of quality assurance in accordance with the requirements of 1.7.3 and the activity limits and material restrictions of 2.2.7.7. After this date use may continue subject, additionally, to multilateral approval of package design. Changes in the design of the packaging or in the nature or quantity of the authorized radioactive contents which, as determined by the competent authority, would significantly affect safety shall require that the requirements of these Regulations be met. All packagings for which manufacture begins after 31 December 2006 shall meet the requirements of ADR.

1.6.6.3 ***Special form radioactive material approved under the 1973, 1973 (as amended), 1985 and 1985 (as amended 1990) Editions of IAEA Safety Series No. 6***

Special form radioactive material manufactured to a design which had received unilateral approval by the competent authority under the 1973, 1973 (as amended), 1985 or 1985 (as amended 1990) Editions of IAEA Safety Series No. 6 may continue to be used when in compliance with the mandatory programme of quality assurance in accordance with the applicable requirements of 1.7.3. All special form radioactive material manufactured after 31 December 2003 shall meet the requirements of ADR.

CHAPTER 1.7

GENERAL REQUIREMENTS CONCERNING CLASS 7

1.7.1 General

1.7.1.1 ADR establishes standards of safety which provide an acceptable level of control of the radiation, criticality and thermal hazards to persons, property and the environment that are associated with the carriage of radioactive material. These standards are based on the IAEA Regulations for the Safe Transport of Radioactive Material (1996 Edition, Revised) [TS-R-1 (ST-1, Revised)], IAEA, Vienna (2000) with the amendments adopted by the IAEA up to 2002. Explanatory material on TS-R-1 (ST-1, Revised) can be found in the "Advisory Material for the IAEA Regulations for the Safe Transport of Radioactive Material", Safety Guide No. TS-G-1.1 (ST-2) IAEA, Vienna (2002).

1.7.1.2 The objective of ADR is to protect persons, property and the environment from the effects of radiation during the carriage of radioactive material. This protection is achieved by requiring:

(a) Containment of the radioactive contents;

(b) Control of external radiation levels;

(c) Prevention of criticality; and

(d) Prevention of damage caused by heat.

These requirements are satisfied firstly by applying a graded approach to contents limits for packages and vehicles and to performance standards applied to package designs depending upon the hazard of the radioactive contents. Secondly, they are satisfied by imposing requirements on the design and operation of packages and on the maintenance of packagings, including a consideration of the nature of the radioactive contents. Finally, they are satisfied by requiring administrative controls including, where appropriate, approval by competent authorities.

1.7.1.3 ADR applies to the carriage of radioactive material by road including carriage which is incidental to the use of the radioactive material. Carriage comprises all operations and conditions associated with and involved in the movement of radioactive material; these include the design, manufacture, maintenance and repair of packaging, and the preparation, consigning, loading, carriage including in-transit storage, unloading and receipt at the final destination of loads of radioactive material and packages. A graded approach is applied to the performance standards in ADR that is characterized by three general severity levels:

(a) Routine conditions of carriage (incident free);

(b) Normal conditions of carriage (minor mishaps);

(c) Accident conditions of carriage.

1.7.2 Radiation protection programme

1.7.2.1 The carriage of radioactive material shall be subject to a Radiation protection programme which shall consist of systematic arrangements aimed at providing adequate consideration of radiation protection measures.

1.7.2.2 The nature and extent of the measures to be employed in the programme shall be related to the magnitude and likelihood of radiation exposures. The programme shall incorporate the requirements in 1.7.2.3, and 1.7.2.4, CV33 (1.1) and (1.4) of 7.5.11 and applicable emergency response procedures. Programme documents shall be available, on request, for inspection by the relevant competent authority.

1.7.2.3 Protection and safety shall be optimized in order that the magnitude of individual doses, the number of persons exposed, and the likelihood of incurring exposure shall be kept as low as reasonably achievable, economic and social factors being taken into account, and doses to persons shall be below the relevant dose limits. A structured and systematic approach shall be adopted and shall include consideration of the interfaces between carriage and other activities.

1.7.2.4 For occupational exposures arising from transport activities, where it is assessed that the effective dose:

(a) is most unlikely to exceed 1 mSv in a year, no special work patterns, detailed monitoring, dose assessment programmes or individual record keeping shall be required;

(b) is likely to be between 1 mSv and 6 mSv in a year, a dose assessment programme via work place monitoring or individual monitoring shall be conducted;

(c) is likely to exceed 6 mSv in a year, individual monitoring shall be conducted.

When individual monitoring or work place monitoring is conducted, appropriate records shall be kept.

1.7.3 Quality assurance

Quality assurance programmes based on international, national or other standards acceptable to the competent authority shall be established and implemented for the design, manufacture, testing, documentation, use, maintenance and inspection of all special form radioactive material, low dispersible radioactive material and packages and for carriage and in-transit storage operations to ensure compliance with the relevant provisions of ADR. Certification that the design specification has been fully implemented shall be available to the competent authority. The manufacturer, consignor or user shall be prepared to provide facilities for competent authority inspection during manufacture and use and to demonstrate to any cognizant competent authority that:

(a) the manufacturing methods and materials used are in accordance with the approved design specifications; and

(b) all packagings are periodically inspected and, as necessary, repaired and maintained in good condition so that they continue to comply with all relevant requirements and specifications, even after repeated use.

Where competent authority approval is required, such approval shall take into account and be contingent upon the adequacy of the quality assurance programme.

1.7.4 Special arrangement

1.7.4.1 Special arrangement shall mean those provisions, approved by the competent authority, under which consignments which do not satisfy all the requirements of ADR applicable to radioactive material may be transported.

NOTE: *Special arrangement is not considered to be a temporary derogation in accordance with 1.5.1.*

1.7.4.2 Consignments for which conformity with any provision applicable to Class 7 is impracticable shall not be transported except under special arrangement. Provided the competent authority is satisfied that conformity with the Class 7 provisions of ADR is impracticable and that the requisite standards of safety established by ADR have been demonstrated through alternative means the competent authority may approve special arrangement transport operations for single or a planned series of multiple consignments. The overall level of safety in carriage shall be at least equivalent to that which would be provided if all the applicable requirements had been met. For international consignments of this type, multilateral approval shall be required.

1.7.5 Radioactive material possessing other dangerous properties

In addition to the radioactive and fissile properties, any subsidiary risk of the contents of the package, such as explosiveness, flammability, pyrophoricity, chemical toxicity and corrosiveness, shall also be taken into account in the documentation, packing, labelling, marking, placarding, stowage, segregation and carriage, in order to be in compliance with all relevant provisions for dangerous goods of ADR.

1.7.6 Non-compliance

1.7.6.1 In the event of a non-compliance with any limit in ADR applicable to radiation level or contamination,

(a) the consignor shall be informed of the non-compliance by:

(i) the carrier if the non-compliance is identified during carriage; or

(ii) the consignee if the non-compliance is identified at receipt;

(b) the carrier, consignor or consignee, as appropriate shall:

(i) take immediate steps to mitigate the consequences of the non-compliance;

(ii) investigate the non-compliance and its causes, circumstances and consequences;

(iii) take appropriate action to remedy the causes and circumstances that led to the non-compliance and to prevent a recurrence of similar circumstances that led to the non-compliance; and

(iv) communicate to the competent authority(ies) on the causes of the non-compliance and on corrective or preventive actions taken or to be taken; and

(c) the communication of the non-compliance to the consignor and competent authority(ies), respectively, shall be made as soon as practicable and it shall be immediate whenever an emergency exposure situation has developed or is developing.

CHAPTER 1.8

CHECKS AND OTHER SUPPORT MEASURES TO ENSURE COMPLIANCE WITH SAFETY REQUIREMENTS

1.8.1 Administrative controls of dangerous goods

1.8.1.1 The competent authorities of the Contracting Parties may, on their national territory, at any time, conduct spot checks to verify whether the requirements concerning the carriage of dangerous goods have been met including, in accordance with 1.10.1.5, those concerning security measures.

These checks shall, however, be made without endangering persons, property or the environment and without major disruption of road services.

1.8.1.2 Participants in the carriage of dangerous goods (Chapter 1.4) shall, without delay, in the context of their respective obligations, provide the competent authorities and their agents with the necessary information for carrying out the checks.

1.8.1.3 The competent authorities may also, for the purposes of carrying out checks on the premises of the enterprises participating in the carriage of dangerous goods (Chapter 1.4), make inspections, consult the necessary documents and remove samples of dangerous goods or packagings for examination, provided that safety is not jeopardized thereby. The participants in the carriage of dangerous goods (Chapter 1.4) shall also make the vehicles or parts of vehicles and the equipment and installations accessible for the purpose of checking where this is possible and reasonable. They may, if they deem necessary, designate a person from the enterprise to accompany the representative of the competent authority.

1.8.1.4 If the competent authorities observe that the requirements of ADR have not been met, they may prohibit a consignment or interrupt a transport operation until the defects observed are rectified, or they may prescribe other appropriate measures. Immobilization may take place on the spot or at another place selected by the authorities for safety reasons. These measures shall not cause a major disruption in road services.

1.8.2 Mutual administrative support

1.8.2.1 The Contracting Parties shall agree on mutual administrative support for the implementation of ADR.

1.8.2.2 When a Contracting Party has reasons to observe that the safety of the carriage of dangerous goods on its territory is compromised as a result of very serious or repeated infringements by an enterprise which has its headquarters on the territory of another Contracting Party, it shall notify the competent authorities of this Contracting Party of such infringements. The competent authorities of the Contracting Party on the territory of which the very serious or repeated infringements were observed may request the competent authorities of the Contracting Party on the territory of which the enterprise has its headquarters to take appropriate measures against the offender(s). The transmission of data referring to persons shall not be permitted unless it is necessary for the prosecution of very serious or repeated infringements.

1.8.2.3 The authorities notified shall communicate to the competent authorities of the Contracting Party on the territory of which the infringements were observed, the measures which have, if necessary, been taken with respect to the enterprise.

1.8.3 Safety adviser

1.8.3.1 Each undertaking, the activities of which include the carriage, or the related packing, loading, filling or unloading, of dangerous goods by road shall appoint one or more safety advisers for the carriage of dangerous goods, responsible for helping to prevent the risks inherent in such activities with regard to persons, property and the environment.

1.8.3.2 The competent authorities of the Contracting Parties may provide that these requirements shall not apply to undertakings:

(a) the activities of which concern quantities in each transport unit smaller than those referred to in 1.1.3.6, 2.2.7.1.2 and in Chapters 3.3 and 3.4; or

(b) the main or secondary activities of which are not the carriage or the related loading or unloading of dangerous goods but which occasionally engage in the national carriage or the related loading or unloading of dangerous goods posing little danger or risk of pollution.

1.8.3.3 The main task of the adviser shall be, under the responsibility of the head of the undertaking, to seek by all appropriate means and by all appropriate action, within the limits of the relevant activities of that undertaking, to facilitate the conduct of those activities in accordance with the requirements applicable and in the safest possible way.

With regard to the undertaking’s activities, the adviser has the following duties in particular:

- monitoring compliance with the requirements governing the carriage of dangerous goods;
- advising his undertaking on the carriage of dangerous goods;
- preparing an annual report to the management of his undertaking or a local public authority, as appropriate, on the undertaking's activities in the carriage of dangerous goods. Such annual reports shall be preserved for five years and made available to the national authorities at their request.

The adviser's duties also include monitoring the following practices and procedures relating to the relevant activities of the undertaking:

- the procedures for compliance with the requirements governing the identification of dangerous goods being transported;
- the undertaking's practice in taking account, when purchasing means of transport, of any special requirements in connection with the dangerous goods being transported;
- the procedures for checking the equipment used in connection with the carriage, loading or unloading of dangerous goods;
- the proper training of the undertaking's employees and the maintenance of records of such training;
- the implementation of proper emergency procedures in the event of any accident or incident that may affect safety during the carriage, loading or unloading of dangerous goods;

- investigating and, where appropriate, preparing reports on serious accidents, incidents or serious infringements recorded during the carriage, loading or unloading of dangerous goods;

- the implementation of appropriate measures to avoid the recurrence of accidents, incidents or serious infringements;

- the account taken of the legal prescriptions and special requirements associated with the carriage of dangerous goods in the choice and use of sub-contractors or third parties;

- verification that employees involved in the carriage, loading or unloading of dangerous goods have detailed operational procedures and instructions;

- the introduction of measures to increase awareness of the risks inherent in the carriage, loading and unloading of dangerous goods;

- the implementation of verification procedures to ensure the presence on board the means of transport of the documents and safety equipment which must accompany transport and the compliance of such documents and equipment with the regulations;

- the implementation of verification procedures to ensure compliance with the requirements governing loading and unloading;

- the existence of the security plan indicated in 1.10.3.2.

1.8.3.4 The adviser may also be the head of the undertaking, a person with other duties in the undertaking, or a person not directly employed by that undertaking, provided that that person is capable of performing the duties of adviser.

1.8.3.5 Each undertaking concerned shall, on request, inform the competent authority or the body designated for that purpose by each Contracting Party of the identity of its adviser.

1.8.3.6 Whenever an accident affects persons, property or the environment or results in damage to property or the environment during carriage, loading or unloading carried out by the undertaking concerned, the adviser shall, after collecting all the relevant information, prepare an accident report to the management of the undertaking or to a local public authority, as appropriate. That report shall not replace any report by the management of the undertaking which might be required under any other international or national legislation.

1.8.3.7 An adviser shall hold a vocational training certificate, valid for transport by road. That certificate shall be issued by the competent authority or the body designated for that purpose by each Contracting Party.

1.8.3.8 To obtain a certificate, a candidate shall undergo training and pass an examination approved by the competent authority of the Contracting Party.

1.8.3.9 The main aims of the training shall be to provide candidates with sufficient knowledge of the risks inherent in the carriage of dangerous goods, of the laws, regulations and administrative provisions applicable to the modes of transport concerned and of the duties listed in 1.8.3.3.

1.8.3.10 The examination shall be organized by the competent authority or by an examining body designated by the competent authority.

The examining body shall be designated in writing. This approval may be of limited duration and shall be based on the following criteria:

- competence of the examining body;
- specifications of the form of the examinations the examining body is proposing;
- measures intended to ensure that examinations are impartial;
- independence of the body from all natural or legal persons employing safety advisers.

1.8.3.11 The aim of the examination is to ascertain whether candidates possess the necessary level of knowledge to carry out the duties incumbent upon a safety adviser as listed in 1.8.3.3, for the purpose of obtaining the certificate prescribed in sub-section 1.8.3.7, and it shall cover at least the following subjects:

(a) Knowledge of the types of consequences which may be caused by an accident involving dangerous goods and knowledge of the main causes of accidents;

(b) Requirements under national law, international conventions and agreements, with regard to the following in particular:

- classification of dangerous goods (procedure for classifying solutions and mixtures, structure of the list of substances, classes of dangerous goods and principles for their classification, nature of dangerous goods transported, physical, chemical and toxicological properties of dangerous goods);
- general packing provisions, provisions for tanks and tank-containers (types, code, marking, construction, initial and periodic inspection and testing);
- marking and labelling, placarding and orange plates marking (marking and labelling of packages, placing and removal of placards and orange plates);
- particulars in transport documents (information required);
- method of consignment and restrictions on dispatch (full load, carriage in bulk, carriage in intermediate bulk containers, carriage in containers, carriage in fixed or demountable tanks);
- transport of passengers;
- prohibitions and precautions relating to mixed loading;
- segregation of goods;
- limitation of the quantities carried and quantities exemptions;
- handling and stowage (loading and unloading - filling ratios -, stowage and segregation);
- cleaning and/or degassing before loading and after unloading;
- crews, vocational training;
- vehicle documents (transport document, instructions in writing, vehicle approval certificate, driver training certificate, copies of any derogations, other documents);
- instructions in writing (implementation of the instructions and crew protection equipment);

- supervision requirements (parking);
- traffic regulations and restrictions;
- operational discharges or accidental leaks of pollutants;
- requirements relating to transport equipment.

1.8.3.12 The examination shall consist of a written test which may be supplemented by an oral examination.

The written examination shall consist of two parts:

(a) Candidates shall receive a questionnaire. It shall include at least 20 open questions covering at least the subjects mentioned in the list in 1.8.3.11. However, multiple choice questions may be used. In this case, two multiple choice questions count as one open question. Amongst these subjects particular attention shall be paid to the following subjects:

- general preventive and safety measures;
- classification of dangerous goods;
- general packing provisions, including tanks, tank-containers, tank-vehicles, etc.;
- danger markings and labels;
- information in transport document;
- handling and stowage;
- crew, vocational training;
- vehicle documents and transport certificates;
- instructions in writing;
- requirements concerning transport equipment;

(b) Candidates shall undertake a case study in keeping with the duties of the adviser referred to in 1.8.3.3, in order to demonstrate that they have the necessary qualifications to fulfil the task of adviser.

1.8.3.13 The Contracting Parties may decide that candidates who intend working for undertakings specializing in the carriage of certain types of dangerous goods need only be questioned on the substances relating to their activities. These types of goods are:

- Class 1;
- Class 2;
- Class 7;
- Classes 3, 4.1, 4.2, 4.3, 5.1, 5.2, 6.1, 6.2, 8 and 9;
- UN Nos. 1202, 1203 and 1223.

The certificate prescribed in 1.8.3.7 shall clearly indicate that it is only valid for one type of the dangerous goods referred to in this sub-section and on which the adviser has been questioned under the conditions defined in 1.8.3.12.

1.8.3.14 The competent authority or the examining body shall keep a running list of the questions that have been included in the examination.

1.8.3.15 The certificate prescribed in 1.8.3.7 shall take the form laid down in 1.8.3.18 and shall be recognized by all Contracting Parties.

1.8.3.16 *Validity and renewal of certificates*

1.8.3.16.1 The certificate shall be valid for five years. The period of the validity of a certificate shall be extended from the date of its expiry for five years at a time where, during the year before its expiry, its holder has passed an examination. The examination shall be approved by the competent authority.

1.8.3.16.2 The aim of the examination is to ascertain that the holder has the necessary knowledge to carry out the duties set out in 1.8.3.3. The knowledge required is set out in 1.8.3.11 (b) and shall include the amendments to the regulations introduced since the award of the last certificate. The examination shall be held and supervised on the same basis as in 1.8.3.10 and 1.8.3.12 to 1.8.3.14. However, holders need not undertake the case study specified in 1.8.3.12 (b).

1.8.3.17 The requirements set out in 1.8.3.1 to 1.8.3.16 shall be considered to have been fulfilled if the relevant conditions of Council Directive 96/35/EC of 3 June 1996 on the appointment and vocational qualification of safety advisers for the transport of dangerous goods by road, rail and inland waterway [1] and of Directive 2000/18/EC of the European Parliament and of the Council of 17 April 2000 on minimum examination requirements for safety advisers for the transport of dangerous goods by road, rail or inland waterway [2] are applied.

---

[1] *Official Journal of the European Communities, No. L145 of 19 June 1996, page 10.*

[2] *Official Journal of the European Communities, No. L118 of 19 May 2000, page 41.*

1.8.3.18 ***Form of certificate***

Certificate of training as safety adviser for the transport of dangerous goods

Certificate No: .....

Distinguishing sign of the State issuing the certificate: .....

Surname: .....

Forename(s): .....

Date and place of birth: .....

Nationality: .....

Signature of holder: .....

Valid until ..... for undertakings which transport dangerous goods and for undertakings which carry out related loading or unloading:

□ by road □ by rail □ by inland waterway

Issued by: .....

Date: ..... Signature: .....

Extended until: ..... By: .....

Date: ..... Signature: .....

1.8.4 List of competent authorities and bodies designated by them

The Contracting Parties shall communicate to the Secretariat of the United Nations Economic Commission for Europe the addresses of the authorities and bodies designated by them which are competent in accordance with national law to implement ADR, referring in each case to the relevant requirement of ADR and giving the addresses to which the relevant applications should be made.

The Secretariat of the United Nations Economic Commission for Europe shall establish a list on the basis of the information received and shall keep it up-to-date. It shall communicate this list and the amendments thereto to the Contracting Parties [3].

1.8.5 Notifications of occurrences involving dangerous goods

1.8.5.1 If a serious accident or incident takes place during the carriage of dangerous goods on the territory of a Contracting Party, the carrier shall ascertain that a report conforming to the model prescribed in 1.8.5.4 is made to the competent authority of the Contracting Party concerned.

1.8.5.2 The Contracting Party shall in turn, if necessary, make a report to the Secretariat of the United Nations Economic Commission for Europe with a view to informing the other Contracting Parties.

1.8.5.3 An occurrence subject to report in accordance with 1.8.5.1 has occurred if dangerous goods were released or if there was an imminent risk of loss of product, if personal injury, material or environmental damage occurred, or if the authorities were involved and one or more of the following criteria has/have been met:

Personal injury means an occurrence in which death or injury directly relating to the dangerous goods carried has occurred, and where the injury

(a) requires intensive medical treatment;

(b) requires a stay in hospital of at least one day; or

(c) results in the inability to work for at least three consecutive days.

Loss of product means the release of dangerous goods

(a) of transport category 0 or 1 in quantities of 50 kg / 50 *l* or more;

(b) of transport category 2 in quantities of 333 kg / 333 *l* or more; or

(c) of transport category 3 or 4 in quantities of 1 000 kg / 1 000 *l* or more.

The loss of product criterion also applies if there was an imminent risk of loss of product in the above-mentioned quantities. As a rule, this has to be assumed if, owing to structural damage, the means of containment is no longer suitable for further carriage or if, for any other reason, a sufficient level of safety is no longer ensured (e.g. owing to distortion of tanks or containers, overturning of a tank or fire in the immediate vicinity).

---

[3] *A list of the competent authorities (up-to date on 1 June 2004) can be found in the Appendix to Part 1.*

If dangerous goods of Class 6.2 are involved, the obligation to report applies without quantity limitation.

In occurrences involving Class 7 material, the criteria for loss of product are:

(a) Any release of radioactive material from the packages;

(b) Exposure leading to a breach of the limits set out in the regulations for protection of workers and members of the public against ionizing radiation (Schedule II of IAEA Safety Series No. 115 – "International Basic Safety Standards for Protection Against Ionizing Radiation and for Safety of Radiation Sources"); or

(c) Where there is reason to believe that there has been a significant degradation in any package safety function (containment, shielding, thermal protection or criticality) that may have rendered the package unsuitable for continued carriage without additional safety measures.

NOTE: *See the requirements of 7.5.11 CV33 (6) for undeliverable consignments.*

Material damage or environmental damage means the release of dangerous goods, irrespective of the quantity, where the estimated amount of damage exceeds 50,000 Euros. Damage to any directly involved means of carriage containing dangerous goods and to the modal infrastructure shall not be taken into account for this purpose.

Involvement of authorities means the direct involvement of the authorities or emergency services during the occurrence involving dangerous goods and the evacuation of persons or closure of public traffic routes (roads/railways) for at least three hours owing to the danger posed by the dangerous goods.

If necessary, the competent authority may request further relevant information.

1.8.5.4 ***Model for report on occurrences during the carriage of dangerous goods***

Report on occurrences during the carriage of dangerous goods in accordance with RID/ADR section 1.8.5

Carrier/Railway infrastructure operator: .....……. Address: .....…… Contact name: .....…… Telephone: ..... Fax: .....……

(The competent authority shall remove this cover sheet before forwarding the report)

1. Mode	
□ Rail Wagon number (optional) .....……	□ Road Vehicle registration (optional) .....……..
2. Date and location of occurrence	
Year: …….. Month: ……. Day: ……. Time: ……....	
Rail □ Station □ Shunting/marshalling yard □ Loading/unloading/transhipment site Location / Country: …… or □ Open line: Description of line: …… Kilometres: …….……...	Road □ Built-up area □ Loading/unloading/transhipment site □ Open road Location / Country: …….…
3. Topography	
□ Gradient/incline □ Tunnel □ Bridge/Underpass □ Crossing	
4. Particular weather conditions	
□ Rain □ Snow □ Ice □ Fog □ Thunderstorm □ Storm Temperature: ..... °C	
5. Description of occurrence	
□ Derailment/Leaving the road □ Collision □ Overturning/Rolling over □ Fire □ Explosion □ Loss □ Technical fault Additional description of occurrence: .....……..... ....…… …… ……	

6. Dangerous goods involved						
UN Number [1]	Class	Packing Group	Estimated quantity of loss of products (kg or *l*) [2]	Means of containment [3]	Means of containment material	Type of failure of means of containment [4]

[1] For dangerous goods assigned to collective entries to which special provision 274 applies, also the technical name shall be indicated.

[2] For Class 7, indicate values according to the criteria in 1.8.5.3.

[3] Indicate the appropriate number
1 Packaging
2 IBC
3 Large packaging
4 Small container
5 Wagon
6 Vehicle
7 Tank-wagon
8 Tank-vehicle
9 Battery-wagon
10 Battery-vehicle
11 Wagon with demountable tanks
12 Demountable tank
13 Large container
14 Tank-container
15 MEGC
16 Portable tank

[4] Indicate the appropriate number
1 Loss
2 Fire
3 Explosion
4 Structural failure

7. Cause of occurrence (if clearly known)

□ Technical fault
□ Load security
□ Operational cause (rail operation)
□ Other:
.....
.....
……

8. Consequences of occurrence

Personal injury in connection with the dangerous goods involved:
□ Deaths (number: .....)
□ Injured (number: .....)

Loss of product:
□ Yes
□ No
□ Imminent risk of loss of product

Material/Environmental damage:
□ Estimated level of damage ≤ 50,000 Euros
□ Estimated level of damage > 50,000 Euros

Involvement of authorities:
□ Yes
□ Evacuation of persons for a duration of at least three hours caused by the dangerous goods involved
□ Closure of public traffic routes for a duration of at least three hours caused by the dangerous goods involved
□ No

If necessary, the competent authority may request further relevant information.

CHAPTER 1.9

TRANSPORT RESTRICTIONS BY THE COMPETENT AUTHORITIES

1.9.1 In accordance with Article 4, paragraph 1 of ADR, the entry of dangerous goods into the territory of Contracting Parties may be subject to regulations or prohibitions imposed for reasons other than safety during carriage. Such regulations or prohibitions shall be published in an appropriate form.

1.9.2 Subject to the provisions of 1.9.3, a Contracting Party may apply to vehicles engaged in the international carriage of dangerous goods by road on its territory certain additional provisions not included in ADR, provided that those provisions do not conflict with Article 2, paragraph 2 of the Agreement, and are contained in its domestic legislation applying equally to vehicles engaged in the domestic carriage of dangerous goods by road on the territory of that Contracting Party.

1.9.3 Additional provisions falling within the scope of 1.9.2 are as follows:

(a) Additional safety requirements or restrictions concerning vehicles using certain structures such as bridges or tunnels, vehicles using combined transport modes such as ferries or trains, or vehicles entering or leaving ports or other transport terminals;

(b) Requirements for vehicles to follow prescribed routes to avoid commercial or residential areas, environmentally sensitive areas, industrial zones containing hazardous installations or roads presenting severe physical hazards;

(c) Emergency requirements regarding routeing or parking of vehicles carrying dangerous goods resulting from extreme weather conditions, earthquake, accident, industrial action, civil disorder or military hostilities;

(d) Restrictions on movement of dangerous goods traffic on certain days of the week or year.

1.9.4 The competent authority of the Contracting Party applying on its territory any additional provisions within the scope of 1.9.3 (a) and (d) above shall notify the Secretariat of the United Nations Economic Commission for Europe of the additional provisions, which Secretariat shall bring them to the attention of the Contracting Parties.

CHAPTER 1.10

SECURITY PROVISIONS

NOTE : *For the purposes of this Chapter, security means measures or precautions to be taken to minimise theft or misuse of dangerous goods that may endanger persons, property or the environment.*

1.10.1 General provisions

1.10.1.1 All persons engaged in the carriage of dangerous goods shall consider the security requirements set out in this Chapter commensurate with their responsibilities.

1.10.1.2 Dangerous goods shall only be offered for carriage to carriers that have been appropriately identified.

1.10.1.3 Areas within temporary storage terminals, temporary storage sites, vehicle depots, berthing areas and marshalling yards used for the temporary storage during carriage of dangerous goods shall be properly secured, well lit and, where possible and appropriate, not accessible to the general public.

1.10.1.4 Each crew member of a vehicle carrying dangerous goods shall carry with them means of identification, which includes their photograph, during carriage.

1.10.1.5 Safety inspections in accordance with 1.8.1 and 7.5.1.1 shall cover appropriate security measures.

1.10.1.6 The competent authority shall maintain up-to-date registers of all valid training certificates for drivers stipulated in 8.2.1 issued by it or by any recognized organization.

1.10.2 Security training

1.10.2.1 The training and the refresher training specified in Chapter 1.3 shall also include elements of security awareness. The security refresher training need not be linked to regulatory changes only.

1.10.2.2 Security awareness training shall address the nature of security risks, recognising security risks, methods to address and reduce such risks and actions to be taken in the event of a security breach. It shall include awareness of security plans (if appropriate) commensurate with the responsibilities and duties of individuals and their part in implementing security plans.

1.10.3 Provisions for high consequence dangerous goods

1.10.3.1 "High consequence dangerous goods" are those which have the potential for misuse in a terrorist incident and which may, as a result, produce serious consequences such as mass casualties or mass destruction. The list of high consequence dangerous goods is provided in Table 1.10.5.

1.10.3.2 ***Security plans***

1.10.3.2.1 Carriers, consignors and other participants specified in 1.4.2 and 1.4.3 engaged in the carriage of high consequence dangerous goods (see Table 1.10.5) shall adopt, implement and comply with a security plan that addresses at least the elements specified in 1.10.3.2.2.

1.10.3.2.2 The security plan shall comprise at least the following elements:

(a) specific allocation of responsibilities for security to competent and qualified persons with appropriate authority to carry out their responsibilities;

(b) records of dangerous goods or types of dangerous goods concerned;

(c) review of current operations and assessment of security risks, including any stops necessary to the transport operation, the keeping of dangerous goods in the vehicle, tank or container before, during and after the journey and the intermediate temporary storage of dangerous goods during the course of intermodal transfer or transhipment between units;

(d) clear statement of measures that are to be taken to reduce security risks, commensurate with the responsibilities and duties of the participant, including:

- training;
- security policies (e.g. response to higher threat conditions, new employee/employment verification, etc.);
- operating practices (e.g. choice/use of routes where known, access to dangerous goods in intermediate temporary storage (as defined in (c)), proximity to vulnerable infrastructure etc.);
- equipment and resources that are to be used to reduce security risks;

(e) effective and up to date procedures for reporting and dealing with security threats, breaches of security or security incidents;

(f) procedures for the evaluation and testing of security plans and procedures for periodic review and update of the plans;

(g) measures to ensure the physical security of transport information contained in the security plan; and

(h) measures to ensure that the distribution of information relating to the transport operation contained in the security plan is limited to those who need to have it. Such measures shall not preclude the provision of information required elsewhere in ADR.

NOTE: *Carriers, consignors and consignees should co-operate with each other and with competent authorities to exchange threat information, apply appropriate security measures and respond to security incidents.*

1.10.3.3 Devices, equipment or arrangements to prevent the theft of the vehicle carrying high consequence dangerous goods (see Table 1.10.5) or its cargo, shall be applied and measures taken to ensure that these are operational and effective at all times. The application of these protective measures shall not jeopardize emergency response.

NOTE: *When appropriate and already fitted, the use of transport telemetry or other tracking methods or devices should be used to monitor the movement of high consequence dangerous goods (see Table 1.10.5).*

1.10.4 In accordance with the provisions of 1.1.3.6, the requirements of 1.10.1, 1.10.2, 1.10.3 and 8.1.2.1 (d) do not apply when the quantities carried in packages on a transport unit do not exceed those referred to in 1.1.3.6.3. In addition, the requirements of 1.10.1, 1.10.2, 1.10.3 and 8.1.2.1 (d) do not apply when the quantities carried in tanks or in bulk on a transport unit do not exceed those referred to in 1.1.3.6.3.

1.10.5 High consequence dangerous goods are those listed in the table below and carried in quantities greater than those indicated therein.

Table 1.10.5: List of high consequence dangerous goods

Class	Division	Substance or article	Quantity		
			Tank (*l*)	Bulk (kg)	Packages (kg)
1	1.1	Explosives	[a]	[a]	0
	1.2	Explosives	[a]	[a]	0
	1.3	Compatibility group C explosives	[a]	[a]	0
	1.5	Explosives	0	[a]	0
2		Flammable gases (classification codes including only the letter F)	3000	[a]	[b]
		Toxic gases (classification codes including letters T, TF, TC, TO, TFC or TOC) excluding aerosols	0	[a]	0
3		Flammable liquids of packing groups I and II	3000	[a]	[b]
		Desensitized explosives	[a]	[a]	0
4.1		Desensitized explosives	[a]	[a]	0
4.2		Packing group I substances	3000	[a]	[b]
4.3		Packing group I substances	3000	[a]	[b]
5.1		Oxidizing liquids of packing group I	3000	[a]	[b]
		Perchlorates, ammonium nitrate and ammonium nitrate fertilizers	3000	3000	[b]
6.1		Toxic substances of packing group I	0	[a]	0
6.2		Infectious substances of Category A	[a]	[a]	0
7		Radioactive material	3000 A_1 (special form) or 3000 A_2, as applicable, in Type B or Type C packages		
8		Corrosive substances of packing group I	3000	[a]	[b]

[a] *Not relevant.*
[b] *The provisions of 1.10.3 do not apply, whatever the quantity is.*

NOTE*:* *For purposes of non-proliferation of nuclear material the Convention on Physical Protection of Nuclear Material applies to international transport supported by IAEA INFCIRC/225(Rev.4).*

APPENDIX TO PART 1

LIST OF COMPETENT AUTHORITIES
(up-to-date on 1 June 2004)

NOTE 1: *This Appendix is not part of ADR. It has been included in this publication for information purposes.*

NOTE 2: *The list of competent authorities is periodically updated on the web site of the Secretariat of the United Nations Economic Commission for Europe (http://www.unece.org/trans/danger/publi/adr/comp.htm).*

AUSTRIA Bundesministerium für Verkehr, Innovation und Technologie Verwaltungsbereich Verkehr Abteilung II/ST8 Stubenring 1 A - 1010 VIENNA	Telephone: + 43 1 711 00 ext. 5152 Fax: + 43 1 711 00 15723 E-mail: gustav.kafka@bmvit.gv.at
AZERBAIJAN Azeravtonagliyyat Block 1054 Tbilisi av. 370602 BAKU	Telephone: + 89 9 22 98 56 09 + 89 9 22 31 91 11 Fax: + 89 922 98 38 19
BELARUS Committee of the Republic of Belarus for ensuring the safe performance of work in Industry and Atomic Energy (Promatomnadzor) Ul. Kazintsa 86/1 SU – 220108 MINSK Chairman : Mr. Vladimir Ivanovich YATSEVICH	Telephone: + 375 172 78 43 00 Fax: + 375 172 78 43 02
Contact person: Mr. Ivan Ivanovic VLASOV Chief of Inter-Branch Inspectorate for the safe carriage of dangerous goods by motor vehicle	Tel./Fax: + 375 172 78 43 45
BELGIUM Service public federal (SPF) Mobilité et Transports Service ADR Résidence Palace, Bloc C, 5ème étage Rue de la Loi 155, B-1000 BRUXELLES	Telephone: + 32 2 287 4493 to 4499 Telex: TRANS B 23285 Fax: + 32 2 287 4510 E-mail: claude.renard@mobilit.fgov.be
Goods of Class 1 Ministère des Affaires économiques Administration des Mines Service des explosifs Boulevard du Roi Albert II, 16 B - 1000 BRUXELLES	Telephone: + 32 2 206 48 01 Fax: + 32 2 206 57 51
Material of Class 7 Ministère de la Santé Publique Administration de l'hygiène publique Service de la Protection contre les radiations ionisantes Ravenstein 36 B - 1000 BRUXELLES	Telephone: + 32 2 289 21 81 + 32 2 289 21 83 Fax: + 32 2 289 21 82

BOSNIA AND HERZEGOVINA Ministry of Communication and Transport of Bosnia and Herzegovina Ministarstvo komunikacija i transporta BiH Trg BiH br.1 71 000 SARAJEVO BOSNA I HERCEGOVINA	Telephone: + 387 (33) 284 750 Fax: + 387 (33) 284 751
BULGARIA Ministry of Transport and Communications Road Transport Administration 5, Gurko Str. BG - 1202 SOFIA	Telephone: + 359 2 930 88 40 Fax: + 359 2 988 54 95 E-mail: tegrueva@mtc.government.bg
Goods of Class 1 Directorate of National Police 235 Slivnitsa Blvd BG - 1202 SOFIA	Telephone: + 359 2 982 22 31 Fax: + 359 2 983 56 77
Material of Class 7 Nuclear Regulation Agency 69 Shipchensky Prokhod Blvd. BG – 1574 SOFIA	Telephone: + 359 2 940 68 52 Fax: + 359 2 940 68 89 E-mail: rumig@bnsa.bas.bg
CROATIA Ministry of the Sea, Tourism, Transport and Development Road Transport Directorate Prisavlje 14, 10000 ZAGREB ***Contact person:*** Mr. Vjekoslav Bolanča Senior Adviser	Telephone: + 385 1 616 9417 Fax: + 385 1 619 5941 E-mail: vjekoslav.bolanca@mppv.hr
CYPRUS Head of Foreign Relations Department Ministry of Communications and Works 28, Acheon Str. Ayios Andreas 1424 NICOSIA	Telephone: + 372 2 800 122 Fax: + 372 2 575 462
CZECH REPUBLIC Ministry of Transport Nábřeží Ludvíka Svobody 12 PO BOX 9 CZ - 110 15 PRAGUE 1 - Nové město	Telephone: + 420 972 231 271 Fax: + 420 972 231 117 E-mail: Lubos.Rajdl@mdcr.cz
Material of Class 7 State Office for Nuclear Safety Senovážné náměstí 9 CZ - 110 00 PRAGUE 1	Telephone: + 420 221 624 666 Fax: + 420 221 624 398 E-mail: Vlastimil.Duchacek@sujb.cz
DENMARK The Ministry of Justice Slotsholmsgade DK - 1216 København K	Telephone: + 45 33 92 33 40 Fax: + 45 33 95 69 48 E-mail: jkn@jm.dk
Material of Class 7 National Institute of Radiation Hygiene Knapholm 7 DK – 2730 HERLEV	Telephone: + 45 44 54 34 54 Fax: + 45 44 54 34 50 E-mail: sis@sis.dk

ESTONIA Ministry of Economic Affairs and Communications Road and Railways Department Harju 11 15072 TALLIN ESTONIA	Telephone: + 372 625 64 99 Fax: + 372 631 3660 E-mail: mkm@mkm.ee
FINLAND Ministry of Transport and Communications Unit for transport of dangerous goods P.O. Box 31 FIN – 00023 Government, FINLAND Office: ETELAESPLANADI 16-18 Helsinki	Telephone: + 358 9 160 28563 Fax: + 358 9 160 28597 E-mail: Seija.Miettinen@mintc.fi
Material of Class 7 Finnish Centre for Radiation and Nuclear Safety PO Box.14 FIN-00881 Helsinki	Telephone: + 358 9 759 881 Fax: + 358 9 759 88500
FRANCE Ministère des transports Mission du Transport des matières dangereuses Arche Sud F - 92055 PARIS LA DEFENSE CEDEX	Telephone: + 33 1 40 81 17 28 Fax: + 33 1 40 81 10 65 E-mail: md.dtt@equipement.gouv.fr
Material of Class 7 Direction générale de la sûreté nucléaire et de la radioprotection (DGSNR) 6, place du Colonel Bourgoin F – 75512 PARIS Cedex 12	Telephone: + 33 1 40 19 86 17 Fax: + 33 1 40 19 86 24 E-mail: sd1.dgsnr@asn.minefi.gouv.fr
GERMANY Federal Ministry of Transport, Building and Housing Division "Transport of Dangerous Goods" (A33) Robert Schuman Platz 1 Postfach 20 01 00 D - 53175 BONN	Telephone: + 49 228 300 2640 Fax: + 49 228 300 3428 or 3429 E-mail: Helmut.Rein@bmvbw.bund.de ref-a33@bmvbw.bund.de
GREECE Ministry of Transport and Communications Xenophontos Str. 13 Syntagma Square GR - 10191 ATHENS	Telephone: + 30 1 325 12 11 or 19 Fax: + 30 1 323 7092 or 324 2570 Telex. 21.63.69 YSYG GR
HUNGARY Ministry of Economy and Transport P.O. Box 111 H - 1880 BUDAPEST	Telephone: + 36 1 374 28 68 or 67 Fax: + 36 1 312 46 64 E-mail: csuhay@gkm.hu bujdoso@gkm.hu
Approval of packagings, receptacles and tanks Main Inspectorate for Technical Safety Attila út 99 H-1012 BUDAPEST	Telephone: +36 1 334 69 30 Fax: +36 1 303 61 45
Material of Class 7 Hungarian Atomic Energy Authority P.O. Box 676 H - 1539 Budapest	Telephone: + 36 1 436 48 70 Fax: + 36 1 436 48 43

ITALY Ministero delle Infrastutture e dei Trasporti Dipartimento Transporti Terrestri e Sistemi Informativi e Statistici Direzione Generale della Motorizzazione e della Sicurezza del Trasporto Terrestre Ex UFFICIO MOT. 1 Via G. Caraci 36 I - 00157 ROME	Telephone: + 39 06 41 58 62 28 or 33 Fax: + 39 06 41 58 32 53 E-mail: a.simoni@infrastrutturetrasporti.it
Material of Class 7 Agenzia per la Protezione dell'Ambiente e per i Servizi Tecnici (APAT) Via V. Brancati 48 I - 00144 ROME	Telephone: + 39 06 50 07 2570 Fax: + 39 06 50 07 2584 E-mail: trivelloni@apat.it
KAZAKHSTAN Ministry of Transport and Communication Mr. Vadim P. ZVERKOV (Vice-Minister) Abai Avenue 49 473000 ASTANA	Telephone: +7 317 2 32 63 36 Fax: +7 317 2 32 86 55 E-mail: suleimenov@mail.ru
LATVIA Ministry of Transport Ecological Division 3 Gogola Street LV - 1743 RIGA	Telephone: + 371 70 28 312 Fax: + 371 72 17 180 E-mail: mariannah@sam.gov.lv
Material of Class 7 Radiation Safety Centre, 165, Maskavas Str. LV-1019 RIGA	Telephone: + 371 70 32 671 Fax: + 371 70 32 659 E-mail: a.salmins@rdc.gov.lv
LIECHTENSTEIN Ministry of Transport and Telecommunications Regierungsgebäude Städtle 49 FL - 9490 VADUZ	Telephone: + 75 236 60 12 Fax: + 75 236 60 28
LITHUANIA Ministry of Transport and Communications of the Republic of Lithuania Traffic Safety Department Mrs. Gitana Aukstuoliene Chief Specialist Dangerous Goods Transport Division Gedimino Av. 17, LT - 2679 VILNIUS	Telephone: + 370 5 239 38 26 + 370 5 239 39 89 Fax: + 370 5 212 43 35 E-mail: g.aukstuoliene@transp.lt
LUXEMBOURG Ministère des Transports du Grand-Duché de Luxembourg Mr. Marco Feltes, inspector P.O. Box 590 L - 2938 LUXEMBOURG	Telephone: + 352 478 44 23 Fax: + 352 24 18 17 Telex: 1465 civair lu E-mail: marco.feltes@tr.etat.lu

MOROCCO Ministère des Affaires Étrangères et de la Coopération Avenue Roosevelt Rabat	Telephone: + 037 76 28 41 + 037 76 11 23 + 037 76 15 83 Fax: + 037 76 55 08 + 037 76 46 79 Treaty Division: E-mail: ali@maec.gov.ma
NETHERLANDS Ministry of Transport and Public Works Directorate General of Transport Dangerous Goods Branch Nieuwe Uitleg 1 P.O. Box 20904 NL - 2500 EX The Hague	Telephone: + 31 70 351 15 80 Fax: + 31 70 351 14 79 E-mail: judith.marinissen@dgg.minvenw.nl
NORWAY Directorate for Civil Protection and Emergency Planning P.O. Box 2014 N - 3101 TØNSBERG	Telephone: + 47 33 41 25 00 (Switchboard) + 47 33 41 25 40 Fax: + 47 33 31 06 60 E-mail: arne.johansen@dsb.no
POLAND Ministry of Infrastructure 4/6, Chalubinskiego Street PL - 00-928 WARSAW	Telephone: + 48 22 830 01 68 Fax: + 48 22 621 02 02 + 48 22 630 12 45 E-mail: kgrzegorczyk@mi.gov.pl
Material of Class 7 National Atomic Energy Agency Ul. Krucza 36 PL-00-921 WARSAW	Telephone: + 48 22 628 27 22 Fax: + 48 22 629 01 64
Address applications for approvals and notifications to: Department for Regulatory Control and Radiation Applications ul. Konwaliowa 7 PL-03-194 WARSAW	Telephone: + 48 22 676 97 07 Fax: + 48 22 614 42 52 E-mail: szumski@dnz.paa.gov.pl
PORTUGAL Direcção-Geral de Transportes Terrestres Avenida das Forças Armadas, 40 P – 1649-022 LISBOA	Telephone: + 351 21 794 90 00 + 351 21 794 90 18 + 351 21 794 90 19 Fax: + 351 21 797 37 77 E-mail: jafranco@dgtt.pt
REPUBLIC OF MOLDOVA Ministry of Transport Foreign Relations Division 12 A Bucuriey Str. MD - 277 004 CHISINAU	Telephone: + 37 32 74 07 05 Fax: + 37 32 62 48 75
ROMANIA Ministry of Public Works, Transport and Housing Romanian Road Transport Authority- ARR Bd. Dinicu Golescu, 38, Sector 1 RO - 77113 BUCAREST	Telephone: + 40 1 312 15 19 Fax: + 40 1 312 10 81 E-mail: arutiera@arr.ro

RUSSIAN FEDERATION Ministry of Transport Rozhdestvenka Str. 1/1 RUS - 109 012 MOSCOW	Telephone: + 7 095 209 06 87 + 7 095 209 45 25 Fax: + 7 095 200 14 01 E-mail: PinsonAB@mt.mintrans.ru
SERBIA AND MONTENEGRO Ministry of Foreign Affairs of Serbia and Montenegro (sector for multilateral activities and sector for economic relations) Kneza Milosa 26 11000 BELGRADE	Telephone: + 381 11 306 87 28 Fax: + 381 11 306 87 29
SLOVAKIA Ministère des Transports, de la Poste et des Télécommunications Section du Transport routier et urbain Nám. Slobody 6 P.O. Box 100 SK - 810 05 BRATISLAVA	Telephone: + 421 2 594 94 716 Fax: + 421 2 524 42 202 E-mail: miroslav.goga@telecom.gov.sk
SLOVENIA Ministry of the Interior Stefanova 2 SI - 1501 LJUBLJANA	Telephone: + 386 1 472 42 42 Fax: + 386 1 230 24 05 E-mail: alojz.habic@mnz.si
SPAIN Dangerous Goods Commission (8° planta) Ministerio de Fomento Paseo de la Castellana, 67 E – 28 071 MADRID	Telephone: + 34 91 597 50 21 Fax: + 34 91 597 50 27 E-mail: piribas@mfom.es
Contact person: Mrs. Paloma Iribas Forcat Jefe del Gabinete de Ordenación y Coordinación del Transporte de Mercancías Peligrosas	
SWEDEN Swedish Rescue Services Agency Emergency Prevention Department Dangerous Goods and Seveso SE – 651 80 KARLSTAD	Telephone: + 46 54 13 50 00 (switchboard) Fax: + 46 54 13 56 20 E-mail: srv@srv.se
Material of Class 7 *(non fissile)* Swedish Radiation Protection Authority SE - 171 16 STOCKHOLM *(fissile)* Swedish Nuclear Power Inspectorate SE - 106 58 STOCKHOLM	Telephone: + 46 87 29 71 00 (switchboard) Fax: + 46 87 29 71 08 Telephone: + 46 86 98 84 00 (switchboard) Fax: + 46 86 61 90 86

SWITZERLAND Office fédéral des routes Règles de la circulation Mr. D. M. GILABERT CH - 3003 BERN	Telephone: + 41 31 323 42 90 Fax: + 41 31 323 74 55 + 41 31 323 43 03 E-mail: david.gilabert@astra.admin.ch
Material of Class 7 Approval of special form. Calculation of unlisted A values. Approvals and notifications for all type B packages, fissile packages, shipment and special arrangements: Swiss Federal Nuclear Safety Inspectorate Transport and Waste Management Section CH - 5232 VILLIGEN-HSK	Telephone: + 41 56 310 38 11 + 41 56 310 39 88 Fax: + 41 56 310 39 07
Import, export, transport and transit licences for nuclear materials and nuclear wastes: Federal Office of Energy Nuclear Energy Section CH - 3003 BERN Copy of Application to: Swiss Federal Nuclear Safety Inspectorate Transport and Waste Management Section CH- 5232 VILLIGEN-HSK	Telephone: + 41 31 322 56 31 + 41 31 322 56 32 Fax: + 41 31 322 00 78
Licences for the import/export of non nuclear and carriers' licences for radioactive materials: Federal Office of Public Health Division of Radiation Protection CH - 3003 BERN	Telephone: + 41 31 322 96 14 + 41 31 322 96 06 Fax: + 41 31 322 83 83
THE FORMER YUGOSLAV REPUBLIC OF MACEDONIA Minister of Transport and Communications Ul. Vasil Djorgov br. 35 MK - 91000 SKOPJE	
UKRAINE Ministry of Transport Main Department of Safety on Transport Schorsa Str. 7/9 UKR - 09688 KYIV	Fax: + 38 044 269 45 31
UNITED KINGDOM Department for Transport / Dangerous Goods Branch Great Minster House Zone 2/34 76 Marsham Street UK - LONDON SW1P 4DR	Telephone: + 44 20 79 44 2762 Fax: + 44 20 79 44 2039 E-mail: nigel.reader@dft.gsi.gov.uk
Other useful addresses in countries which are not Contracting Parties to ADR:	
IRELAND Health and Safety Authority 10 Hogan Place DUBLIN-2	Telephone: + 353 1 614 70 00 Fax: + 353 1 614 70 20 E.mail: driverexams@hsa.ie deirdre_sinnott@hsa.ie

PART 2

Classification

CHAPTER 2.1

GENERAL PROVISIONS

2.1.1 Introduction

2.1.1.1 The classes of dangerous goods according to ADR are the following:

Class 1	Explosive substances and articles
Class 2	Gases
Class 3	Flammable liquids
Class 4.1	Flammable solids, self-reactive substances and solid desensitized explosives
Class 4.2	Substances liable to spontaneous combustion
Class 4.3	Substances which, in contact with water, emit flammable gases
Class 5.1	Oxidizing substances
Class 5.2	Organic peroxides
Class 6.1	Toxic substances
Class 6.2	Infectious substances
Class 7	Radioactive material
Class 8	Corrosive substances
Class 9	Miscellaneous dangerous substances and articles

2.1.1.2 Each entry in the different classes has been assigned a UN number. The following types of entries are used:

A. Single entries for well defined substances or articles including entries for substances covering several isomers, e.g.:

UN No. 1090	ACETONE
UN No. 1104	AMYL ACETATES
UN No. 1194	ETHYL NITRITE SOLUTION

B. Generic entries for a well defined group of substances or articles, which are not n.o.s. entries, e.g.:

UN No. 1133	ADHESIVES
UN No. 1266	PERFUMERY PRODUCTS
UN No. 2757	CARBAMATE PESTICIDE, SOLID, TOXIC
UN No. 3101	ORGANIC PEROXIDE TYPE B, LIQUID

C. Specific n.o.s. entries covering a group of substances or articles of a particular chemical or technical nature, not otherwise specified, e.g.:

UN No. 1477	NITRATES, INORGANIC, N.O.S.
UN No. 1987	ALCOHOLS, N.O.S.

D. General n.o.s. entries covering a group of substances or articles having one or more dangerous properties, not otherwise specified, e.g.:

UN No. 1325	FLAMMABLE SOLID, ORGANIC, N.O.S.
UN No. 1993	FLAMMABLE LIQUID, N.O.S.

The entries defined under B., C. and D. are defined as collective entries.

2.1.1.3 For packing purposes, substances other than those of Classes 1, 2, 5.2, 6.2 and 7, and other than self-reactive substances of Class 4.1 are assigned to packing groups in accordance with the degree of danger they present:

Packing group I: Substances presenting high danger;
Packing group II: Substances presenting medium danger;
Packing group III: Substances presenting low danger.

The packing group(s) to which a substance is assigned is (are) indicated in Table A of Chapter 3.2.

2.1.2 Principles of classification

2.1.2.1 The dangerous goods covered by the heading of a class are defined on the basis of their properties according to sub-section 2.2.x.1 of the relevant class. Assignment of dangerous goods to a class and a packing group is made according to the criteria mentioned in the same sub-section 2.2.x.1. Assignment of one or several subsidiary risk(s) to a dangerous substance or article is made according to the criteria of the class or classes corresponding to those risks, as mentioned in the appropriate sub-section(s) 2.2.x.1.

2.1.2.2 All dangerous goods entries are listed in Table A of Chapter 3.2 in the numerical order of their UN Number. This table contains relevant information on the goods listed, such as name, class, packing group(s), label(s) to be affixed, packing and carriage provisions [1].

2.1.2.3 Dangerous goods which are listed or defined in sub-section 2.2.x.2 of each class are not to be accepted for carriage.

2.1.2.4 Goods not mentioned by name, i.e. goods not listed as single entries in Table A of Chapter 3.2 and not listed or defined in one of the above-mentioned sub-sections 2.2.x.2 shall be assigned to the relevant class in accordance with the procedure of section 2.1.3. In addition, the subsidiary risk (if any) and the packing group (if any) shall be determined. Once the class, subsidiary risk (if any) and packing group (if any) have been established the relevant UN number shall be determined. The decision trees in sub-sections 2.2.x.3 (list of collective entries) at the end of each class indicate the relevant parameters for selecting the relevant collective entry (UN number). In all cases the most specific collective entry covering the properties of the substance or article shall be selected, according to the hierarchy indicated in 2.1.1.2 by the letters B, C and D respectively. If the substance or article cannot be classified under entries of type B or C according to 2.1.1.2, then, and only then shall it be classified under an entry of type D.

2.1.2.5 On the basis of the test procedures of Chapter 2.3 and the criteria set out in sub-sections 2.2.x.1 of classes when it is so specified, it may be determined that a substance, solution or mixture of a certain class, mentioned by name in Table A of Chapter 3.2, does not meet the criteria of that class. In such a case, the substance, solution or mixture is deemed not to belong to that class.

2.1.2.6 For the purposes of classification, substances with a melting point or initial melting point of 20 °C or lower at a pressure of 101.3 kPa shall be considered to be liquids. A viscous substance for which a specific melting point cannot be determined shall be subjected to the ASTM D 4359-90 test or to the test for determining fluidity (penetrometer test) prescribed in 2.3.4.

---

[1] *An alphabetic list of these entries has been prepared by the secretariat and is reproduced in Table B of Chapter 3.2. This table is not an official part of the ADR.*

2.1.3 Classification of substances, including solutions and mixtures (such as preparations and wastes), not mentioned by name

2.1.3.1 Substances including solutions and mixtures not mentioned by name shall be classified according to their degree of danger on the basis of the criteria mentioned in sub-section 2.2.x.1 of the various classes. The danger(s) presented by a substance shall be determined on the basis of its physical and chemical characteristics and physiological properties. Such characteristics and properties shall also be taken into account when such experience leads to a more stringent assignment.

2.1.3.2 A substance not mentioned by name in Table A of Chapter 3.2 presenting a single hazard shall be classified in the relevant class under a collective entry listed in sub-section 2.2.x.3 of that class.

2.1.3.3 A solution or mixture containing only one dangerous substance mentioned by name in Table A of Chapter 3.2, together with one or more non-dangerous substance(s), shall be regarded as the dangerous substance listed by name, unless:

(a) The solution or mixture is specifically mentioned by name in Table A of Chapter 3.2; or

(b) It is quite clear from the entry for the dangerous substance that it is applicable only to the pure or technically pure substance; or

(c) The class, physical state or packing group of the solution or mixture is different from that of the dangerous substance.

In the cases referred to under (b) or (c) above, the solution or mixture shall be classified as a substance not mentioned by name in the relevant class under a collective entry listed in sub-section 2.2.x.3 of that class taking account of the subsidiary risks presented by that solution or mixture, if any, unless the solution or mixture do not meet the criteria of any class, in which case they are not subject to ADR.

2.1.3.4 Solutions and mixtures containing substances belonging to one of the entries mentioned in 2.1.3.4.1 or 2.1.3.4.2 shall be classified in accordance with the provisions of these paragraphs.

2.1.3.4.1 Solutions and mixtures containing one of the following substances mentioned by name shall always be classified under the same entry as the substance they contain, provided they do not have the hazard characteristics as indicated in 2.1.3.5.3:

- <u>Class 3</u>

  UN No. 1921 PROPYLENEIMINE, STABILIZED; UN No. 2481 ETHYL ISOCYANATE; UN No. 3064 NITROGLYCERIN SOLUTION IN ALCOHOL with more than 1% but not more than 5% nitroglycerin;

- <u>Class 6.1</u>

  UN No. 1051 HYDROGEN CYANIDE, STABILIZED, containing less than 3% water; UN No. 1185 ETHYLENEIMINE, STABILIZED; UN No. 1259 NICKEL CARBONYL; UN No. 1613 HYDROCYANIC ACID, AQUEOUS SOLUTION (HYDROGEN CYANIDE, AQUEOUS SOLUTION), with not more than 20% hydrogen cyanide; UN No. 1614 HYDROGEN CYANIDE, STABILIZED, containing not more than 3% water and absorbed in a porous inert material; UN No. 1994 IRON PENTACARBONYL; UN No. 2480 METHYL ISOCYANATE; UN No. 3294

HYDROGEN CYANIDE, SOLUTION IN ALCOHOL, with not more than 45% hydrogen cyanide;

- Class 8

  UN No. 1052 HYDROGEN FLUORIDE, ANHYDROUS; UN No. 1744 BROMINE or UN No. 1744 BROMINE SOLUTION; UN No. 1790 HYDROFLUORIC ACID with more than 85% hydrogen fluoride; UN No. 2576 PHOSPHORUS OXYBROMIDE, MOLTEN;

2.1.3.4.2 Solutions and mixtures containing a substance belonging to one of the following entries of Class 9:

UN No. 2315 POLYCHLORINATED BIPHENYLS, LIQUID;
UN No. 3151 POLYHALOGENATED BIPHENYLS, LIQUID;
UN No. 3151 POLYHALOGENATED TERPHENYLS, LIQUID;
UN No. 3152 POLYHALOGENATED BIPHENYLS, SOLID;
UN No. 3152 POLYHALOGENATED TERPHENYLS, SOLID; or
UN No. 3432 POLYCHLORINATED BIPHENYLS, SOLID

shall always be classified under the same entry of Class 9 provided that:

- they do not contain any additional dangerous component other than components of packing group III of classes 3, 4.1, 4.2, 4.3, 5.1, 6.1 or 8; and

- they do not have the hazard characteristics as indicated in 2.1.3.5.3.

2.1.3.5 Substances not mentioned by name in Table A of Chapter 3.2, having more than one hazard characteristic and solutions or mixtures containing several dangerous substances shall be classified under a collective entry (see 2.1.2.4) and packing group of the appropriate class in accordance with their hazard characteristics. Such classification according to the hazard characteristics shall be carried out as follows:

2.1.3.5.1 The physical and chemical characteristics and physiological properties shall be determined by measurement or calculation and the substance, solution or mixture shall be classified according to the criteria mentioned in sub-section 2.2.x.1 of the various classes.

2.1.3.5.2 If this determination is not possible without disproportionate cost or effort (as for some kinds of wastes), the substance, solution or mixture shall be classified in the class of the component presenting the major hazard.

2.1.3.5.3 If the hazard characteristics of the substance, solution or mixture fall within more than one class or group of substances listed below then the substance, solution or mixture shall be classified in the class or group of substances corresponding to the major hazard on the basis of the following order of precedence:

(a) Material of Class 7 (apart from radioactive material in excepted packages where the other hazardous properties take precedence);

(b) Substances of Class 1;

(c) Substances of Class 2;

(d) Liquid desensitized explosives of Class 3;

(e) Self-reactive substances and solid desensitized explosives of Class 4.1;

(f) Pyrophoric substances of Class 4.2;

(g) Substances of Class 5.2;

(h) Substances of Class 6.1 or Class 3 which, on the basis of their inhalation toxicity, are to be classified under Packing group I (Substances meeting the classification criteria of Class 8 and having an inhalation toxicity of dust and mist (LC_{50}) in the range of Packing group I and a toxicity through oral ingestion or dermal contact only in the range of Packing group III or less, shall be allocated to Class 8);

(i) Infectious substances of Class 6.2.

2.1.3.5.4 If the hazard characteristics of the substance fall within more than one class or group of substances not listed in 2.1.3.5.3 above, the substance shall be classified in accordance with the same procedure but the relevant class shall be selected according to the precedence of hazards table in 2.1.3.10.

2.1.3.6 The most specific applicable collective entry (see 2.1.2.4) shall always be used, i.e. a general n.o.s. entry shall only be used if a generic entry or a specific n.o.s. entry cannot be used.

2.1.3.7 Solutions and mixtures of oxidizing substances or substances with an oxidizing subsidiary risk may have explosive properties. In such a case they are not to be accepted for carriage unless they meet the requirements for Class 1.

2.1.3.8 For the purposes of ADR, substances, solutions and mixtures (such as preparations and wastes) which cannot be assigned to Classes 1 to 8 or Class 9 entries other than UN Nos. 3077 and 3082, but which may be assigned to UN Nos. 3077 or 3082 on the basis of the test methods and criteria of section 2.3.5 shall be considered to be pollutant to the aquatic environment.

2.1.3.9 Wastes that do not meet the criteria for classification in classes 1 to 9 but are covered by the *Basel Convention on the Control of Transboundary Movements of Hazardous Wastes and their Disposal* may be carried under UN Nos. 3077 or 3082.

2.1.3.10 Table of precedence of hazards

Class and packing group	4.1, II	4.1, III	4.2, II	4.2, III	4.3, I	4.3, II	4.3, III	5.1, I	5.1, II	5.1, III	6.1, I DERMAL	6.1, I ORAL	6.1, II	6.1, III	8, I	8, II	8, III	9
3, I	SOL LIQ 4.1 3, I	SOL LIQ 4.1 3, I	SOL LIQ 4.2 3, I	SOL LIQ 4.2 3, I	4.3, I	4.3, I	4.3, I	SOL LIQ 5.1, I 3, I	SOL LIQ 5.1, I 3, I	SOL LIQ 5.1, I 3, I	3, I	3, I	3, I	3, I	3, I	3, I	3, I	3, I
3, II	SOL LIQ 4.1 3, II	SOL LIQ 4.1 3, II	SOL LIQ 4.2 3, II	SOL LIQ 4.2 3, II	4.3, I	4.3, II	4.3, II	SOL LIQ 5.1, I 3, I	SOL LIQ 5.1, II 3, II	SOL LIQ 5.1, II 3, II	3, I	3, I	3, II	3, II	8, I	3, II	3, II	3, II
3, III	SOL LIQ 4.1 3, II	SOL LIQ 4.1 3, III	SOL LIQ 4.2 3, II	SOL LIQ 4.2 3, III	4.3, I	4.3, II	4.3, III	SOL LIQ 5.1, I 3, I	SOL LIQ 5.1, II 3, II	SOL LIQ 5.1, III 3, III	6.1, I	6.1, I	6.1, II	3, III [a]	8, I	8, II	3, III	3, III
4.1, II			4.2, II	4.2, II	4.3, I	4.3, II	4.3, II	5.1, I	4.1, II	4.1, II	6.1, I	6.1, I	SOL LIQ 4.1, II 6.1, II	SOL LIQ 4.1, II 6.1, II	8, I	SOL LIQ 4.1, II 8, II	SOL LIQ 4.1, II 8, II	4.1, II
4.1, III			4.2, II	4.2, III	4.3, I	4.3, II	4.3, III	5.1, I	4.1, II	4.1, III	6.1, I	6.1, I	6.1, II	SOL LIQ 4.1, III 6.1, III	8, I	8, II	SOL LIQ 4.1, III 8, III	4.1, III
4.2, II					4.3, I	4.3, II	4.3, II	5.1, I	4.2, II	4.2, II	6.1, I	6.1, I	4.2, II	4.2, II	8, I	4.2, II	4.2, II	4.2, II
4.2, III					4.3, I	4.3, II	4.3, III	5.1, I	5.1, II	4.2, III	6.1, I	6.1, I	6.1, II	4.2, III	8, I	8, II	4.2, III	4.2, III
4.3, I								5.1, I	4.3, I	4.3, I	6.1, I	4.3, I	4.3, I	4.3, I	4.3, I	4.3, I	4.3, I	4.3, I
4.3, II								5.1, I	4.3, II	4.3, II	6.1, I	4.3, I	4.3, II	4.3, II	8, I	4.3, II	4.3, II	4.3, II
4.3, III								5.1, I	5.1, II	4.3, III	6.1, I	6.1, I	6.1, II	4.3, III	8, I	8, II	4.3, III	4.3, III
5.1, I											5.1, I	5.1, I	5.1, I	5.1, I	5.1, I	5.1, I	5.1, I	5.1, I
5.1, II											6.1, I	5.1, I	5.1, II	5.1, II	8, I	5.1, II	5.1, II	5.1, II
5.1, III											6.1, I	6.1, I	6.1, II	5.1, III	8, I	8, II	5.1, III	5.1, III
6.1, I DERMAL															SOL LIQ 6.1, I 8, I	6.1, I	6.1, I	6.1, I
6.1, I ORAL															SOL LIQ 6.1, I 8, I	6.1, I	6.1, I	6.1, I
6.1, II INHAL															SOL LIQ 6.1, I 8, I	6.1, II	6.1, II	6.1, II
6.1, II DERMAL															SOL LIQ 6.1, I 8, I	SOL LIQ 6.1, II 8, II	6.1, II	6.1, II
6.1, II ORAL															8.1	SOL LIQ 6.1, II 8, II	6.1, II	6.1, II
6.1, III															8, I	8, II	8, III	6.1, III
8, I																		8, I
8, II																		8, II
8, III																		8, III

SOL = Solid substances and mixtures
LIQ = Liquid substances, mixtures and solutions
DERMAL = Dermal toxicity
ORAL = Oral toxicity
INHAL = Inhalation toxicity

[a] *Class 6.1 for pesticides*

NOTE 1: Examples to explain the use of the table

Classification of a single substance

Description of the substance to be classified:

An amine not mentioned by name meeting the criteria for Class 3, packing group II as well as those for Class 8, packing group I.

Procedure:

The intersection of line 3 II with column 8 I gives 8 I.
This amine has therefore to be classified in Class 8 under:

UN No. 2734 AMINES LIQUID, CORROSIVE, FLAMMABLE, N.O.S. or UN No. 2734 POLYAMINES, LIQUID, CORROSIVE, FLAMMABLE, N.O.S.
packing group I

Classification of a mixture

Description of the mixture to be classified:

Mixture consisting of a flammable liquid classified in Class 3, packing group III, a toxic substance in Class 6.1, packing group II and a corrosive substance in Class 8, packing group I.

Procedure:

The intersection of line 3 III with column 6.1 II gives 6.1 II.
The intersection of line 6.1 II with column 8 I gives 8 I LIQ.
This mixture not further defined has therefore to be classified in Class 8 under:

UN No. 2922 CORROSIVE LIQUID, TOXIC, N.O.S. packing group I.

NOTE 2: Examples for the classification of mixtures and solutions under a class and a packing group:

A phenol solution of Class 6.1, (II), in benzene of Class 3, (II) is to be classified in Class 3, (II); this solution is to be classified under UN No. 1992 FLAMMABLE LIQUID, TOXIC, N.O.S., Class 3, (II), by virtue of the toxicity of the phenol.

A solid mixture of sodium arsenate of Class 6.1, (II) and sodium hydroxide of Class 8, (II) is to be classified under UN No. 3290 TOXIC SOLID, CORROSIVE, INORGANIC, N.O.S., in Class 6.1 (II).

A solution of crude or refined naphthalene of Class 4.1, (III) in petrol of Class 3, (II), is to be classified under UN No. 3295 HYDROCARBONS, LIQUID, N.O.S. in Class 3, (II).

A mixture of hydrocarbons of Class 3, (III), and of polychlorinated biphenyls (PCB) of Class 9, (II), is to be classified under UN No. 2315 POLYCHLORINATED BIPHENYLS LIQUID or UN No. 3432 POLYCHLORINATED BIPHENYLS SOLID in Class 9, (II).

A mixture of propyleneimine of Class 3, and polychlorinated biphenyls (PCB) of Class 9, (II), is to be classified under UN No. 1921 PROPYLENEIMINE, INHIBITED in Class 3.

2.1.4 Classification of samples

2.1.4.1 When the class of a substance is uncertain and it is being carried for further testing, a tentative class, proper shipping name and UN number shall be assigned on the basis of the consignor's knowledge of the substance and application of:

(a) the classification criteria of Chapter 2.2; and

(b) the requirements of this Chapter.

The most severe packing group possible for the proper shipping name chosen shall be used.

Where this provision is used the proper shipping name shall be supplemented with the word "SAMPLE" (e.g., "FLAMMABLE LIQUID, N.O.S., SAMPLE"). In certain instances, where a specific proper shipping name is provided for a sample of a substance considered to meet certain classification criteria (e.g., GAS SAMPLE, NON-PRESSURIZED, FLAMMABLE, UN No. 3167) that proper shipping name shall be used. When an N.O.S. entry is used to carry the sample, the proper shipping name need not be supplemented with the technical name as required by special provision 274 of Chapter 3.3.

2.1.4.2 Samples of the substance shall be carried in accordance with the requirements applicable to the tentative assigned proper shipping name provided:

(a) The substance is not considered to be a substance not accepted for carriage by sub-sections 2.2.x.2 of Chapter 2.2 or by Chapter 3.2;

(b) The substance is not considered to meet the criteria for Class 1 or considered to be an infectious substance or a radioactive material;

(c) The substance is in compliance with 2.2.41.1.15 or 2.2.52.1.9 if it is a self-reactive substance or an organic peroxide, respectively;

(d) The sample is carried in a combination packaging with a net mass per package not exceeding 2.5 kg; and

(e) The sample is not packed together with other goods.

CHAPTER 2.2

CLASS SPECIFIC PROVISIONS

2.2.1 Class 1 Explosive substances and articles

2.2.1.1 *Criteria*

2.2.1.1.1 The heading of Class 1 covers:

(a) Explosive substances: solid or liquid substances (or mixtures of substances) capable by chemical reaction of producing gases at such a temperature and pressure and at such a speed as to cause damage to the surroundings.

Pyrotechnic substances: substances or mixtures of substances designed to produce an effect by heat, light, sound, gas or smoke or a combination of these as the result of non-detonating self-sustaining exothermic chemical reactions;

NOTE 1*: Substances which are not themselves explosive but which may form an explosive mixture of gas, vapour or dust are not substances of Class 1.*

NOTE 2*: Also excluded from Class 1 are: water- or alcohol-wetted explosives of which the water or alcohol content exceeds the limits specified and those containing plasticizers - these explosives are assigned to Class 3 or Class 4.1 - and those explosives which, on the basis of their predominant hazard, are assigned to Class 5.2.*

(b) Explosive articles: articles containing one or more explosive or pyrotechnic substances;

NOTE*: Devices containing explosive or pyrotechnic substances in such small quantity or of such a character that their inadvertent or accidental ignition or initiation during carriage would not cause any manifestation external to the device by projection, fire, smoke, heat or loud noise are not subject to the requirements of Class 1.*

(c) Substances and articles not mentioned above which are manufactured with a view to producing a practical effect by explosion or a pyrotechnic effect.

2.2.1.1.2 Any substance or article having or suspected of having explosive properties shall be considered for assignment to Class 1 in accordance with the tests, procedures and criteria prescribed in Part I, Manual of Tests and Criteria.

A substance or article assigned to Class 1 can only be accepted for carriage when it has been assigned to a name or n.o.s. entry listed in Table A of Chapter 3.2 and meets the criteria of the Manual of Tests and Criteria.

2.2.1.1.3 The substances and articles of Class 1 shall be assigned to a UN Number and a name or n.o.s. entry listed in Table A of Chapter 3.2. Interpretation of the names of substances and articles in Table A of Chapter 3.2 shall be based upon the glossary in 2.2.1.1.7.

Samples of new or existing explosive substances or articles carried for purposes including: testing, classification, research and development quality control, or as a commercial sample, other than initiating explosive, may be assigned to UN No. 0190 SAMPLES, EXPLOSIVE.

The assignment of explosive substances and articles not mentioned by name as such in Table A of Chapter 3.2 to an n.o.s entry of Class 1 or UN No. 0190 SAMPLES,

EXPLOSIVE as well as the assignment of certain substances the carriage of which is subject to a specific authorization by the competent authority according to the special provisions referred to in Column (6) of Table A of Chapter 3.2 shall be made by the competent authority of the country of origin. This competent authority shall also approve in writing the conditions of carriage of these substances and articles. If the country of origin is not a Contracting Party to ADR, the classification and the conditions of carriage shall be recognized by the competent authority of the first country Contracting Party to ADR reached by the consignment.

2.2.1.1.4 Substances and articles of Class 1 shall have been assigned to a division in accordance with 2.2.1.1.5 and to a compatibility group in accordance with 2.2.1.1.6. The division shall be based on the results of the tests described in 2.3.0 and 2.3.1 applying the definitions in 2.2.1.1.5. The compatibility group shall be determined in accordance with the definitions in 2.2.1.1.6. The classification code shall consist of the division number and the compatibility group letter.

2.2.1.1.5 *Definition of divisions*

Division 1.1 Substances and articles which have a mass explosion hazard (a mass explosion is an explosion which affects almost the entire load virtually instantaneously).

Division 1.2 Substances and articles which have a projection hazard but not a mass explosion hazard.

Division 1.3 Substances and articles which have a fire hazard and either a minor blast hazard or a minor projection hazard or both, but not a mass explosion hazard:

(a) combustion of which gives rise to considerable radiant heat; or

(b) which burn one after another, producing minor blast or projection effects or both.

Division 1.4 Substances and articles which present only a slight risk of explosion in the event of ignition or initiation during carriage. The effects are largely confined to the package and no projection of fragments of appreciable size or range is to be expected. An external fire shall not cause virtually instantaneous explosion of almost the entire contents of the package.

Division 1.5 Very insensitive substances having a mass explosion hazard which are so insensitive that there is very little probability of initiation or of transition from burning to detonation under normal conditions of carriage. As a minimum requirement they must not explode in the external fire test.

Division 1.6 Extremely insensitive articles which do not have a mass explosion hazard. The articles contain only extremely insensitive detonating substances and demonstrate a negligible probability of accidental initiation or propagation.

NOTE*: The risk from articles of Division 1.6 is limited to the explosion of a single article.*

2.2.1.1.6 *Definition of compatibility groups of substances and articles*

A Primary explosive substance.

B Article containing a primary explosive substance and not having two or more effective protective features. Some articles, such as detonators for blasting, detonator assemblies for blasting and primers, cap-type, are included, even though they do not contain primary explosives.

C Propellant explosive substance or other deflagrating explosive substance or article containing such explosive substance.

D Secondary detonating explosive substance or black powder or article containing a secondary detonating explosive substance, in each case without means of initiation and without a propelling charge, or article containing a primary explosive substance and having two or more effective protective features.

E Article containing a secondary detonating explosive substance, without means of initiation, with a propelling charge (other than one containing a flammable liquid or gel or hypergolic liquids).

F Article containing a secondary detonating explosive substance with its own means of initiation, with a propelling charge (other than one containing a flammable liquid or gel or hypergolic liquids) or without a propelling charge.

G Pyrotechnic substance, or article containing a pyrotechnic substance, or article containing both an explosive substance and an illuminating, incendiary, tear- or smoke-producing substance (other than a water-activated article or one which contains white phosphorus, phosphides, a pyrophoric substance, a flammable liquid or gel or hypergolic liquids).

H Article containing both an explosive substance and white phosphorus.

J Article containing both an explosive substance and a flammable liquid or gel.

K Article containing both an explosive substance and a toxic chemical agent.

L Explosive substance or article containing an explosive substance and presenting a special risk (e.g. due to water activation or the presence of hypergolic liquids, phosphides or a pyrophoric substance) necessitating isolation of each type.

N Articles containing only extremely insensitive detonating substances.

S Substance or article so packed or designed that any hazardous effects arising from accidental functioning are confined within the package unless the package has been degraded by fire, in which case all blast or projection effects are limited to the extent that they do not significantly hinder or prevent fire-fighting or other emergency response efforts in the immediate vicinity of the package.

NOTE 1*: Each substance or article, packed in a specified packaging, may be assigned to one compatibility group only. Since the criterion of compatibility group S is empirical, assignment to this group is necessarily linked to the tests for assignment of a classification code.*

NOTE 2*: Articles of compatibility groups D and E may be fitted or packed together with their own means of initiation provided that such means have at least two effective protective*

features designed to prevent an explosion in the event of accidental functioning of the means of initiation. Such packages shall be assigned to compatibility groups D or E.

***NOTE 3**: Articles of compatibility groups D and E may be packed together with their own means of initiation, which do not have two effective protective features (i.e. means of initiation assigned to compatibility group B), provided that they comply with mixed packing provision MP 21 of Section 4.1.10. Such packages shall be assigned to compatibility groups D or E.*

***NOTE 4**: Articles may be fitted or packed together with their own means of ignition provided that the means of ignition cannot function during normal conditions of carriage.*

***NOTE 5**: Articles of compatibility groups C, D and E may be packed together. Such packages shall be assigned to compatibility group E.*

2.2.1.1.7 *Glossary of names*

***NOTE 1:** The descriptions in the glossary are not intended to replace the test procedures, nor to determine the hazard classification of a substance or article of Class 1. Assignment to the correct division and a decision on whether Compatibility Group S is appropriate shall be based on testing of the product in accordance with the Manual of Tests and Criteria, Part I or by analogy with similar products which have already been tested and assigned in accordance with the procedures of the Manual of Tests and Criteria.*

***NOTE 2**: The figures given after the names refer to the relevant UN numbers (Column 2 of Table A of Chapter 3.2). For the classification code, see 2.2.1.1.4.*

AIR BAG INFLATORS or AIR BAG MODULES or SEAT-BELT PRETENSIONERS: UN No. 0503

Articles which contain pyrotechnic substances and are used as life-saving vehicle airbags or seat-belts.

AMMUNITION, ILLUMINATING, with or without burster, expelling charge or propelling charge: UN Nos. 0171, 0254, 0297

Ammunition designed to produce a single source of intense light for lighting up an area. The term includes illuminating cartridges, grenades and projectiles; and illuminating and target identification bombs.

***NOTE**: The following articles: CARTRIDGES, SIGNAL; SIGNAL DEVICES HAND; SIGNALS, DISTRESS; FLARES, AERIAL; FLARES, SURFACE are not included in this definition. They are listed separately.*

AMMUNITION, INCENDIARY, liquid or gel, with burster, expelling charge or propelling charge: UN No. 0247

Ammunition containing liquid or gelatinous incendiary substance. Except when the incendiary substance is an explosive per se, it also contains one or more of the following: a propelling charge with primer and igniter charge; a fuze with burster or expelling charge.

AMMUNITION, INCENDIARY, WHITE PHOSPHORUS with burster, expelling charge or propelling charge: UN Nos. 0243, 0244

Ammunition containing white phosphorus as incendiary substance. It also contains one or more of the following: a propelling charge with primer and igniter charge; a fuze with burster or expelling charge.

AMMUNITION, INCENDIARY with or without burster, expelling charge or propelling charge: UN Nos. 0009, 0010, 0300

Ammunition containing incendiary composition. Except when the composition is an explosive per se, it also contains one or more of the following: a propelling charge with primer and igniter charge; a fuze with burster or expelling charge.

AMMUNITION, PRACTICE: UN Nos. 0362, 0488

Ammunition without a main bursting charge, containing a burster or expelling charge. Normally it also contains a fuze and a propelling charge.

***NOTE**: GRENADES, PRACTICE are not included in this definition. They are listed separately.*

AMMUNITION, PROOF: UN No. 0363

Ammunition containing pyrotechnic substances, used to test the performance or strength of new ammunition, weapon components or assemblies.

AMMUNITION, SMOKE, WHITE PHOSPHORUS, with burster, expelling charge or propelling charge: UN Nos. 0245, 0246

Ammunition containing white phosphorus as a smoke-producing substance. It also contains one or more of the following: a propelling charge with primer and igniter charge; a fuze with burster or expelling charge. The term includes grenades, smoke.

AMMUNITION, SMOKE with or without burster, expelling charge or propelling charge: UN Nos. 0015, 0016, 0303

Ammunition containing a smoke-producing substance such as chlorosulphonic acid mixture or titanium tetrachloride; or a smoke-producing pyrotechnic composition based on hexachloroethane or red phosphorus. Except when the substance is an explosive per se, the ammunition also contains one or more of the following: a propelling charge with primer and igniter charge; a fuze with burster or expelling charge. The term includes grenades, smoke.

***NOTE:** SIGNALS, SMOKE are not included in this definition. They are listed separately.*

AMMUNITION, TEAR-PRODUCING, with burster, expelling charge or propelling charge: UN Nos. 0018, 0019, 0301

Ammunition containing a tear-producing substance. It also contains one or more of the following: a pyrotechnic substance; a propelling charge with primer and igniter charge; a fuze with burster or expelling charge.

ARTICLES, EXPLOSIVE, EXTREMELY INSENSITIVE (ARTICLES EEI): UN No. 0486

Articles containing only extremely insensitive detonating substances (EIDS) which demonstrate a negligible probability of accidental initiation or propagation under normal conditions of transport, and which have passed Test Series 7.

ARTICLES, PYROPHORIC: UN No. 0380

Articles which contain a pyrophoric substance (capable of spontaneous ignition when exposed to air) and an explosive substance or component. The term excludes articles containing white phosphorus.

ARTICLES, PYROTECHNIC, for technical purposes: UN Nos. 0428, 0429, 0430, 0431, 0432

Articles which contain pyrotechnic substances and are used for technical purposes such as heat generation, gas generation, theatrical effects, etc.

***NOTE**: The following articles: all ammunition; CARTRIDGES, SIGNAL; CUTTERS, CABLE, EXPLOSIVE; FIREWORKS; FLARES, AERIAL; FLARES, SURFACE; RELEASE DEVICES, EXPLOSIVE; RIVETS, EXPLOSIVE; SIGNAL DEVICES, HAND; SIGNALS, DISTRESS; SIGNALS, RAILWAY TRACK, EXPLOSIVES; SIGNALS, SMOKE are not included in this definition. They are listed separately.*

BLACK POWDER (GUNPOWDER), COMPRESSED or BLACK POWDER (GUNPOWDER), IN PELLETS: UN No. 0028

Substance consisting of a pelletized form of black powder.

BLACK POWDER (GUNPOWDER), granular or as meal: UN No. 0027

Substance consisting of an intimate mixture of charcoal or other carbon and either potassium nitrate or sodium nitrate, with or without sulphur.

BOMBS, WITH FLAMMABLE LIQUID, with bursting charge: UN Nos. 0399, 0400

Articles which are dropped from aircraft, consisting of a tank filled with inflammable liquid and bursting charge.

BOMBS, PHOTO-FLASH: UN No. 0038

Explosive articles which are dropped from aircraft to provide brief, intense illumination for photography. They contain a charge of detonating explosive without means of initiation or with means of initiation containing two or more effective protective features.

BOMBS, PHOTO-FLASH: UN No. 0037

Explosive articles which are dropped from aircraft to provide brief, intense illumination for photography. They contain a charge of detonating explosive with means of initiation not containing two or more effective protective features.

BOMBS, PHOTO-FLASH: UN Nos. 0039, 0299

Explosive articles which are dropped from aircraft to provide brief, intense illumination for photography. They contain a photo-flash composition.

BOMBS with bursting charge: UN Nos. 0034; 0035

Explosive articles which are dropped from aircraft, without means of initiation or with means of initiation containing two or more effective protective features.

BOMBS with bursting charge: UN Nos. 0033, 0291

Explosive articles which are dropped from aircraft, with means of initiation not containing two or more effective protective features.

BOOSTERS WITH DETONATOR: UN Nos. 0225, 0268

Articles consisting of a charge of detonating explosive with means of initiation. They are used to increase the initiating power of detonators or detonating cord.

BOOSTERS without detonator: UN Nos. 0042, 0283

Articles consisting of a charge of detonating explosive without means of initiation. They are used to increase the initiating power of detonators or detonating cord.

BURSTERS, explosive: UN No. 0043

Articles consisting of a small charge of explosive used to open projectiles or other ammunition in order to disperse their contents.

CARTRIDGES, FLASH: UN Nos. 0049, 0050

Articles consisting of a casing, a primer and flash powder, all assembled in one piece ready for firing.

CARTRIDGES FOR WEAPONS, BLANK: UN Nos. 0326, 0413, 0327, 0338, 0014

Ammunition consisting of a closed cartridge case with a centre or rim fire primer and a charge of smokeless or black powder but no projectile. It produces a loud noise and is used for training, saluting, propelling charge, starter pistols, etc. The term includes ammunition, blank.

CARTRIDGES FOR WEAPONS, INERT PROJECTILE: UN Nos. 0328, 0417, 0339, 0012

Ammunition consisting of a projectile without bursting charge but with a propelling charge with or without a primer. The articles may include a tracer, provided that the predominant hazard is that of the propelling charge.

CARTRIDGES FOR WEAPONS with bursting charge: UN Nos. 0006, 0321, 0412

Ammunition consisting of a projectile with a bursting charge without means of initiation or with means of initiation containing two or more effective protective features; and a propelling charge with or without a primer. The term includes fixed (assembled) ammunition, semi-fixed (partially assembled) ammunition and separate loading ammunition when the components are packed together.

CARTRIDGES FOR WEAPONS with bursting charge: UN Nos. 0005, 0007, 0348

Ammunition consisting of a projectile with a bursting charge with means of initiation not containing two or more effective protective features; and a propelling charge with or without

a primer. The term includes fixed (assembled) ammunition, semi-fixed (partially assembled) ammunition and separate loading ammunition when the components are packed together.

CARTRIDGES, OIL WELL: UN Nos. 0277, 0278

Articles consisting of a thin casing of fibreboard, metal or other material containing only propellant powder which projects a hardened projectile to perforate an oil well casing.

***NOTE**: CHARGES, SHAPED are not included in this definition. They are listed separately.*

CARTRIDGES, POWER DEVICE: UN Nos. 0275, 0276, 0323, 0381

Articles designed to accomplish mechanical actions. They consist of a casing with a charge of deflagrating explosive and a means of ignition. The gaseous products of the deflagration produce inflation, linear or rotary motion or activate diaphragms, valves or switches or project fastening devices or extinguishing agents.

CARTRIDGES, SIGNAL: UN Nos. 0054, 0312, 0405

Articles designed to fire coloured flares or other signals from signal pistols, etc.

CARTRIDGES, SMALL ARMS: UN Nos. 0417, 0339, 0012

Ammunition consisting of a cartridge case fitted with a centre or rim fire primer and containing both a propelling charge and solid projectile. They are designed to be fired in weapons of calibre not larger than 19.1 mm. Shot-gun cartridges of any calibre are included in this description.

***NOTE**: CARTRIDGES, SMALL ARMS, BLANK, are not included in this definition. They are listed separately. Some military small arms cartridges are not included in this definition. They are listed under CARTRIDGES FOR WEAPONS, INERT PROJECTILE.*

CARTRIDGES, SMALL ARMS, BLANK: UN Nos. 0014, 0327, 0338

Ammunition consisting of a closed cartridge case with a centre or rim fire primer and a charge of smokeless or black powder. The cartridge cases contain no projectiles. The cartridges are designed to be fired from weapons with a calibre of at most 19.1 mm and serve to produce a loud noise and are used for training, saluting, propelling charge, starter pistols, etc.

CASES, CARTRIDGE, EMPTY, WITH PRIMER: UN Nos. 0379; 0055

Articles consisting of a cartridge case made from metal, plastics or other non-inflammable material, in which the only explosive component is the primer.

CASES, COMBUSTIBLE, EMPTY, WITHOUT PRIMER: UN Nos. 0447, 0446

Articles consisting of a cartridge case made partly or entirely from nitrocellulose.

CHARGES, BURSTING, PLASTICS BONDED: UN Nos. 0457, 0458, 0459, 0460

Articles consisting of a charge of detonating explosive, plastics bonded, manufactured in a specific form without a casing and without means of initiation. They are designed as components of ammunition such as warheads.

CHARGES, DEMOLITION: UN No. 0048

Articles containing a charge of a detonating explosive in a casing of fibreboard, plastics, metal or other material. The articles are without means of initiation or with means of initiation containing two or more effective protective features.

***NOTE**: The following articles: BOMBS; MINES; PROJECTILES are not included in this definition. They are listed separately.*

CHARGES, DEPTH: UN No. 0056

Articles consisting of a charge of detonating explosive contained in a drum or projectile without means of initiation or with means of initiation containing two or more effective protective features. They are designed to detonate under water.

CHARGES, EXPLOSIVE, COMMERCIAL without detonator: UN Nos. 0442, 0443, 0444, 0445

Articles consisting of a charge of detonating explosive without means of initiation, used for explosive welding, jointing, forming and other metallurgical processes.

CHARGES, PROPELLING, FOR CANNON: UN Nos. 0242, 0279, 0414

Charges of propellant in any physical form for separate-loading ammunition for cannon.

CHARGES, PROPELLING: UN Nos. 0271, 0272, 0415, 0491

Articles consisting of a charge of a propellant charge in any physical form, with or without a casing, as a component of rocket motors or for reducing the drag of projectiles.

CHARGES, SHAPED, without detonator: UN Nos. 0059, 0439, 0440, 0441

Articles consisting of a casing containing a charge of detonating explosive with a cavity lined with rigid material, without means of initiation. They are designed to produce a powerful, penetrating jet effect.

CHARGES, SHAPED, FLEXIBLE, LINEAR: UN Nos. 0237, 0288

Articles consisting of a V-shaped core of a detonating explosive clad by a flexible sheath.

CHARGES, SUPPLEMENTARY, EXPLOSIVE: UN No. 0060

Articles consisting of a small removable booster placed in the cavity of a projectile between the fuze and the bursting charge.

COMPONENTS, EXPLOSIVE TRAIN, N.O.S.: UN Nos. 0382, 0383, 0384, 0461

Articles containing an explosive designed to transmit detonation or deflagration within an explosive train.

CONTRIVANCES, WATER-ACTIVATED with burster, expelling charge or propelling charge: UN Nos. 0248, 0249

Articles whose functioning depends upon physico-chemical reaction of their contents with water.

CORD, DETONATING, flexible: UN Nos. 0065, 0289

Article consisting of a core of detonating explosive enclosed in spun fabric and a plastics or other covering. The covering is not necessary if the spun fabric is sift-proof.

CORD (FUSE) DETONATING, metal clad: UN Nos. 0102, 0290

Article consisting of a core of detonating explosive clad by a soft metal tube with or without protective covering.

CORD (FUSE) DETONATING, MILD EFFECT, metal clad: UN No. 0104

Article consisting of a core of detonating explosive clad by a soft metal tube with or without a protective covering. The quantity of explosive substance is so small that only a mild effect is manifested outside the cord.

CORD, IGNITER: UN No. 0066

Article consisting of textile yarns covered with black powder or another fast burning pyrotechnic composition and of a flexible protective covering; or it consists of a core of black powder surrounded by a flexible woven fabric. It burns progressively along its length with an external flame and is used to transmit ignition from a device to a charge or primer.

CUTTERS, CABLE, EXPLOSIVE: UN No. 0070

Articles consisting of a knife-edged device which is driven by a small charge of deflagrating explosive into an anvil.

DETONATOR ASSEMBLIES, NON-ELECTRIC for blasting: UN Nos. 0360, 0361, 0500

Non-electric detonators assembled with and activated by such means as safety fuse, shock tube, flash tube or detonating cord. They may be of instantaneous design or incorporate delay elements. Detonating relays incorporating detonating cord are included.

DETONATORS, ELECTRIC for blasting: UN Nos. 0030, 0255, 0456

Articles specially designed for the initiation of blasting explosives. These detonators may be constructed to detonate instantaneously or may contain a delay element. Electric detonators are activated by an electric current.

DETONATORS FOR AMMUNITION: UN Nos. 0073, 0364, 0365, 0366

Articles consisting of a small metal or plastics tube containing explosives such as lead azide, PETN or combinations of explosives. They are designed to start a detonation train.

DETONATORS, NON-ELECTRIC for blasting: UN Nos. 0029, 0267, 0455

Articles specially designed for the initiation of blasting explosives. These detonators may be constructed to detonate instantaneously or may contain a delay element. Non-electric detonators are activated by such means as shock tube, flash tube, safety fuse, other igniferous device or flexible detonating cord. Detonating relays without detonating cord are included.

EXPLOSIVE, BLASTING, TYPE A: UN No. 0081

Substances consisting of liquid organic nitrates such as nitroglycerine or a mixture of such ingredients with one or more of the following: nitrocellulose; ammonium nitrate or other

inorganic nitrates; aromatic nitro-derivatives, or combustible materials, such as wood-meal and aluminium powder. They may contain inert components such as kieselguhr, and additives such as colouring agents and stabilizers. Such explosives shall be in powdery, gelatinous or elastic form. The term includes dynamite; gelatine, blasting and gelatine dynamites.

EXPLOSIVE, BLASTING, TYPE B: UN Nos. 0082, 0331

Substances consisting of

(a) a mixture of ammonium nitrate or other inorganic nitrates with an explosive such as trinitrotoluene, with or without other substances such as wood-meal and aluminium powder; or

(b) a mixture of ammonium nitrate or other inorganic nitrates with other combustible substances which are not explosive ingredients. In both cases they may contain inert components such as kieselguhr, and additives such as colouring agents and stabilizers. Such explosives must not contain nitroglycerine, similar liquid organic nitrates or chlorates.

EXPLOSIVE, BLASTING, TYPE C: UN No. 0083

Substances consisting of a mixture of either potassium or sodium chlorate or potassium, sodium or ammonium perchlorate with organic nitro-derivatives or combustible materials such as wood-meal or aluminium powder or a hydrocarbon. They may contain inert components such as kieselguhr and additives such as colouring agents and stabilizers. Such explosives must not contain nitroglycerine or similar liquid organic nitrates.

EXPLOSIVE, BLASTING, TYPE D: UN No. 0084

Substances consisting of a mixture of organic nitrated compounds and combustible materials such as hydrocarbons and aluminium powder. They may contain inert components such as kieselguhr and additives such as colouring agents and stabilizers. Such explosives must not contain nitroglycerine, similar liquid organic nitrates, chlorates and ammonium nitrate. The term generally includes plastic explosives.

EXPLOSIVES, BLASTING, TYPE E: UN Nos. 0241, 0332

Substances consisting of water as an essential ingredient and high proportions of ammonium nitrate or other oxidizers, some or all of which are in solution. The other constituents may include nitro-derivatives such as trinitrotoluene, hydrocarbons or aluminium powder. They may contain inert components such as kieselguhr and additives such as colouring agents and stabilizers. The term includes explosives, emulsion, explosives, slurry and explosives, watergel.

FIREWORKS: UN Nos. 0333, 0334, 0335, 0336, 0337

Pyrotechnic articles designed for entertainment.

FLARES, AERIAL: UN Nos. 0093, 0403, 0404, 0420, 0421;

Articles containing pyrotechnic substances which are designed to be dropped from an aircraft to illuminate, identify, signal or warn.

FLARES, SURFACE: UN Nos. 0092, 0418, 0419

Articles containing pyrotechnic substances which are designed for use on the surface to illuminate, identify, signal or warn.

FLASH POWDER: UN Nos. 0094, 0305

Pyrotechnic substance which, when ignited, produces an intense light.

FRACTURING DEVICES, EXPLOSIVE without detonator, for oil wells: UN No. 0099

Articles consisting of a charge of detonating explosive contained in a casing without means of initiation. They are used to fracture the rock around a drill shaft to assist the flow of crude oil from the rock.

FUSE, IGNITER, tubular, metal clad: UN No. 0103

Article consisting of a metal tube with a core of deflagrating explosive.

FUSE, NON-DETONATING: UN No. 0101

Article consisting of cotton yarns impregnated with fine black powder (quickmatch). It burns with an external flame and is used in ignition trains for fireworks, etc.

FUSE, SAFETY: UN No. 0105

Article consisting of a core of fine grained black powder surrounded by a flexible woven fabric with one or more protective outer coverings. When ignited, it burns at a predetermined rate without any external explosive effect.

FUZES, DETONATING: UN Nos. 0106, 0107, 0257, 0367

Articles with explosive components designed to produce a detonation in ammunition. They incorporate mechanical, electrical, chemical or hydrostatic components to initiate the detonation. They generally incorporate protective features.

FUZES, DETONATING with protective features: UN Nos. 0408, 0409, 0410

Articles with explosive components designed to produce a detonation in ammunition. They incorporate mechanical, electrical, chemical or hydrostatic components to initiate the detonation. The detonating fuze must incorporate two or more effective protective features.

FUZES, IGNITING: UN Nos. 0316, 0317, 0368

Articles with primary explosive components designed to produce a deflagration in ammunition. They incorporate mechanical, electrical, chemical or hydrostatic components to start the deflagration. They generally incorporate protective features.

GRENADES, hand or rifle, with bursting charge: UN Nos. 0284, 0285

Articles which are designed to be thrown by hand or to be projected by a rifle. They are without means of initiation or with means of initiation containing two or more effective protective features.

GRENADES, hand or rifle, with bursting charge: UN Nos. 0292, 0293

Articles which are designed to be thrown by hand or to be projected by a rifle. They are with means of initiation not containing two or more effective protective features.

GRENADES, PRACTICE, hand or rifle: UN Nos. 0110, 0372, 0318, 0452

Articles without a main bursting charge which are designed to be thrown by hand or to be projected by a rifle. They contain the priming device and may contain a spotting charge.

HEXOTONAL: UN No. 0393

Substance consisting of an intimate mixture of cyclotrimethylene-trinitramine (RDX), trinitrotoluene (TNT) and aluminium.

HEXOLITE (HEXOTOL), dry or wetted with less than 15 % water, by mass: UN No. 0118

Substance consisting of an intimate mixture of cyclotrimethylene-trinitramine (RDX) and trinitrotoluene (TNT). The term includes "Composition B".

IGNITERS: UN Nos. 0121, 0314, 0315, 0325, 0454

Articles containing one or more explosive substances designed to produce a deflagration in an explosive train. They may be actuated chemically, electrically or mechanically.

***NOTE**: The following articles: CORD, IGNITER; FUSE, IGNITER; FUSE, NON-DETONATING; FUZES, IGNITING; LIGHTERS, FUSE; PRIMERS, CAP TYPE; PRIMERS, TUBULAR are not included in this definition. They are listed separately.*

JET PERFORATING GUNS, CHARGED, oil well, without detonator: UN Nos. 0124, 0494

Articles consisting of a steel tube or metallic strip, into which are inserted shaped charges connected by detonating cord, without means of initiation.

LIGHTERS, FUSE: UN No. 0131

Articles of various design actuated by friction, percussion or electricity and used to ignite safety fuse.

MINES with bursting charge: UN Nos. 0137, 0138

Articles consisting normally of metal or composition receptacles filled with a detonating explosive, without means of initiation or with means of initiation containing two or more effective protective features. They are designed to be operated by the passage of ships, vehicles or personnel. The term includes "Bangalore torpedoes".

MINES with bursting charge: UN Nos. 0136, 0294

Articles consisting normally of metal or composition receptacles filled with a detonating explosive, with means of initiation not containing two or more effective protective features. They are designed to be operated by the passage of ships, vehicles or personnel. The term includes "Bangalore torpedoes".

OCTOLITE (OCTOL), dry or wetted with less than 15 % water, by mass: UN No. 0266

Substance consisting of an intimate mixture of cyclotetramethylene-tetranitramine (HMX) and trinitrotoluene (TNT).

OCTONAL: UN No. 0496

Substance consisting of an intimate mixture of cyclotetramethylenetetranitramine (HMX), trinitrotoluene (TNT) and aluminium.

PENTOLITE, dry or wetted with less than 15 % water, by mass: UN No. 0151

Substance consisting of an intimate mixture of pentaerythrite tetranitrate (PETN) and trinitrotoluene (TNT).

POWDER CAKE (POWDER PASTE), WETTED with not less than 17 % alcohol, by mass; POWDER CAKE (POWDER PASTE), WETTED with not less than 25 % water, by mass: UN Nos. 0433, 0159

Substance consisting of nitrocellulose impregnated with not more than 60 % of nitroglycerine or other liquid organic nitrates or a mixture of these.

POWDER, SMOKELESS: UN Nos. 0160, 0161

Substance based on nitrocellulose used as propellant. The term includes propellants with a single base (nitrocellulose (NC) alone), those with a double base (such as NC and nitroglycerine/(NG)) and those with a triple base (such as NC/NG/nitroguanidine).

***NOTE**: Cast, pressed or bag-charges of smokeless powder are listed under CHARGES, PROPELLING or CHARGES, PROPELLING, FOR CANON.*

PRIMERS, CAP TYPE: UN Nos. 0044, 0377, 0378

Articles consisting of a metal or plastics cap containing a small amount of primary explosive mixture that is readily ignited by impact. They serve as igniting elements in small arms cartridges and in percussion primers for propelling charges.

PRIMERS, TUBULAR: UN Nos. 0319, 0320, 0376

Articles consisting of a primer for ignition and an auxiliary charge of deflagrating explosive such as black powder used to ignite the propelling charge in a cartridge case for cannon, etc.

PROJECTILES, inert with tracer: UN Nos. 0345, 0424, 0425

Articles such as a shell or bullet, which are projected from a cannon or other gun, rifle or other small arm.

PROJECTILES with burster or expelling charge: UN Nos. 0346, 0347

Articles such as a shell or bullet, which are projected from a cannon or other gun. They are without means of initiation or with means of initiation containing two or more effective protective features. They are used to scatter dyes for spotting or other inert materials.

PROJECTILES with burster or expelling charge: UN Nos. 0426, 0427

Articles such as a shell or bullet, which are projected from a cannon or other gun. They are with means of initiation not containing two or more effective protective features. They are used to scatter dyes for spotting or other inert materials.

PROJECTILES with burster or expelling charge: UN Nos. 0434, 0435

Articles such as a shell or bullet, which are projected from a cannon or other gun, rifle or other small arm. They are used to scatter dyes for spotting or other inert materials.

PROJECTILES with bursting charge: UN Nos. 0168, 0169, 0344

Articles such as a shell or bullet, which are projected from a cannon or other gun. They are without means of initiation or with means of initiation containing two or more effective protective features.

PROJECTILES with bursting charge: UN Nos. 0167, 0324

Articles such as a shell or bullet, which are projected from a cannon or other gun. They are with means of initiation not containing two or more effective protective features.

PROPELLANT, LIQUID: UN Nos. 0495, 0497

Substance consisting of a deflagrating liquid explosive, used for propulsion.

PROPELLANT, SOLID: UN Nos. 0498, 0499, 0501

Substance consisting of a deflagrating solid explosive, used for propulsion.

RELEASE DEVICES, EXPLOSIVE: UN No. 0173

Articles consisting of a small charge of explosive with means of initiation and rods or links. They sever the rods or links to release equipment quickly.

RIVETS, EXPLOSIVE: UN No. 0174

Articles consisting of a small charge of explosive inside a metallic rivet.

ROCKET MOTORS: UN Nos. 0186, 0280, 0281

Articles consisting of a charge of explosive, generally a solid propellant, contained in a cylinder fitted with one or more nozzles. They are designed to propel a rocket or a guided missile.

ROCKET MOTORS, LIQUID FUELLED: UN Nos. 0395, 0396

Articles consisting of a liquid fuel within a cylinder fitted with one or more nozzles. They are designed to propel a rocket or a guided missile.

ROCKET MOTORS WITH HYPERGOLIC LIQUIDS with or without expelling charge: UN Nos. 0322, 0250

Articles consisting of a hypergolic fuel contained in a cylinder fitted with one or more nozzles. They are designed to propel a rocket or a guided missile.

ROCKETS, LINE THROWING: UN Nos. 0238, 0240, 0453

Articles consisting of a rocket motor which is designed to extend a line.

ROCKETS, LIQUID FUELLED with bursting charge: UN Nos. 0397, 0398

Articles consisting of a liquid fuel within a cylinder fitted with one or more nozzles and fitted with a warhead. The term includes guided missiles.

ROCKETS with bursting charge: UN Nos. 0181, 0182

Articles consisting of a rocket motor and a warhead without means of initiation or with means of initiation containing two or more effective protective features. The term includes guided missiles.

ROCKETS with bursting charge: UN Nos. 0180, 0295

Articles consisting of a rocket motor and a warhead with means of initiation not containing two or more effective protective features. The term includes guided missiles.

ROCKETS with expelling charge: UN Nos. 0436, 0437, 0438

Articles consisting of a rocket motor and a charge to expel the payload from a rocket head. The term includes guided missiles.

ROCKETS with inert head: UN Nos. 0183, 0502

Articles consisting of a rocket motor and an inert head. The term includes guided missiles.

SAMPLES, EXPLOSIVE, other than initiating explosive UN No. 0190

New or existing explosive substances or articles, not yet assigned to a name in Table A of Chapter 3.2 and carried in conformity with the instructions of the competent authority and generally in small quantities, inter alia, for the purposes of testing, classification, research and development, or quality control, or as commercial samples.

NOTE: *Explosive substances or articles already assigned to another name in Table A of Chapter 3.2 are not included in this definition.*

SIGNAL DEVICES, HAND: UN Nos. 0191, 0373

Portable articles containing pyrotechnic substances which produce visual signals or warnings. The term includes small surface flares such as highway or railway flares and small distress flares.

SIGNALS, DISTRESS, ship: UN Nos. 0194, 0195

Articles containing pyrotechnic substances designed to produce signals by means of sound, flame or smoke or any combination thereof.

SIGNALS, RAILWAY TRACK, EXPLOSIVE: UN Nos. 0192, 0193, 0492, 0493

Articles containing a pyrotechnic substance which explodes with a loud report when the article is crushed. They are designed to be placed on a rail.

SIGNALS, SMOKE: UN Nos. 0196, 0197, 0313, 0487

Articles containing pyrotechnic substances which emit smoke. In addition they may contain devices for emitting audible signals.

SOUNDING DEVICES, EXPLOSIVE: UN Nos. 0374, 0375

Articles consisting of a charge of detonating explosive, without means of initiation or with means of initiation containing two or more effective protective features. They are dropped from ships and function when they reach a predetermined depth or the sea bed.

SOUNDING DEVICES, EXPLOSIVE: UN Nos. 0204, 0296

Articles consisting of a charge of detonating explosive with means of initiation not containing two or more effective protective features. They are dropped from ships and function when they reach a predetermined depth or the sea bed.

SUBSTANCES, EXPLOSIVE, VERY INSENSITIVE (Substances, EVI), N.O.S.: UN No. 0482

Substances presenting a mass explosion hazard but which are so insensitive that there is very little probability of initiation or of transition from burning to detonation under normal conditions of transport, and which have passed Test Series 5.

TORPEDOES, LIQUID FUELLED with inert head: UN No. 0450

Articles consisting of a liquid explosive system to propel the torpedo through the water, with an inert head.

TORPEDOES, LIQUID FUELLED with or without bursting charge: UN No. 0449

Articles consisting of either a liquid explosive system to propel the torpedo through the water, with or without a warhead; or a liquid non-explosive system to propel the torpedo through the water, with a warhead.

TORPEDOES with bursting charge: UN No. 0451

Articles consisting of a non-explosive system to propel the torpedo through the water, and a warhead without means of initiation or with means of initiation containing two or more effective protective features.

TORPEDOES with bursting charge: UN No. 0329

Articles consisting of an explosive system to propel the torpedo through the water, and a warhead without means of initiation or with means of initiation containing two or more effective protective features.

TORPEDOES with bursting charge: UN No. 0330

Articles consisting of an explosive or non-explosive system to propel the torpedo through the water, and a warhead with means of initiation not containing two or more effective protective features.

TRACERS FOR AMMUNITION: UN Nos. 0212, 0306

Sealed articles containing pyrotechnic substances, designed to reveal the trajectory of a projectile.

TRITONAL: UN No. 0390

Substance consisting of trinitrotoluene (TNT) mixed with aluminium.

WARHEADS, ROCKET with burster or expelling charge: UN No. 0370

Articles consisting of an inert payload and a small charge of detonating or deflagrating explosive, without means of initiation or with means of initiation containing two or more effective protective features. They are designed to be fitted to a rocket motor to scatter inert material. The term includes warheads for guided missiles.

WARHEADS, ROCKET with burster or expelling charge: UN No. 0371

Articles consisting of an inert payload and a small charge of detonating or deflagrating explosive, with means of initiation not containing two or more effective protective features. They are designed to be fitted to a rocket motor to scatter inert material. The term includes warheads for guided missiles.

WARHEADS, ROCKET with bursting charge: UN Nos. 0286, 0287

Articles consisting of a detonating explosive, without means of initiation or with means of initiation containing two or more effective protective features. They are designed to be fitted to a rocket. The term includes warheads for guided missiles.

WARHEADS, ROCKET with bursting charge: UN No. 0369

Articles consisting of a detonating explosive, with means of initiation not containing two or more effective protective features. They are designed to be fitted to a rocket. The term includes warheads for guided missiles.

WARHEADS, TORPEDO with bursting charge: UN No. 0221

Articles consisting of a detonating explosive, without means of initiation or with means of initiation containing two or more effective protective features. They are designed to be fitted to a torpedo.

2.2.1.2 ***Substances and articles not accepted for carriage***

2.2.1.2.1 Explosive substances which are unduly sensitive according to the criteria of the Manual of Tests and Criteria, Part I, or are liable to spontaneous reaction, as well as explosive substances and articles which cannot be assigned to a name or n.o.s. entry listed in Table A of Chapter 3.2, shall not be accepted for carriage.

2.2.1.2.2 Articles of compatibility group K shall not be accepted for carriage (1.2K, UN No. 0020 and 1.3K, UN No. 0021).

2.2.1.3 *List of collective entries*

Classification code (see 2.2.1.1.4)	UN No.	Name of the substance or article
1.1A	0473	SUBSTANCES, EXPLOSIVE, N.O.S.
1.1B	0461	COMPONENTS, EXPLOSIVE TRAIN, N.O.S.
1.1C	0474	SUBSTANCES, EXPLOSIVE, N.O.S.
	0497	PROPELLANT, LIQUID
	0498	PROPELLANT, SOLID
	0462	ARTICLES, EXPLOSIVE, N.O.S.
1.1D	0475	SUBSTANCES, EXPLOSIVE, N.O.S.
	0463	ARTICLES, EXPLOSIVE, N.O.S.
1.1E	0464	ARTICLES, EXPLOSIVE, N.O.S.
1.1F	0465	ARTICLES, EXPLOSIVE, N.O.S.
1.1G	0476	SUBSTANCES, EXPLOSIVE, N.O.S.
1.1L	0357	SUBSTANCES, EXPLOSIVE, N.O.S.
	0354	ARTICLES, EXPLOSIVE, N.O.S.
1.2B	0382	COMPONENTS, EXPLOSIVE TRAIN, N.O.S.
1.2C	0466	ARTICLES, EXPLOSIVE, N.O.S.
1.2D	0467	ARTICLES, EXPLOSIVE, N.O.S.
1.2E	0468	ARTICLES, EXPLOSIVE, N.O.S.
1.2F	0469	ARTICLES, EXPLOSIVE, N.O.S.
1.2L	0358	SUBSTANCES, EXPLOSIVE, N.O.S.
	0248	CONTRIVANCES, WATER-ACTIVATED with burster, expelling charge or propelling charge
	0355	ARTICLES, EXPLOSIVE, N.O.S.
1.3C	0132	DEFLAGRATING METAL SALTS OF AROMATIC NITRO-DERIVATIVES, N.O.S.
	0477	SUBSTANCES, EXPLOSIVE, N.O.S.
	0495	PROPELLANT, LIQUID
	0499	PROPELLANT, SOLID
	0470	ARTICLES, EXPLOSIVE, N.O.S.
1.3G	0478	SUBSTANCES, EXPLOSIVE, N.O.S.
1.3L	0359	SUBSTANCES, EXPLOSIVE, N.O.S.
	0249	CONTRIVANCES, WATER-ACTIVATED with burster, expelling charge or propelling charge
	0356	ARTICLES, EXPLOSIVE, N.O.S.
1.4B	0350	ARTICLES, EXPLOSIVE, N.O.S.
	0383	COMPONENTS, EXPLOSIVE TRAIN, N.O.S.
1.4C	0479	SUBSTANCES, EXPLOSIVE, N.O.S.
	0501	PROPELLANT, SOLID
	0351	ARTICLES, EXPLOSIVE, N.O.S.

Classification code (see 2.2.1.1.4)	UN No.	Name of the substance or article
1.4D	0480	SUBSTANCES, EXPLOSIVE, N.O.S.
	0352	ARTICLES, EXPLOSIVE, N.O.S.
1.4E	0471	ARTICLES, EXPLOSIVE, N.O.S.
1.4F	0472	ARTICLES, EXPLOSIVE, N.O.S.
1.4G	0485	SUBSTANCES, EXPLOSIVE, N.O.S.
	0353	ARTICLES, EXPLOSIVE, N.O.S.
1.4S	0481	SUBSTANCES, EXPLOSIVE, N.O.S.
	0349	ARTICLES, EXPLOSIVE, N.O.S.
	0384	COMPONENTS, EXPLOSIVE TRAIN, N.O.S.
1.5D	0482	SUBSTANCES, EXPLOSIVE, VERY INSENSITIVE (SUBSTANCES, EVI) N.O.S.
1.6N	0486	ARTICLES, EXPLOSIVE, EXTREMELY INSENSITIVE (ARTICLES, EEI)
	0190	SAMPLES, EXPLOSIVE other than initiating explosive ***NOTE:*** *Division and Compatibility Group shall be defined as directed by the competent authority and according to the principles in 2.2.1.1.4.*

2.2.2 Class 2 Gases

2.2.2.1 *Criteria*

2.2.2.1.1 The heading of Class 2 covers pure gases, mixtures of gases, mixtures of one or more gases with one or more other substances and articles containing such substances.

A gas is a substance which:

(a) at 50 °C has a vapour pressure greater than 300 kPa (3 bar); or

(b) is completely gaseous at 20 °C at the standard pressure of 101.3 kPa.

NOTE 1: *UN No. 1052 HYDROGEN FLUORIDE, ANHYDROUS is nevertheless classified in Class 8.*

NOTE 2: *A pure gas may contain other components deriving from its production process or added to preserve the stability of the product, provided that the level of these components does not change its classification or its conditions of carriage, such as filling ratio, filling pressure, test pressure.*

NOTE 3: *N.O.S. entries in 2.2.2.3 may cover pure gases as well as mixtures.*

NOTE 4: *Carbonated beverages are not subject to the provisions of ADR.*

2.2.2.1.2 The substances and articles of Class 2 are subdivided as follows:

1. *Compressed gas:* a gas which when packaged under pressure for carriage is entirely gaseous at -50 °C; this category includes all gases with a critical temperature less than or equal to -50 °C;

2. *Liquefied gas:* a gas which when packaged under pressure for carriage is partially liquid at temperatures above -50 °C. A distinction is made between:

   High pressure liquefied gas: a gas with a critical temperature above -50 °C and equal to or below +65 °C; and

   Low pressure liquefied gas: a gas with a critical temperature above +65 °C;

3. *Refrigerated liquefied gas*: a gas which when packaged for carriage is made partially liquid because of its low temperature;

4. *Dissolved gas:* a gas which when packaged under pressure for carriage is dissolved in a liquid phase solvent;

5. Aerosol dispensers and receptacles, small, containing gas (gas cartridges);

6. Other articles containing gas under pressure;

7. Non-pressurized gases subject to special requirements (gas samples).

2.2.2.1.3 Substances and articles (except aerosols) of Class 2 are assigned to one of the following groups according to their hazardous properties, as follows:

A asphyxiant;

O oxidizing;

F flammable;

T toxic;

TF toxic, flammable;

TC toxic, corrosive;

TO toxic, oxidizing;

TFC toxic, flammable, corrosive;

TOC toxic, oxidizing, corrosive.

For gases and gas mixtures presenting hazardous properties associated with more than one group according to the criteria, the groups designated by letter T take precedence over all other groups. The groups designated by letter F take precedence over the groups designated by letters A or O.

NOTE 1: *In the UN Model Regulations, the IMDG Code and the ICAO Technical Instructions, gases are assigned to one of the following three divisions, based on the primary hazard:*

Division 2.1: *flammable gases (corresponding to the groups designated by the capital letter F);*
Division 2.2: *non-flammable, non-toxic gases (corresponding to the groups designated by the capital letters A or O);*
Division 2.3: *toxic gases (corresponding to the groups designated by the capital letter T i.e. T, TF, TC, TO, TFC and TOC).*

NOTE 2*: Receptacles, small containing gas (UN No. 2037) shall be assigned to the groups A to TOC according to the hazard of the contents. For aerosols (UN No. 1950), see 2.2.2.1.6.*

NOTE 3*: Corrosive gases are considered to be toxic, and are therefore assigned to the group TC, TFC or TOC.*

NOTE 4: *Mixtures containing more than 21% oxygen by volume shall be classified as oxidizing.*

2.2.2.1.4 If a mixture of Class 2 mentioned by name in Table A of Chapter 3.2 meets different criteria as mentioned in 2.2.2.1.2 and 2.2.2.1.5, this mixture shall be classified according to the criteria and assigned to an appropriate N.O.S. entry.

2.2.2.1.5 Substances and articles (except aerosols) of Class 2 which are not mentioned by name in Table A of Chapter 3.2 shall be classified under a collective entry listed in 2.2.2.3 in accordance with 2.2.2.1.2 and 2.2.2.1.3. The following criteria shall apply:

Asphyxiant gases

Gases which are non-oxidizing, non-flammable and non-toxic and which dilute or replace oxygen normally in the atmosphere.

Flammable gases

Gases which at 20 °C and a standard pressure of 101.3 kPa:

(a) are ignitable when in a mixture of 13% or less by volume with air; or

(b) have a flammable range with air of at least 12 percentage points regardless of the lower flammable limit.

Flammability shall be determined by tests or by calculation, in accordance with methods adopted by ISO (see ISO 10156:1996).

Where insufficient data are available to use these methods, tests by a comparable method recognized by the competent authority of the country of origin may be used.

If the country of origin is not a Contracting Party to ADR these methods shall be recognized by the competent authority of the first country Contracting Party to ADR reached by the consignment.

Oxidizing gases

Gases, which may, generally by providing oxygen, cause or contribute to the combustion of other material more than air does. Oxidizing ability is determined either by tests or by calculation methods adopted by ISO (see ISO 10156:1996).

Toxic gases

NOTE: *Gases meeting the criteria for toxicity in part or completely owing to their corrosivity are to be classified as toxic. See also the criteria under the heading "Corrosive gases" for a possible subsidiary corrosivity risk.*

Gases which:

(a) are known to be so toxic or corrosive to humans as to pose a hazard to health; or

(b) are presumed to be toxic or corrosive to humans because they have a LC_{50} value for acute toxicity equal to or less than 5 000 ml/m³ (ppm) when tested in accordance with 2.2.61.1.

In the case of gas mixtures (including vapours of substances from other classes) the following formula may be used:

$$LC_{50}\ \text{Toxic (mixture)} = \frac{1}{\sum_{i=1}^{n} \frac{f_i}{T_i}}$$

where f_i = mole fraction of the ith component substance of the mixture;

T_i = toxicity index of the ith component substance of the mixture.
The T_i equals the LC_{50} value as found in packing instruction P200 of 4.1.4.1.

When no LC_{50} value is listed in packing instruction P200 of 4.1.4.1, a LC_{50} value available in scientific literature shall be used.

When the LC_{50} value is unknown, the toxicity index is determined by using the lowest LC_{50} value of substances of similar physiological and chemical effects, or through testing if this is the only practical possibility.

Corrosive gases

Gases or gas mixtures meeting the criteria for toxicity completely owing to their corrosivity are to be classified as toxic with a subsidiary corrosivity risk.

A gas mixture that is considered to be toxic due to the combined effects of corrosivity and toxicity has a subsidiary risk of corrosivity when the mixture is known by human experience to be destructive to the skin, eyes or mucous membranes or when the LC_{50} value of the corrosive components of the mixture is equal to or less than 5 000 ml/m^3 (ppm) when the LC_{50} is calculated by the formula:

$$LC_{50}\ \text{Corrosive (mixture)} = \frac{1}{\sum_{i=1}^{n} \frac{f_{ci}}{T_{ci}}}$$

where fc_i = mole fraction of the ith corrosive component substance of the mixture;

Tc_i = toxicity index of the ith corrosive component substance of the mixture.

The Tci equals the LC_{50} value as found in packing instruction P200 of 4.1.4.1.

When no LC_{50} value is listed in packing instruction P200 of 4.1.4.1, a LC_{50} value available in scientific literature shall be used.

When the LC_{50} value is unknown the toxicity index is determined by using the lowest LC_{50} value of substances of similar physiological and chemical effects, or through testing if this is the only practical possibility.

2.2.2.1.6 *Aerosols*

Aerosols (UN No. 1950) are assigned to one of the following groups according to their hazardous properties, as follows:

A asphyxiant;

O oxidizing;

F flammable;

T toxic;

C corrosive;

CO corrosive, oxidizing;

FC flammable, corrosive;

TF toxic, flammable;

TC toxic, corrosive;

TO toxic, oxidizing;

TFC toxic, flammable, corrosive;

TOC toxic, oxidizing, corrosive.

The classification depends on the nature of the contents of the aerosol dispenser.

NOTE: *Gases, which meet the definition of toxic gases according to 2.2.2.1.5 or of pyrophoric gases according to packing instruction P200 in 4.1.4.1, shall not be used as a propellant in an aerosol dispenser. Aerosols with contents meeting the criteria for packing group I for toxicity or corrosivity shall not be accepted for carriage (see also 2.2.2.2.2).*

The following criteria shall apply:

(a) Assignment to group A shall apply when the contents do not meet the criteria for any other group according to sub-paragraphs (b) to (f) below;

(b) Assignment to group O shall apply when the aerosol contains an oxidizing gas according to 2.2.2.1.5;

(c) Assignment to group F shall apply if the contents include 85% by mass or more flammable components and the chemical heat of combustion is 30 kJ/g or more.

It shall not apply if the contents contain 1% by mass or less flammable components and the heat of combustion is less than 20 kJ/g.

Otherwise the aerosol shall be tested for flammability in accordance with the tests described in the *Manual of Tests and Criteria*, Part III, section 31. Extremely flammable and flammable aerosols shall be assigned to group F;

NOTE: *Flammable components are flammable liquids, flammable solids or flammable gases and gas mixtures as defined in Notes 1 to 3 of sub-section 31.1.3 of Part III of the Manual of Tests and Criteria. This designation does not cover pyrophoric, self-heating or water-reactive substances. The chemical heat of combustion shall be determined by one of the following methods ASTM D 240, ISO/FDIS 13943: 1999 (E/F) 86.1 to 86.3 or NFPA 30B.*

(d) Assignment to group T shall apply when the contents, other than the propellant of aerosol dispensers to be ejected, are classified as class 6.1, packing groups II or III;

(e) Assignment to group C shall apply when the contents, other than the propellant of aerosol dispensers to be ejected, meet the criteria for Class 8, packing groups II or III;

(f) When the criteria for more than one group amongst groups O, F, T, and C are met, assignment to groups CO, FC, TF, TC TO, TFC or TOC shall apply, as relevant.

2.2.2.2 ***Gases not accepted for carriage***

2.2.2.2.1 Chemically unstable substances of Class 2 shall not be accepted for carriage, unless the necessary steps have been taken to prevent all possibility of a dangerous reaction e.g. decomposition, dismutation or polymerisation under normal conditions during transport. To

this end particular care shall be taken to ensure that receptacles and tanks do not contain any substances liable to promote these reactions.

2.2.2.2.2 The following substances and mixtures shall not be accepted for carriage:

- UN No. 2186 HYDROGEN CHLORIDE, REFRIGERATED LIQUID;
- UN No. 2421 NITROGEN TRIOXIDE;
- UN No. 2455 METHYL NITRITE;
- Refrigerated liquefied gases which cannot be assigned to classification codes 3A, 3O or 3F;
- Dissolved gases which cannot be classified under UN Nos. 1001, 2073 or 3318;
- Aerosols where gases which are toxic according to 2.2.2.1.5 or pyrophoric according to packing instruction P200 in 4.1.4.1 are used as propellants;
- Aerosols with contents meeting the criteria for packing group I for toxicity or corrosivity (see 2.2.61 and 2.2.8);
- Receptacles, small, containing gases which are very toxic (LC_{50} lower than 200 ppm) or pyrophoric according to packing instruction P200 in 4.1.4.1.

2.2.2.3 *List of collective entries*

Compressed gases		
Classification code	**UN No.**	**Name of the substance or article**
1 A	1979	RARE GASES MIXTURE, COMPRESSED
	1980	RARE GASES AND OXYGEN MIXTURE, COMPRESSED
	1981	RARE GASES AND NITROGEN MIXTURE, COMPRESSED
	1956	COMPRESSED GAS, N.O.S.
1 O	3156	COMPRESSED GAS, OXIDIZING, N.O.S.
1 F	1964	HYDROCARBON GAS MIXTURE, COMPRESSED, N.O.S.
	1954	COMPRESSED GAS, FLAMMABLE, N.O.S.
1T	1955	COMPRESSED GAS, TOXIC, N.O.S.
1 TF	1953	COMPRESSED GAS, TOXIC, FLAMMABLE, N.O.S.
1 TC	3304	COMPRESSED GAS, TOXIC, CORROSIVE, N.O.S.
1 TO	3303	COMPRESSED GAS, TOXIC, OXIDIZING, N.O.S.
1 TFC	3305	COMPRESSED GAS, TOXIC, FLAMMABLE, CORROSIVE, N.O.S.
1 TOC	3306	COMPRESSED GAS, TOXIC, OXIDIZING, CORROSIVE, N.O.S.

Liquefied gases		
Classification code	**UN No.**	**Name of the substance or article**
2 A	1058	LIQUEFIED GASES, non-flammable, charged with nitrogen, carbon dioxide or air
	1078	REFRIGERANT GAS, N.O.S. such as mixtures of gases, indicated by the letter R..., which as: Mixture F1, have a vapour pressure at 70 °C not exceeding 1.3 MPa (13 bar) and a density at 50 °C not lower than that of dichlorofluoromethane (1.30 kg/l); Mixture F2, have a vapour pressure at 70 °C not exceeding 1.9 MPa (19 bar) and a density at 50 °C not lower than that of dichlorodifluoromethane (1.21 kg/l); Mixture F3, have a vapour pressure at 70 °C not exceeding 3 MPa (30 bar) and a density at 50 °C not lower than that of chlorodifluoromethane (1.09 kg/l). ***NOTE:*** *Trichlorofluoromethane (Refrigerant R 11), 1,1,2-trichloro-1,2,2-trifluoroethane (Refrigerant R 113), 1,1,1-trichloro-2,2,2-trifluoroethane (Refrigerant R 113a), 1-chloro-1,2,2-trifluoroethane (Refrigerant R 133) and 1-chloro-1,1,2-trifluoroethane (Refrigerant R 133b) are not substances of Class 2. They may, however, enter into the composition of mixtures F1 to F3.*
	1968	INSECTICIDE GAS, N.O.S.
	3163	LIQUEFIED GAS, N.O.S.
2 O	3157	LIQUEFIED GAS, OXIDIZING, N.O.S.
2 F	1010	BUTADIENES AND HYDROCARBON MIXTURE, STABILIZED, having a vapour pressure at 70 °C not exceeding 1.1 MPa (11 bar) and a density at 50 °C not lower than 0.525 kg/l. ***NOTE****: Butadienes, stabilized are also classified under UN No. 1010, see Table A of Chapter 3.2.*
	1060	METHYLACETYLENE AND PROPADIENE MIXTURE, STABILIZED such as mixtures of methylacetylene and propadiene with hydrocarbons, which as: Mixture P1, contain not more than 63% methylacetylene and propadiene by volume and not more than 24% propane and propylene by volume, the percentage of C_4- saturated hydrocarbons being not less than 14% by volume; and as Mixture P2, contain not more than 48% methylacetylene and propadiene by volume and not more than 50% propane and propylene by volume, the percentage of C_4- saturated hydrocarbons being not less than 5% by volume, as well as mixtures of propadiene with 1 to 4% methylacetylene.

Liquefied gases (cont'd)		
Classification code	**UN No.**	**Name of the substance or article**
2 F *(cont'd)*	1965	HYDROCARBON GAS MIXTURE, LIQUEFIED, N.O.S such as mixtures, which as: Mixture A, have a vapour pressure at 70 °C not exceeding 1.1 MPa (11 bar) and a density at 50 °C not lower than 0.525 kg/l; Mixture A01, have a vapour pressure at 70 °C not exceeding 1.6 MPa (16 bar) and a relative density at 50 °C not lower than 0.516 kg/l; Mixture A02, have a vapour pressure at 70 °C not exceeding 1.6 MPa (16 bar) and a relative density at 50 °C not lower than 0.505 kg/l; Mixture A0, have a vapour pressure at 70 °C not exceeding 1.6 MPa (16 bar) and a density at 50 °C not lower than 0.495 kg/l; Mixture A1, have a vapour pressure at 70 °C not exceeding 2.1 MPa (21 bar) and a density at 50 °C not lower than 0.485 kg/l; Mixture B1 have a vapour pressure at 70 °C not exceeding 2.6 MPa (26 bar) and a relative density at 50 °C not lower than 0.474 kg/l; Mixture B2 have a vapour pressure at 70 °C not exceeding 2.6 MPa (26 bar) and a relative density at 50 °C not lower than 0.463 kg/l; Mixture B, have a vapour pressure at 70 °C not exceeding 2.6 MPa (26 bar) and a density at 50 °C not lower than 0.450 kg/l; Mixture C, have a vapour pressure at 70 °C not exceeding 3.1 MPa (31 bar) and a relative density at 50 °C not lower than 0.440 kg/l; ***NOTE 1:*** *In the case of the foregoing mixtures, the use of the following names customary in the trade is permitted for describing these substances: for mixtures A, A01, A02 and A0: BUTANE; for mixture C: PROPANE.* ***NOTE 2:*** *UN No. 1075 PETROLEUM GASES, LIQUEFIED may be used as an alternative entry for UN No. 1965 HYDROCARBON GAS MIXTURE LIQUEFIED, N.O.S. for carriage prior to or following maritime or air carriage.*
	3354	INSECTICIDE GAS, FLAMMABLE, N.O.S.
	3161	LIQUEFIED GAS, FLAMMABLE, N.O.S.
2 T	1967	INSECTICIDE GAS, TOXIC, N.O.S.
	3162	LIQUEFIED GAS, TOXIC, N.O.S.
2 TF	3355	INSECTICIDE GAS, TOXIC, FLAMMABLE, N.O.S.
	3160	LIQUEFIED GAS, TOXIC, FLAMMABLE, N.O.S.
2 TC	3308	LIQUEFIED GAS, TOXIC, CORROSIVE, N.O.S.
2 TO	3307	LIQUEFIED GAS, TOXIC, OXIDIZING, N.O.S.
2 TFC	3309	LIQUEFIED GAS, TOXIC, FLAMMABLE, CORROSIVE, N.O.S.
2 TOC	3310	LIQUEFIED GAS, TOXIC, OXIDIZING, CORROSIVE, N.O.S.

Refrigerated liquefied gases		
Classification code	**UN No.**	**Name of the substance or article**
3 A	3158	GAS, REFRIGERATED LIQUID, N.O.S.
3 O	3311	GAS, REFRIGERATED LIQUID, OXIDIZING, N.O.S.
3 F	3312	GAS, REFRIGERATED LIQUID, FLAMMABLE, N.O.S.

Dissolved gases		
Classification code	**UN No.**	**Name of the substance or article**
4		Only substances listed in Table A of Chapter 3.2 are to be accepted for carriage.

Aerosols and receptacles, small, containing gas		
Classification code	**UN No.**	**Name of the substance or article**
5	1950	AEROSOLS
	2037	RECEPTACLES, SMALL CONTAINING GAS (GAS CARTRIDGES) without a release device, non-refillable

Other articles containing gas under pressure		
Classification code	**UN No.**	**Name of the substance or article**
6A	2857	REFRIGERATING MACHINES containing non-flammable, non-toxic gases or ammonia solutions (UN 2672)
	3164	ARTICLES, PRESSURIZED, PNEUMATIC (containing non-flammable gas) or
	3164	ARTICLES, PRESSURIZED, HYDRAULIC (containing non-flammable gas)
6F	3150	DEVICES, SMALL, HYDROCARBON GAS POWERED or
	3150	HYDROCARBON GAS REFILLS FOR SMALL DEVICES, with release device

Gas samples		
Classification code	**UN No.**	**Name of the substance or article**
7 F	3167	GAS SAMPLE, NON-PRESSURIZED, FLAMMABLE, N.O.S., not refrigerated liquid
7 T	3169	GAS SAMPLE, NON-PRESSURIZED, TOXIC, N.O.S., not refrigerated liquid
7 TF	3168	GAS SAMPLE, NON-PRESSURIZED, TOXIC, FLAMMABLE, N.O.S., not refrigerated liquid

2.2.3 Class 3 Flammable liquids

2.2.3.1 *Criteria*

2.2.3.1.1 The heading of Class 3 covers substances and articles containing substances of this Class which:

- are liquids according to subparagraph (a) of the definition for "liquid" in 1.2.1;
- have at 50 °C a vapour pressure of not more than 300 kPa (3 bar) and are not completely gaseous at 20 °C and at standard pressure of 101.3 kPa; and
- have a flash-point of not more than 61 °C (see 2.3.3.1 for the relevant test).

The heading of Class 3 also covers liquid substances and molten solid substances with a flash-point of more than 61°C and which are carried or handed over for carriage whilst heated at temperatures equal to or higher than their flash-point. These substances are assigned to UN No. 3256.

The heading of Class 3 also covers liquid desensitized explosives. Liquid desensitized explosives are explosive substances which are dissolved or suspended in water or other liquid substances, to form an homogeneous liquid mixture to suppress their explosive properties. Such entries in Table A of Chapter 3.2 are UN Nos. 1204, 2059, 3064, 3343, 3357 and 3379.

***NOTE 1**: Substances having a flash-point above 35 °C, non-toxic and non-corrosive, which do not sustain combustion according to the criteria of sub-section 32.2.5 of Part III of the Manual of Tests and Criteria, are not substances of Class 3; if, however, these substances are handed over for carriage and carried whilst heated at temperatures equal to or higher than their flash-point, they are substances of Class 3.*

***NOTE 2**: By derogation from paragraph 2.2.3.1.1 above, diesel fuel, gasoil, heating oil (light) having a flash-point above 61 °C and not more than 100 °C shall be deemed substances of Class 3, UN No. 1202.*

***NOTE 3:** Liquids which are highly toxic on inhalation, having a flash-point below 23 °C and toxic substances, having a flash-point of 23 °C or above are substances of Class 6.1 (see 2.2.61.1).*

***NOTE 4:** Flammable liquid substances and preparations used as pesticides, which are highly toxic, toxic or slightly toxic and have a flash-point of 23 °C or above are substances of Class 6.1 (see 2.2.61.1).*

2.2.3.1.2 The substances and articles of Class 3 are subdivided as follows:

F Flammable liquids, without subsidiary risk:

- F1 Flammable liquids having a flash-point of or below 61 °C;
- F2 Flammable liquids having a flash-point above 61 °C which are carried or handed over for carriage at or above their flash-point (elevated temperature substances);

FT Flammable liquids, toxic:

- FT1 Flammable liquids, toxic;
- FT2 Pesticides;

FC Flammable liquids, corrosive;

FTC Flammable liquids, toxic, corrosive;

D Liquid desensitized explosives.

2.2.3.1.3 Substances and articles classified in Class 3 are listed in Table A of Chapter 3.2. Substances not mentioned by name in Table A of Chapter 3.2 shall be assigned to the relevant entry of 2.2.3.3 and the relevant packing group in accordance with the provisions of this section. Flammable liquids shall be assigned to one of the following packing groups according to the degree of danger they present for carriage:

Packing group	Flash point (closed cup)	Initial boiling point
I	--	≤ 35°C
II [a]	< 23°C	> 35°C
III [a]	≥ 23°C ≤ 61°C	> 35°C

[a] *See also 2.2.3.1.4.*

For a liquid with (a) subsidiary risk(s), the packing group determined in accordance with the table above and the packing group based on the severity of the subsidiary risk(s) shall be considered; the classification and packing group shall then be determined in accordance with the table of precedence of hazards in 2.1.3.10.

2.2.3.1.4 Liquid or viscous mixtures and preparations, including those containing no more than 20% nitrocellulose with a nitrogen content not exceeding 12.6% (by dry mass), shall be assigned to packing group III only if the following requirements are met:

(a) the height of the separated layer of solvent is less than 3 % of the total height of the sample in the solvent-separation test (see Manual of Tests and Criteria, Part III, sub-section 32.5.1); and

(b) the viscosity [1] and flash-point are in accordance with the following table:

Kinematic viscosity (extrapolated) ν (at near-zero shear rate) mm^2/s at 23 °C	Flow time t in accordance with ISO 2431:1993		Flash-point in °C
	in s	Jet diameter in mm	
20 < ν ≤ 80	20 < t ≤ 60	4	above 17
80 < ν ≤ 135	60 < t ≤ 100	4	above 10
135 < ν ≤ 220	20 < t ≤ 32	6	above 5
220 < ν ≤ 300	32 < t ≤ 44	6	above -1
300 < ν ≤ 700	44 < t ≤ 100	6	above -5
700 < <	100 < t	6	-5 and below

***NOTE**: Mixtures containing more than 20% but not more than 55% nitrocellulose with a nitrogen content not exceeding 12.6% by dry mass are substances assigned to UN No. 2059.*

[1] *Viscosity determination: Where the substance concerned is non-Newtonian, or where a flow cup method of viscosity determination is otherwise unsuitable, a variable shear-rate viscometer shall be used to determine the dynamic viscosity coefficient of the substance, at 23 °C, at a number of shear rates. The values obtained are plotted against shear rate and then extrapolated to zero shear rate. The dynamic viscosity thus obtained, divided by the density, gives the apparent kinematic viscosity at near-zero shear rate.*

Mixtures having a flash-point below 23 °C and containing:

- *more than 55 % nitrocellulose, whatever their nitrogen content; or*

- *not more than 55 % nitrocellulose with a nitrogen content above 12.6 % by dry mass,*

are substances of Class 1 (UN Nos. 0340 or 0342) or of Class 4.1 (UN Nos. 2555, 2556 or 2557).

2.2.3.1.5 Non-toxic and non-corrosive solutions and homogeneous mixtures having a flash-point of 23 °C or above (viscous substances, such as paints or varnishes, excluding substances containing more than 20 % nitrocellulose) packed in receptacles of less than 450 litres capacity, are not subject to ADR if, in the solvent-separation test (see Manual of Tests and Criteria, Part III, sub-section 32.5.1), the height of the separated layer of solvent is less than 3 % of the total height, and if the substances at 23 °C have, in the flow cup conforming to ISO 2431:1993 having a jet 6 mm in diameter, a flow time of:

(a) not less than 60 seconds; or

(b) not less than 40 seconds and contain not more than 60 % of substances of Class 3.

2.2.3.1.6 If substances of Class 3, as a result of admixtures, come into categories of risk different from those to which the substances mentioned by name in Table A of Chapter 3.2 belong, these mixtures or solutions shall be assigned to the entries to which they belong on the basis of their actual degree of danger.

***NOTE**: For the classification of solutions and mixtures (such as preparations and wastes) see also 2.1.3.*

2.2.3.1.7 On the basis of the test procedures in accordance with 2.3.3.1 and 2.3.4, and the criteria set out in 2.2.3.1.1, it may also be determined whether the nature of a solution or a mixture mentioned by name or containing a substance mentioned by name is such that the solution or mixture is not subject to the provisions for this Class (see also 2.1.3).

2.2.3.2 ***Substances not accepted for carriage***

2.2.3.2.1 Substances of Class 3 which are liable to form peroxides easily (as happens with ethers or with certain heterocyclic oxygenated substances) shall not be accepted for carriage if their peroxide content, calculated as hydrogen peroxide (H_2O_2), exceeds 0.3%. The peroxide content shall be determined as indicated in 2.3.3.2.

2.2.3.2.2 The chemically unstable substances of Class 3 shall not be accepted for carriage unless the necessary steps have been taken to prevent their dangerous decomposition or polymerization during carriage. To this end, it shall be ensured in particular that receptacles and tanks do not contain any substance liable to promote these reactions.

2.2.3.2.3 Liquid desensitized explosives other than those listed in Table A of Chapter 3.2 shall not be accepted for carriage as substances of Class 3.

2.2.3.3 *List of collective entries*

Flammable liquids

Without subsidiary risk

F

F1

1133 ADHESIVES containing flammable liquid
1136 COAL TAR DISTILLATES, FLAMMABLE
1139 COATING SOLUTION (includes surface treatments or coatings used for industrial or other purposes such as vehicle undercoating, drum or barrel lining)
1169 EXTRACTS, AROMATIC, LIQUID
1197 EXTRACTS, FLAVOURING, LIQUID
1210 PRINTING INK, flammable or
1210 PRINTING INK RELATED MATERIAL (including printing ink thinning or reducing compound), flammable
1263 PAINT (including paint, lacquer, enamel, stain, shellac, varnish, polish, liquid filler and liquid lacquer base) or
1263 PAINT RELATED MATERIAL (including paint thinning or reducing compound)
1266 PERFUMERY PRODUCTS with flammable solvents
1293 TINCTURES, MEDICINAL
1306 WOOD PRESERVATIVES, LIQUID
1866 RESIN SOLUTION, flammable
1999 TARS, LIQUID, including road asphalt and oils, bitumen and cut backs
3065 ALCOHOLIC BEVERAGES
3269 POLYESTER RESIN KITS
1224 KETONES, LIQUID, N.O.S.
1268 PETROLEUM DISTILLATES, N.O.S. or
1268 PETROLEUM PRODUCTS, N.O.S.
1987 ALCOHOLS, N.O.S.
1989 ALDEHYDES, N.O.S.
2319 TERPENE HYDROCARBONS, N.O.S.
3271 ETHERS, N.O.S.
3272 ESTERS, N.O.S.
3295 HYDROCARBONS, LIQUID, N.O.S.
3336 MERCAPTANS, LIQUID, FLAMMABLE, N.O.S. or
3336 MERCAPTANS MIXTURE, LIQUID, FLAMMABLE, N.O.S.
1993 FLAMMABLE LIQUID, N.O.S.

F2
elevated temperature

3256 ELEVATED TEMPERATURE LIQUID, FLAMMABLE, N.O.S., with flash-point above 61 °C, at or above its flash-point

(cont'd)

2.2.3.3 *List of collective entries (cont'd)*

Toxic FT

FT1

1228 MERCAPTANS, LIQUID, FLAMMABLE, TOXIC, N.O.S. or
1228 MERCAPTAN MIXTURE, LIQUID, FLAMMABLE, TOXIC, N.O.S.
1986 ALCOHOLS, FLAMMABLE, TOXIC, N.O.S.
1988 ALDEHYDES, FLAMMABLE, TOXIC, N.O.S.
2478 ISOCYANATES, FLAMMABLE, TOXIC, N.O.S. or
2478 ISOCYANATE SOLUTION, FLAMMABLE, TOXIC, N.O.S.
3248 MEDICINE, LIQUID, FLAMMABLE, TOXIC, N.O.S.
3273 NITRILES, FLAMMABLE, TOXIC, N.O.S.
1992 FLAMMABLE LIQUID, TOXIC, N.O.S.

FT2
pesticide (f.p<23 °C)

2758 CARBAMATE PESTICIDE, LIQUID, FLAMMABLE, TOXIC
2760 ARSENICAL PESTICIDE, LIQUID, FLAMMABLE, TOXIC
2762 ORGANOCHLORINE PESTICIDE, LIQUID, FLAMMABLE, TOXIC
2764 TRIAZINE PESTICIDE, LIQUID, FLAMMABLE, TOXIC
2772 THIOCARBAMATE PESTICIDE, LIQUID, FLAMMABLE, TOXIC
2776 COPPER BASED PESTICIDE, LIQUID, FLAMMABLE, TOXIC
2778 MERCURY BASED PESTICIDE, LIQUID, FLAMMABLE, TOXIC
2780 SUBSTITUTED NITROPHENOL PESTICIDE, LIQUID, FLAMMABLE, TOXIC
2782 BIPYRIDILIUM PESTICIDE, LIQUID, FLAMMABLE, TOXIC
2784 ORGANOPHOSPHORUS PESTICIDE, LIQUID, FLAMMABLE, TOXIC
2787 ORGANOTIN PESTICIDE, LIQUID, FLAMMABLE, TOXIC
3024 COUMARIN DERIVATIVE PESTICIDE, LIQUID, FLAMMABLE, TOXIC
3346 PHENOXYACETIC ACID DERIVATIVE PESTICIDE, LIQUID, FLAMMABLE, TOXIC
3350 PYRETHROID PESTICIDE, LIQUID, FLAMMABLE TOXIC
3021 PESTICIDE, LIQUID, FLAMMABLE, TOXIC, N.O.S.

NOTE* : *The classification of a pesticide under an entry shall be effected on the basis of the active ingredient, of the physical state of the pesticide and any subsidiary risks it may exhibit.

Corrosive **FC**

2733 AMINES, FLAMMABLE, CORROSIVE, N.O.S. or
2733 POLYAMINES, FLAMMABLE, CORROSIVE, N.O.S.
2985 CHLOROSILANES, FLAMMABLE, CORROSIVE, N.O.S.
3274 ALCOHOLATES SOLUTION, N.O.S., in alcohol
2924 FLAMMABLE LIQUID, CORROSIVE, N.O.S.

Toxic, corrosive **FTC**

3286 FLAMMABLE LIQUID, TOXIC, CORROSIVE, N.O.S.

Liquid desensitised explosive **D**

3343 NITROGLYCERIN MIXTURE, DESENSITIZED, LIQUID, FLAMMABLE, N.O.S. with not more than 30% nitroglycerin by mass
3357 NITROGLYCERIN MIXTURE, DESENSITIZED, LIQUID, N.O.S. with not more than 30% nitroglycerin by mass
3379 DESENSITIZED EXPLOSIVE, LIQUID, N.O.S.

2.2.41 Class 4.1 Flammable solids, self-reactive substances and solid desensitized explosives

2.2.41.1 *Criteria*

2.2.41.1.1 The heading of Class 4.1 covers flammable substances and articles, desensitized explosives which are solids according to subparagraph (a) of the definition "solid" in 1.2.1 and self-reactive liquids or solids.

The following are assigned to Class 4.1:

- readily flammable solid substances and articles (see paragraphs 2.2.41.1.3 to 2.2.41.1.8);
- self-reactive solids or liquids (see paragraphs 2.2.41.1.9 to 2.2.41.1.17);
- solid desensitized explosives (see 2.2.41.1.18);
- substances related to self-reactive substances (see 2.2.41.1.19).

2.2.41.1.2 The substances and articles of Class 4.1 are subdivided as follows:

F Flammable solids, without subsidiary risk:

F1 Organic;
F2 Organic, molten;
F3 Inorganic;

FO Flammable solids, oxidizing;

FT Flammable solids, toxic:

FT1 Organic, toxic;
FT2 Inorganic, toxic;

FC Flammable solids, corrosive:

FC1 Organic, corrosive;
FC2 Inorganic, corrosive;

D Solid desensitized explosives without subsidiary risk;

DT Solid desensitized explosives, toxic;

SR Self-reactive substances:

SR1 Not requiring temperature control;
SR2 Requiring temperature control.

Flammable solids

Definition and properties

2.2.41.1.3 *Flammable solids* are readily combustible solids and solids which may cause fire through friction.

Readily combustible solids are powdered, granular, or pasty substances which are dangerous if they can be easily ignited by brief contact with an ignition source, such as a burning match, and if the flame spreads rapidly. The danger may come not only from the fire but also from toxic combustion products. Metal powders are especially dangerous because of the difficulty of extinguishing a fire since normal extinguishing agents such as carbon dioxide or water can increase the hazard.

Classification

2.2.41.1.4 Substances and articles classified as flammable solids of Class 4.1 are listed in Table A of Chapter 3.2. The assignment of organic substances and articles not mentioned by name in Table A of Chapter 3.2 to the relevant entry of sub-section 2.2.41.3 in accordance with the provisions of Chapter 2.1 can be based on experience or on the results of the test procedures in accordance with Part III, sub-section 33.2.1 of the Manual of Tests and Criteria. The assignment of inorganic substances not mentioned by name shall be based on the results of the test procedures in accordance with Part III, sub-section 33.2.1 of the Manual of Tests and Criteria; experience shall also be taken into account when it leads to a more stringent assignment.

2.2.41.1.5 When substances not mentioned by name are assigned to one of the entries listed in 2.2.41.3 on the basis of the test procedures in accordance with the Manual of Tests and Criteria, Part III, sub-section 33.2.1, the following criteria apply:

(a) With the exception of metal powders or powders of metal alloys, powdery, granular or pasty substances shall be classified as readily flammable substances of Class 4.1 if they can be easily ignited by brief contact with an ignition source (e.g. a burning match), or if, in the event of ignition, the flame spreads rapidly, the burning time is less than 45 seconds for a measured distance of 100 mm or the rate of burning is greater than 2.2 mm/s;

(b) Metal powders or powders of metal alloys shall be assigned to Class 4.1 if they can be ignited by a flame and the reaction spreads over the whole length of the sample in 10 minutes or less.

Solids which may cause fire through friction shall be classified in Class 4.1 by analogy with existing entries (e.g. matches) or in accordance with any appropriate special provision.

2.2.41.1.6 On the basis of the test procedure in accordance with the Manual of Tests and Criteria, Part III, Section 33.2.1 and the criteria set out in 2.2.41.1.4 and 2.2.41.1.5, it may also be determined whether the nature of a substance mentioned by name is such that the substance is not subject to the provisions for this Class.

2.2.41.1.7 If substances of Class 4.1, as a result of admixtures, come into different categories of risk from those to which the substances mentioned by name in Table A of Chapter 3.2 belong, these mixtures shall be assigned to the entries to which they belong on the basis of their actual degree of danger.

NOTE: *For the classification of solutions and mixtures (such as preparations and wastes), see also 2.1.3.*

Assignment of packing groups

2.2.41.1.8 Flammable solids classified under the various entries in Table A of Chapter 3.2 shall be assigned to packing groups II or III on the basis of test procedures of the Manual of Tests and Criteria, Part III, sub-section 33.2.1, in accordance with the following criteria:

(a) Readily flammable solids which, when tested, have a burning time of less than 45 seconds over a measured distance of 100 mm shall be assigned to:

Packing group II: if the flame passes the wetted zone;

Packing group III: if the wetted zone stops the flame for at least four minutes;

(b) Metal powders or powders of metal alloys shall be assigned to:

Packing group II: if, when tested, the reaction spreads over the whole length of the sample in five minutes or less;

Packing group III: if, when tested, the reaction spreads over the whole length of the sample in more than five minutes.

For solids which may cause fire through friction, the packing group shall be assigned by analogy with existing entries or in accordance with any special provision.

Self-reactive substances

Definitions

2.2.41.1.9 For the purposes of ADR, *self-reactive substances* are thermally unstable substances liable to undergo a strongly exothermic decomposition even without participation of oxygen (air). Substances are not considered to be self-reactive substances of Class 4.1, if:

(a) they are explosives according to the criteria of Class 1;

(b) they are oxidizing substances according to the assignment procedure of Class 5.1 (see 2.2.51.1);

(c) they are organic peroxides according to the criteria of Class 5.2 (see 2.2.52.1);

(d) their heat of decomposition is less than 300 J/g; or

(e) their self-accelerating decomposition temperature (SADT) (see NOTE 2 below) is greater than 75 °C for a 50 kg package.

NOTE 1: *The heat of decomposition can be determined using any internationally recognised method e.g. differential scanning calorimetry and adiabatic calorimetry.*

NOTE 2*: The self-accelerating decomposition temperature (SADT) is the lowest temperature at which self-accelerating decomposition may occur with a substance in the packaging as used during carriage. Requirements for the determination of the SADT are given in the Manual of Tests and Criteria, Part II, Chapter 20 and section 28.4.*

NOTE 3*: Any substance which shows the properties of a self-reactive substance shall be classified as such, even if this substance gives a positive test result according to 2.2.42.1.5 for inclusion in Class 4.2.*

Properties

2.2.41.1.10 The decomposition of self-reactive substances can be initiated by heat, contact with catalytic impurities (e.g. acids, heavy-metal compounds, bases), friction or impact. The rate of decomposition increases with temperature and varies with the substance. Decomposition, particularly if no ignition occurs, may result in the evolution of toxic gases or vapours. For certain self-reactive substances, the temperature shall be controlled. Some self-reactive substances may decompose explosively, particularly if confined. This characteristic may be modified by the addition of diluents or by the use of appropriate packagings. Certain self-reactive substances burn vigorously. Self-reactive substances are, for example, some compounds of the types listed below:

aliphatic azo compounds (-C-N=N-C-);
organic azides ($-C-N_3$);
diazonium salts ($-CN_2^+ Z^-$);
N-nitroso compounds (-N-N=O); and
aromatic sulphohydrazides ($-SO_2-NH-NH_2$).

This list is not exhaustive and substances with other reactive groups and some mixtures of substances may have similar properties.

Classification

2.2.41.1.11 Self-reactive substances are classified into seven types according to the degree of danger they present. The types of self-reactive substances range from type A, which is not accepted for carriage in the packaging in which it is tested, to type G, which is not subject to the provisions for self-reactive substances of Class 4.1. The classification of types B to F is directly related to the maximum quantity allowed in one packaging. The principles to be applied for classification as well as the applicable classification procedures, test methods and criteria and an example of a suitable test report are given in Part II of the Manual of Tests and Criteria.

2.2.41.1.12 Self-reactive substances which have already been classified and are already permitted for carriage in packagings are listed in 2.2.41.4, those already permitted for carriage in IBCs are listed in 4.1.4.2, packing instruction IBC520 and those already permitted for carriage in tanks according to Chapter 4.2 are listed in 4.2.5.2, portable tank instruction T23. Each permitted substance listed is assigned to a generic entry of Table A of Chapter 3.2 (UN Nos. 3221 to 3240), and appropriate subsidiary risks and remarks providing relevant transport information are given.

The collective entries specify:

- self-reactive substances types B to F, see 2.2.41.1.11 above;

- physical state (liquid/solid); and

- temperature control (when required), see 2.2.41.1.17 below.

The classification of the self-reactive substances listed in 2.2.41.4 is based on the technically pure substance (except where a concentration of less than 100% is specified).

2.2.41.1.13 Classification of self-reactive substances not listed in 2.2.41.4, 4.1.4.2, packing instruction IBC520 or 4.2.5.2, portable tank instruction T23 and assignment to a collective entry shall be made by the competent authority of the country of origin on the basis of a test report. The statement of approval shall contain the classification and the relevant conditions of carriage. If the country of origin is not a Contracting Party to ADR, the classification and the

conditions of carriage shall be recognized by the competent authority of the first country Contracting Party to ADR reached by the consignment.

2.2.41.1.14 Activators, such as zinc compounds, may be added to some self-reactive substances to change their reactivity. Depending on both the type and the concentration of the activator, this may result in a decrease in thermal stability and a change in explosive properties. If either of these properties is altered, the new formulation shall be assessed in accordance with the classification procedure.

2.2.41.1.15 Samples of self-reactive substances or formulations of self-reactive substances not listed in 2.2.41.4, for which a complete set of test results is not available and which are to be carried for further testing or evaluation, shall be assigned to one of the appropriate entries for self-reactive substances type C provided the following conditions are met:

- the available data indicates that the sample would be no more dangerous than self-reactive substances type B;

- the sample is packaged in accordance with packing method OP2 and the quantity per transport unit is limited to 10 kg;

- the available data indicate that the control temperature, if any, is sufficiently low to prevent any dangerous decomposition and sufficiently high to prevent any dangerous phase separation.

Desensitization

2.2.41.1.16 In order to ensure safety during carriage, self-reactive substances are in many cases desensitized by use of a diluent. Where a percentage of a substance is stipulated, this refers to the percentage by mass, rounded to the nearest whole number. If a diluent is used, the self-reactive substance shall be tested with the diluent present in the concentration and form used in carriage. Diluents which may allow a self-reactive substance to concentrate to a dangerous extent in the event of leakage from a packaging shall not be used. Any diluent shall be compatible with the self-reactive substance. In this regard, compatible diluents are those solids or liquids which have no detrimental influence on the thermal stability and hazard type of the self-reactive substance. Liquid diluents in formulations requiring temperature control (see 2.2.41.1.14) shall have a boiling point of at least 60 °C and a flash-point not less than 5 °C. The boiling point of the liquid shall be at least 50 °C higher than the control temperature of the self-reactive substance.

Temperature control requirements

2.2.41.1.17 Certain self-reactive substances may only be carried under temperature controlled conditions. The control temperature is the maximum temperature at which the self-reactive substance can be safely carried. It is assumed that the temperature of the immediate surroundings of a package only exceeds 55 °C during carriage for a relatively short time in a 24 hour period. In the event of loss of temperature control, it may be necessary to implement emergency procedures. The emergency temperature is the temperature at which such procedures shall be implemented. The control and emergency temperatures are derived from the SADT (see table 1). The SADT shall be determined in order to decide whether a substance shall be subjected to temperature control during carriage. Provisions for the determination of the SADT are given in the Manual of Tests and Criteria, Part II, Chapter 20 and Section 28.4.

Table 1: Derivation of control and emergency temperatures

Type of receptacle	SADT [a]	Control temperature	Emergency temperature
Single packagings and IBCs	20 °C or less	20 °C below SADT	10 °C below SADT
	over 20 °C to 35 °C	15 °C below SADT	10 °C below SADT
	over 35 °C	10 °C below SADT	5 °C below SADT
Tanks	not greater than 50 °C	10 °C below SADT	5 °C below SADT

[a] *SADT of the substance as packaged for carriage.*

Self-reactive substances with an SADT not greater than 55 °C shall be subject to temperature control during carriage. Where applicable, control and emergency temperatures are listed in 2.2.41.4. The actual temperature during carriage may be lower than the control temperature but shall be selected so as to avoid dangerous separation of phases.

Solid desensitized explosives

2.2.41.1.18 Solid desensitized explosives are substances which are wetted with water or alcohols or are diluted with other substances to suppress their explosive properties. Such entries in Table A of Chapter 3.2 are: UN Nos. 1310, 1320, 1321, 1322, 1336, 1337, 1344, 1347, 1348, 1349, 1354, 1355, 1356, 1357, 1517, 1571, 2555, 2556, 2557, 2852, 2907, 3317, 3319, 3344, 3364, 3365, 3366, 3367, 3368, 3369, 3370, 3376 and 3380.

Substances related to self-reactive substances

2.2.41.1.19 Substances that:

(a) have been provisionally accepted into Class 1 according to Test Series 1 and 2 but exempted from Class 1 by Test Series 6;

(b) are not self-reactive substances of Class 4.1; and

(c) are not substances of Classes 5.1 or 5.2;

are also assigned to Class 4.1. UN Nos. 2956, 3241, 3242 and 3251 are such entries.

2.2.41.2 ***Substances not accepted for carriage***

2.2.41.2.1 The chemically unstable substances of Class 4.1 shall not be accepted for carriage unless the necessary steps have been taken to prevent their dangerous decomposition or polymerization during carriage. To this end, it shall in particular be ensured that receptacles and tanks do not contain any substance liable to promote these reactions.

2.2.41.2.2 Flammable solids, oxidizing, assigned to UN No. 3097 shall not be accepted for carriage unless they meet the requirements for Class 1 (see also 2.1.3.7).

2.2.41.2.3 The following substances shall not be accepted for carriage:

- Self-reactive substances of type A (see Manual of Tests and Criteria, Part II, paragraph 20.4.2 (a));

- Phosphorus sulphides which are not free from yellow and white phosphorus;

- Solid densitized explosives other than those listed in Table A of Chapter 3.2;
- Inorganic flammable substances in the molten form other than UN No. 2448 SULPHUR, MOLTEN.

2.2.41.3 *List of collective entries*

Flammable solids	without subsidiary risk	organic	F1	3175 SOLIDS CONTAINING FLAMMABLE LIQUID, N.O.S. 1353 FIBRES IMPREGNATED WITH WEAKLY NITRATED NITROCELLULOSE, N.O.S. or 1353 FABRICS IMPREGNATED WITH WEAKLY NITRATED NITROCELLULOSE, N.O.S. 1325 FLAMMABLE SOLID, ORGANIC, N.O.S.
		organic molten	F2	3176 FLAMMABLE SOLID, ORGANIC, MOLTEN, N.O.S.
		inorganic	F3	3089 METAL POWDER, FLAMMABLE, N.O.S. [a] [b] 3181 METAL SALTS OF ORGANIC COMPOUNDS, FLAMMABLE, N.O.S. 3182 METAL HYDRIDES, FLAMMABLE,N.O.S. [c] 3178 FLAMMABLE SOLID, INORGANIC, N.O.S.
	oxidizing		FO	3097 FLAMMABLE SOLID, OXIDIZING, N.O.S. (not allowed, see para. 2.2.41.2.2)
Solid desen-sitized explosives	toxic FT	organic	FT1	2926 FLAMMABLE SOLID, TOXIC, ORGANIC, N.O.S.
		inorganic	FT2	3179 FLAMMABLE SOLID, TOXIC, INORGANIC, N.O.S.
	corrosive FC	organic	FC1	2925 FLAMMABLE SOLID, CORROSIVE, ORGANIC, N.O.S.
		inorganic	FC2	3180 FLAMMABLE SOLID, CORROSIVE, INORGANIC, N.O.S.
	without subsidiary risk		D	3319 NITROGLYCERIN MIXTURE, DESENSITIZED, SOLID, N.O.S. with more than 2% but not more than 10% nitroglycerin by mass 3344 PENTAERYTHRITE TETRANITRATE MIXTURE, DESENSITIZED, SOLID, N.O.S. with more than 10% but not more than 20% PETN by mass 3380 DESENSITIZED EXPLOSIVE, SOLID, N.O.S.
	toxic		DT	Table A of Chapter 3.2 are to be accepted for carriage as substances of Class 4.1
Self-reactive substances SR	not requiring temperature control		SR1	SELF-REACTIVE LIQUID TYPE A } Not accepted for carriage, see 2.2.41.2.3 SELF-REACTIVE SOLID TYPE A } 3221 SELF-REACTIVE LIQUID TYPE B 3222 SELF-REACTIVE SOLID TYPE B 3223 SELF-REACTIVE LIQUID TYPE C 3224 SELF-REACTIVE SOLID TYPE C 3225 SELF-REACTIVE LIQUID TYPE D 3226 SELF-REACTIVE SOLID TYPE D 3227 SELF-REACTIVE LIQUID TYPE E 3228 SELF-REACTIVE SOLID TYPE E 3229 SELF-REACTIVE LIQUID TYPE F 3230 SELF-REACTIVE SOLID TYPE F SELF-REACTIVE LIQUID TYPE G } Not subject to the provisions applicable to Class 4.1, see 2.2.41.1.1.11 SELF-REACTIVE SOLID TYPE G }
	requiring temperature control		SR2	3231 SELF-REACTIVE LIQUID TYPE B, TEMPERATURE CONTROLLED 3232 SELF-REACTIVE SOLID TYPE B, TEMPERATURE CONTROLLED 3233 SELF-REACTIVE LIQUID TYPE C, TEMPERATURE CONTROLLED 3234 SELF-REACTIVE SOLID TYPE C, TEMPERATURE CONTROLLED 3235 SELF-REACTIVE LIQUID TYPE D, TEMPERATURE CONTROLLED 3236 SELF-REACTIVE SOLID TYPE D, TEMPERATURE CONTROLLED 3237 SELF-REACTIVE LIQUID TYPE E, TEMPERATURE CONTROLLED 3238 SELF-REACTIVE SOLID TYPE E, TEMPERATURE CONTROLLED 3239 SELF-REACTIVE LIQUID TYPE F, TEMPERATURE CONTROLLED 3240 SELF-REACTIVE SOLID TYPE F, TEMPERATURE CONTROLLED

[a] *Metals and metal alloys in powdered or other flammable form, liable to spontaneous combustion, are substances of Class 4.2.*

[b] *Metals and metal alloys in powdered or other flammable form, which in contact with water, emit flammable gases, are substances of Class 4.3.*

[c] *Metals hydrides which, in contact with water, emit flammable gases, are substances of Class 4.3. Aluminium borohydride or aluminium borohydride in devices are substances of Class 4.2, UN No. 2870.*

2.2.41.4 *List of currently assigned self-reactive substances in packagings*

In the column "Packing Method" codes "OP1" to "OP8" refer to packing methods in 4.1.4.1, packing instruction P520 (see also 4.1.7.1). Self-reactive substances to be carried shall fulfil the classification and the control and emergency temperatures (derived from the SADT) as listed. For substances permitted in IBCs, see 4.1.4.2, packing instruction IBC520 and, for those permitted in tanks according to Chapter 4.2, see 4.2.5.2, portable tank instruction T23.

NOTE: *The classification given in this table is based on the technically pure substance (except where a concentration of less than 100 % is specified). For other concentrations, the substance may be classified differently following the procedures given in Part II of the Manual of Tests and Criteria and in 2.2.41.1.17.*

SELF-REACTIVE SUBSTANCE	Concen-tration (%)	Packing method	Control tempera-ture (°C)	Emergency tempera-ture (°C)	UN generic entry	Remarks
AZODICARBONAMIDE FORMULATION TYPE B, TEMPERATURE CONTROLLED	< 100	OP5			3232	(1) (2)
AZODICARBONAMIDE FORMULATION TYPE C	< 100	OP6			3224	(3)
AZODICARBONAMIDE FORMULATION TYPE C, TEMPERATURE CONTROLLED	< 100	OP6			3234	(4)
AZODICARBONAMIDE FORMULATION TYPE D	< 100	OP7			3226	(5)
AZODICARBONAMIDE FORMULATION TYPE D, TEMPERATURE CONTROLLED	< 100	OP7			3236	(6)
2,2' -AZODI(2,4-DIMETHYL- 4-METHOXY-VALERONITRILE)	100	OP7	-5	+5	3236	
2,2' -AZODI(2,4-DIMETHYL- VALERONITRILE)	100	OP7	+10	+15	3236	
2,2' -AZODI(ETHYL- 2-METHYL-PROPIONATE)	100	OP7	+20	+25	3235	
1,1-AZODI(HEXAHYDROBENZONITRILE)	100	OP7			3226	
2,2' -AZODI(ISOBUTYRONITRILE	100	OP6	+40	+45	3234	
2,2' -AZODI(ISOBUTYRONITRILE) as a water based paste	≤ 50%	OP6			3224	
2,2' -AZODI(2-METHYLBUTYRONITRILE)	100	OP7	+35	+40	3236	
BENZENE-1,3-DISULPHONYL HYDRAZIDE, as a paste	52	OP7			3226	
BENZENE SULPHONYL HYDRAZIDE	100	OP7			3226	
4-(BENZYL(ETHYL)AMINO)-3-ETHOXY-BENZENEDIAZONIUM ZINC CHLORIDE	100	OP7			3226	
4-(BENZYL(METHYL)AMINO)-3-ETHOXY-BENZENEDIAZONIUM ZINC CHLORIDE	100	OP7	+40	+45	3236	
3-CHLORO-4-DIETHYLAMINOBENZENE-DIAZONIUM ZINC CHLORIDE	100	OP7			3226	
2-DIAZO-1-NAPHTHOL-4-SULPHONYL CHLORIDE	100	OP5			3222	(2)
2-DIAZO-1-NAPHTHOL-5-SULPHONYL CHLORIDE	100	OP5			3222	(2)
2-DIAZO-1-NAPHTHOL SULPHONIC ACID ESTER MIXTURE, TYPE D	< 100	OP7			3226	(9)
2,5-DIBUTOXY-4-(4-MORPHOLINYL)-BENZENEDIAZONIUM, TETRACHLOROZINCATE (2:1)	100	OP8			3228	
2,5-DIETHOXY-4-MORPHOLINO-BENZENEDIAZONIUM ZINC CHLORIDE	67-100	OP7	+35	+40	3236	
2,5-DIETHOXY-4-MORPHOLINO-BENZENEDIAZONIUM ZINC CHLORIDE	66	OP7	+40	+45	3236	
2,5-DIETHOXY-4-MORPHOLINO-BENZENEDIAZONIUM TETRAFLUOROBORATE	100	OP7	+30	+35	3236	

SELF-REACTIVE SUBSTANCE	Concen-tration (%)	Packing method	Control tempera-ture (°C)	Emergency tempera-ture (°C)	UN generic entry	Remarks
2,5-DIETHOXY-4-(4-MORPHOLINYL)-BENZENEDIAZONIUM SULPHATE	100	OP7			3226	
2,5-DIETHOXY-4-(PHENYLSULPHONYL)-BENZENEDIAZONIUM ZINC CHLORIDE	67	OP7	+40	+45	3236	
DIETHYLENEGLYCOL BIS (ALLYL CARBONATE) + DI- ISOPROPYL-PEROXYDICARBONATE	≥ 88+≤ 12	OP8	-10	0	3237	
2,5-DIMETHOXY-4-(4-METHYL-PHENYLSULPHONYL)BENZENE- DIAZONIUM ZINC CHLORIDE	79	OP7	+40	+45	3236	
4-(DIMETHYLAMINO)-BENZENE-DIAZONIUM TRICHLOROZINCATE (-1)	100	OP8			3228	
4-DIMETHYLAMINO-6-(2-DIMETHYL-AMINOETHOXY) TOLUENE- 2-DIAZONIUM ZINC CHLORIDE	100	OP7	+40	+45	3236	
N,N'-DINITROSO-N,N'- DIMETHYL TEREPHTHALAMIDE, as a paste	72	OP6			3224	
N,N'-DINITROSOPENTAMETHYLENE-TETRAMINE	82	OP6			3224	(7)
DIPHENYLOXIDE-4,4'-DISULPHONYL HYDRAZIDE	100	OP7			3226	
4-DIPROPYLAMINOBENZENE- DIAZONIUM ZINC CHLORIDE	100	OP7			3226	
2-(N,N-ETHOXYCARBONYL-PHENYLAMINO)-3-METHOXY-4-(N-METHYL-N-CYCLOHEXYLAMINO) BENZENEDIAZONIUM ZINC CHLORIDE	63-92	OP7	+ 40	+ 45	3236	
2-(N,N-ETHOXYCARBONYL-PHENYLAMINO)-3-METHOXY-4-(N-METHYL-N-CYCLOHEXYLAMINO) BENZENEDIAZONIUM ZINC CHLORIDE	62	OP7	+ 35	+ 40	3236	
N-FORMYL-2-(NITROMETHYLENE) -1,3-PERHYDROTHIAZINE	100	OP7	+45	+50	3236	
2-(2-HYDROXYETHOXY)-1-(PYRROLIDIN-1-YL)BENZENE-4- DIAZONIUM ZINC CHLORIDE	100	OP7	+ 45	+ 50	3236	
3-(2-HYDROXYETHOXY)-4- (PYRROLIDIN-1-YL) BENZENE DIAZONIUM ZINC CHLORIDE	100	OP7	+40	+45	3236	
2-(N,N-METHYLAMINOETHYLCARBONYL)-4-(3,4-DIMETHYLPHENYLSULPHONYL) BENZENEDIAZONIUM HYDROGEN SULPHATE	96	OP7	+45	+50	3236	
4-METHYLBENZENESULPHONYLHYDRAZIDE	100	OP7			3226	
3-METHYL-4-(PYRROLIDIN-1-YL) BENZENEDIAZONIUM TETRAFLUOROBORATE	95	OP6	+45	+50	3234	
4-NITROSOPHENOL	100	OP7	+35	+40	3236	
SELF-REACTIVE LIQUID, SAMPLE		OP2			3223	(8)
SELF-REACTIVE LIQUID, SAMPLE, TEMPERATURE CONTROLLED		OP2			3233	(8)
SELF-REACTIVE SOLID, SAMPLE		OP2			3224	(8)
SELF-REACTIVE SOLID, SAMPLE, TEMPERATURE CONTROLLED		OP2			3234	(8)
SODIUM 2-DIAZO-1-NAPHTHOL- 4-SULPHONATE	100	OP7			3226	
SODIUM 2-DIAZO-1-NAPHTHOL- 5-SULPHONATE	100	OP7			3226	
TETRAMINE PALLADIUM (II) NITRATE	100	OP6	+30	+35	3234	

Remarks

(1) Azodicarbonamide formulations which fulfil the criteria of paragraph 20.4.2 (b) of the Manual of Tests and Criteria. The control and emergency temperatures shall be determined by the procedure given in 2.2.41.1.17.

(2) "EXPLOSIVE" subsidiary risk label required (Model No. 1, see 5.2.2.2.2).

(3) Azodicarbonamide formulations which fulfil the criteria of paragraph 20.4.2 (c) of the Manual of Tests and Criteria.

(4) Azodicarbonamide formulations which fulfil the criteria of paragraph 20.4.2 (c) of the Manual of Tests and Criteria. The control and emergency temperatures shall be determined by the procedure given in 2.2.41.1.17.

(5) Azodicarbonamide formulations which fulfil the criteria of paragraph 20.4.2 (d) of the Manual of Tests and Criteria.

(6) Azodicarbonamide formulations which fulfil the criteria of paragraph 20.4.2 (d) of the Manual of Tests and Criteria. The control and emergency temperatures shall be determined by the procedure given in 2.2.41.1.17.

(7) With a compatible diluent having a boiling point of not less than 150 °C.

(8) See 2.2.41.1.15.

(9) This entry applies to mixtures of esters of 2-diazo-1-naphthol-4-sulphonic acid and 2-diazo-1-naphthol-5-sulphonic acid which fulfil the criteria of paragraph 20.4.2 (d) of the *Manual of Test and Criteria*.

2.2.42 Class 4.2 Substances liable to spontaneous combustion

2.2.42.1 *Criteria*

2.2.42.1.1 The heading of Class 4.2 covers:

- *Pyrophoric substances* which are substances, including mixtures and solutions (liquid or solid), which even in small quantities ignite on contact with air within five minutes. These are the Class 4.2 substances the most liable to spontaneous combustion; and

- *Self-heating substances and articles* which are substances and articles, including mixtures and solutions, which, on contact with air, without energy supply, are liable to self-heating. These substances will ignite only in large amounts (kilogrammes) and after long periods of time (hours or days).

2.2.42.1.2 The substances and articles of Class 4.2 are subdivided as follows:

S Substances liable to spontaneous combustion, without subsidiary risk:

S1 Organic, liquid;
S2 Organic, solid;
S3 Inorganic, liquid;
S4 Inorganic, solid;
S5 Organometallic;

SW Substances liable to spontaneous combustion, which, in contact with water, emit flammable gases;

SO Substances liable to spontaneous combustion, oxidizing;

ST Substances liable to spontaneous combustion, toxic:

ST1 Organic, toxic, liquid;
ST2 Organic, toxic, solid;
ST3 Inorganic, toxic, liquid;
ST4 Inorganic, toxic, solid;

SC Substances liable to spontaneous combustion, corrosive:

SC1 Organic, corrosive, liquid;
SC2 Organic, corrosive, solid;
SC3 Inorganic, corrosive, liquid;
SC4 Inorganic, corrosive, solid.

Properties

2.2.42.1.3 Self-heating of these substances, leading to spontaneous combustion, is caused by reaction of the substance with oxygen (in the air) and the heat developed not being conducted away rapidly enough to the surroundings. Spontaneous combustion occurs when the rate of heat production exceeds the rate of heat loss and the auto-ignition temperature is reached.

Classification

2.2.42.1.4 Substances and articles classified in Class 4.2 are listed in Table A of Chapter 3.2. The assignment of substances and articles not mentioned by name in Table A of Chapter 3.2 to the relevant specific N.O.S. entry of 2.2.42.3 in accordance with the provisions of Chapter 2.1 can be based on experience or the results of the test procedures in accordance with the Manual of Tests and Criteria, Part III, Section 33.3. Assignment to general N.O.S. entries of Class 4.2 shall be based on the results of the test procedures in accordance with the Manual of Tests and Criteria, Part III, section 33.3; experience shall also be taken into account when it leads to a more stringent assignment.

2.2.42.1.5 When substances or articles not mentioned by name are assigned to one of the entries listed in 2.2.42.3 on the basis of the test procedures in accordance with the Manual of Tests and Criteria, Part III, section 33.3, the following criteria shall apply:

(a) Solids liable to spontaneous combustion (pyrophoric) shall be assigned to Class 4.2 when they ignite on falling from a height of 1 m or within five minutes;

(b) Liquids liable to spontaneous combustion (pyrophoric) shall be assigned to Class 4.2 when:

(i) on being poured on an inert carrier, they ignite within five minutes, or

(ii) in the event of a negative result of the test according to (i), when poured on a dry, indented filter paper (Whatman No. 3 filter), they ignite or carbonize it within five minutes;

(c) Substances in which, in a 10 cm sample cube, at 140 °C test temperature, spontaneous combustion or a rise in temperature to over 200 °C is observed within 24 hours shall be assigned to Class 4.2. This criterion is based on the temperature of the spontaneous combustion of charcoal, which is at 50 °C for a sample cube of 27 m^3. Substances with a temperature of spontaneous combustion higher than 50 °C for a volume of 27 m^3 are not to be assigned to Class 4.2.

***NOTE 1**: Substances carried in packages with a volume of not more than 3 m^3 are exempted from Class 4.2 if, tested with a 10 cm sample cube at 120 °C, no spontaneous combustion nor a rise in temperature to over 180 °C is observed within 24 hours.*

***NOTE 2:** Substances carried in packages with a volume of not more than 450 litres are exempted from Class 4.2 if, tested with a 10 cm sample cube at 100 °C, no spontaneous combustion nor a rise in temperature to over 160 °C is observed within 24 hours.*

***NOTE 3:** Since organometallic substances can be classified in Class 4.2 or 4.3 with additional subsidiary risks, depending on their properties, a specific classification flow chart for these substances is given in 2.3.6.*

2.2.42.1.6 If substances of Class 4.2, as a result of admixtures, come into different categories of risk from those to which the substances mentioned by name in Table A of Chapter 3.2 belong, these mixtures shall be assigned to the entries to which they belong on the basis of their actual degree of danger.

***NOTE**: For the classification of solutions and mixtures (such as preparations and wastes), see also 2.1.3.*

2.2.42.1.7 On the basis of the test procedure in the Manual of Tests and Criteria, Part III, section 33.3 and the criteria set out in 2.2.42.1.5, it may also be determined whether the nature of a substance mentioned by name is such that the substance is not subject to the provisions for this Class.

Assignment of packing groups

2.2.42.1.8 Substances and articles classified under the various entries in Table A of Chapter 3.2 shall be assigned to packing groups I, II or III on the basis of test procedures of the Manual of Tests and Criteria, Part III, section 33.3, in accordance with the following criteria:

(a) Substances liable to spontaneous combustion (pyrophoric) shall be assigned to packing group I;

(b) Self-heating substances and articles in which, in a 2.5 cm sample cube, at 140 °C test temperature, spontaneous combustion or a rise in temperature to over 200 °C is observed within 24 hours, shall be assigned to packing group II;

Substances with a temperature of spontaneous combustion higher than 50 °C for a volume of 450 litres are not to be assigned to packing group II;

(c) Slightly self-heating substances in which, in a 2.5 cm sample cube, the phenomena referred to under (b) are not observed, in the given conditions, but in which in a 10 cm sample cube at 140 °C test temperature spontaneous combustion or a rise in temperature to over 200 °C is observed within 24 hours, shall be assigned to packing group III.

2.2.42.2 ***Substances not accepted for carriage***

The following substances shall not be accepted for carriage:

- UN No. 3255 tert-BUTYL HYPOCHLORITE; and

- Self-heating solids, oxidizing, assigned to UN No. 3127 unless they meet the requirements for Class 1 (see 2.1.3.7).

2.2.42.3 *List of collective entries*

Substances liable to spontaneous combustion		**liquid**	**S1**	2845	PYROPHORIC LIQUID, ORGANIC, N.O.S.
				3183	SELF-HEATING LIQUID, ORGANIC, N.O.S.
	organic				
		solid	**S2**	1373	FIBRES or FABRICS, ANIMAL or VEGETABLE or SYNTHETIC, N.O.S. with oil
				2006	PLASTICS, NITROCELLULOSE-BASED, SELF-HEATING, N.O.S.
				3313	ORGANIC PIGMENTS, SELF HEATING
Without subsidiary risk				2846	PYROPHORIC SOLID, ORGANIC, N.O.S.
S				3088	SELF-HEATING SOLID, ORGANIC, N.O.S.
		liquid	**S3**	3194	PYROPHORIC LIQUID, INORGANIC, N.O.S.
				3186	SELF-HEATING LIQUID, INORGANIC, N.O.S.
	inorganic				
		solid	**S4**	1383	PYROPHORIC METAL, N.O.S. or
				1383	PYROPHORIC ALLOY, N.O.S.
				1378	METAL CATALYST, WETTED with a visible excess of liquid
				2881	METAL CATALYST, DRY
				3189[a]	METAL POWDER, SELF-HEATING, N.O.S.
				3205	ALKALINE EARTH METAL ALCOHOLATES, N.O.S.
				3200	PYROPHORIC SOLID, INORGANIC, N.O.S.
				3190	SELF-HEATING SOLID, INORGANIC, N.O.S.
	organometallic		**S5**	3392	ORGANOMETALLIC SUBSTANCE, LIQUID, PYROPHORIC
				3391	ORGANOMETALLIC SUBSTANCE, SOLID, PYROPHORIC
				3400	ORGANOMETALLIC SUBSTANCE, SOLID, SELF-HEATING
Water-reactive			**SW**	2445	LITHIUM ALKYLS, LIQUID
				3433	LITHIUM ALKYLS, SOLID
				3051	ALUMINIUM ALKYLS
				3052	ALUMINIUM ALKYL HALIDES, LIQUID
				3461	ALUMINIUM ALKYL HALIDES, SOLID
				3053	MAGNESIUM ALKYLS
				3076	ALUMINIUM ALKYL HYDRIDES
				3394	ORGANOMETALLIC SUBSTANCE, LIQUID, PYROPHORIC, WATER-REACTIVE
				3393	ORGANOMETALLIC SUBSTANCE, SOLID, PYROPHORIC, WATER-REACTIVE
Oxidizing			**SO**	3127	SELF-HEATING SOLID, OXIDIZING, N.O.S. (not allowed, see 2.2.42.2)
		liquid	**ST1**	3184	SELF-HEATING LIQUID, TOXIC, ORGANIC, N.O.S.
	organic				
Toxic		**solid**	**ST2**	3128	SELF-HEATING SOLID, TOXIC, ORGANIC, N.O.S.
ST					
		liquid	**ST3**	3187	SELF-HEATING LIQUID, TOXIC, INORGANIC, N.O.S.
	inorganic				
		solid	**ST4**	3191	SELF-HEATING SOLID, TOXIC, INORGANIC, N.O.S.
		liquid	**SC1**	3185	SELF-HEATING LIQUID, CORROSIVE, ORGANIC, N.O.S.
	organic				
		solid	**SC2**	3126	SELF-HEATING SOLID, CORROSIVE, ORGANIC, N.O.S.
Corrosive					
SC		**liquid**	**SC3**	3188	SELF-HEATING LIQUID, CORROSIVE, INORGANIC, N.O.S.
	inorganic				
		solid	**SC4**	3206	ALKALI METAL ALCOHOLATES, SELF-HEATING, CORROSIVE, N.O.S.
				3192	SELF-HEATING SOLID, CORROSIVE, INORGANIC, N.O.S.

[a] *Dust and powder of metals, non toxic in a non-spontaneous combustible form which nevertheless, in contact with water, emit flammable gases, are substances of Class 4.3.*

2.2.43 Class 4.3 Substances which, in contact with water, emit flammable gases

2.2.43.1 *Criteria*

2.2.43.1.1 The heading of Class 4.3 covers substances which react with water to emit flammable gases liable to form explosive mixtures with air, and articles containing such substances.

2.2.43.1.2 Substances and articles of Class 4.3 are subdivided as follows:

W Substances which, in contact with water, emit flammable gases, without subsidiary risk, and articles containing such substances:

W1 Liquid;
W2 Solid;
W3 Articles;

WF1 Substances which, in contact with water, emit flammable gases, liquid, flammable;

WF2 Substances which, in contact with water, emit flammable gases, solid, flammable;

WS Substances which, in contact with water, emit flammable gases, solid, self-heating;

WO Substances which, in contact with water, emit flammable gases, oxidizing, solid;

WT Substances which, in contact with water, emit flammable gases, toxic:

WT1 Liquid;
WT2 Solid;

WC Substances which, in contact with water, emit flammable gases, corrosive:

WC1 Liquid;
WC2 Solid;

WFC Substances which, in contact with water, emit flammable gases, flammable, corrosive.

Properties

2.2.43.1.3 Certain substances in contact with water may emit flammable gases that can form explosive mixtures with air. Such mixtures are easily ignited by all ordinary sources of ignition, for example naked lights, sparking handtools or unprotected light bulbs. The resulting blast wave and flames may endanger people and the environment. The test method referred to in 2.2.43.1.4 below is used to determine whether the reaction of a substance with water leads to the development of a dangerous amount of gases which may be flammable. This test method shall not be applied to pyrophoric substances.

Classification

2.2.43.1.4 Substances and articles classified in Class 4.3 are listed in Table A of Chapter 3.2. The assignment of substances and articles not mentioned by name in Table A of Chapter 3.2 to the relevant entry of 2.2.43.3 in accordance with the provisions of Chapter 2.1 shall be based on the results of the test procedure in accordance with the Manual of Tests and Criteria, Part III, Section 33.4; experience shall also be taken into account when it leads to a more stringent assignment.

2.2.43.1.5 When substances not mentioned by name are assigned to one of the entries listed in 2.2.43.3 on the basis of the test procedure in accordance with the Manual of Tests and Criteria, Part III, Section 33.4, the following criteria shall apply:

A substance shall be assigned to Class 4.3 if:

(a) spontaneous ignition of the gas emitted takes place in any step of the test procedure; or

(b) there is an evolution of flammable gas at a rate greater than 1 litre per kilogramme of the substance to be tested per hour.

NOTE: *Since organometallic substances can be classified in Class 4.2 or 4.3 with additional subsidiary risks, depending on their properties, a specific classification flow chart for these substances is given in 2.3.6.*

2.2.43.1.6 If substances of Class 4.3, as a result of admixtures, come into different categories of risk from those to which the substances mentioned by name in Table A of Chapter 3.2 belong, these mixtures shall be assigned to the entries to which they belong on the basis of their actual degree of danger.

NOTE: *For the classification of solutions and mixtures (such as preparations and wastes) see also 2.1.3.*

2.2.43.1.7 On the basis of the test procedures in accordance with the Manual of Tests and Criteria, Part III, Section 33.4, and the criteria set out in paragraph 2.2.43.1.5, it may also be determined whether the nature of a substance mentioned by name is such that the substance is not subject to the provisions for this Class.

Assignment of packing groups

2.2.43.1.8 Substances and articles classified under the various entries in Table A of Chapter 3.2 shall be assigned to packing groups I, II or III on the basis of test procedures of the Manual of Tests and Criteria, Part III, section 33.4, in accordance with the following criteria:

(a) Packing group I shall be assigned to any substance which reacts vigorously with water at ambient temperature and generally demonstrates a tendency for the gas produced to ignite spontaneously, or one which reacts readily with water at ambient temperatures such that the rate of evolution of flammable gas is equal to or greater than 10 litres per kilogramme of substance over any one minute period;

(b) Packing group II shall be assigned to any substance which reacts readily with water at ambient temperature such that the maximum rate of evolution of flammable gas is equal to or greater than 20 litres per kilogramme of substance per hour, and which does not meet the criteria of packing group I;

(c) Packing group III shall be assigned to any substance which reacts slowly with water at ambient temperature such that the maximum rate of evolution of flammable gas is greater than 1 litre per kilogramme of substance per hour, and which does not meet the criteria of packing groups I or II.

2.2.43.2 ***Substances not accepted for carriage***

Water-reactive solids, flammable, assigned to UN No. 3132, water-reactive solids, oxidizing, assigned to UN No. 3133 and water-reactive solids, self-heating, assigned to UN No.3135 shall not be accepted for carriage unless they meet the requirements for Class 1 (see also 2.1.3.7).

2.2.43.3 *List of collective entries*

Substances which, in contact with water, emit flammable gases			
Without subsidiary risk W	**liquid**	**W1**	1389 ALKALI METAL AMALGAM, LIQUID 1391 ALKALI METAL DISPERSION or 1391 ALKALINE EARTH METAL DISPERSION 1392 ALKALINE EARTH METAL AMALGAM, LIQUID 1420 POTASSIUM METAL ALLOYS, LIQUID 1421 ALKALI METAL ALLOY, LIQUID, N.O.S. 1422 POTASSIUM SODIUM ALLOYS, LIQUID 3398 ORGANOMETALLIC SUBSTANCE, LIQUID, WATER-REACTIVE 3148 WATER-REACTIVE LIQUID, N.O.S.
	solid	**W2** [a]	1390 ALKALI METAL AMIDES 3401 ALKALI METAL AMALGAM, SOLID 3402 ALKALINE EARTH METAL AMALGAM, SOLID 3170 ALUMINIUM SMELTING BY-PRODUCTS or 3170 ALUMINIUM REMELTING BY-PRODUCTS 3403 POTASSIUM METAL ALLOYS, SOLID 3404 POTASSIUM SODIUM ALLOYS, SOLID 1393 ALKALINE EARTH METAL ALLOY, N.O.S. 1409 METAL HYDRIDES, WATER-REACTIVE, N.O.S. 3208 METALLIC SUBSTANCE, WATER-REACTIVE, N.O.S. 3395 ORGANOMETALLIC SUBSTANCE, SOLID, WATER-REACTIVE 2813 WATER-REACTIVE SOLID, N.O.S.
	articles	**W3**	3292 BATTERIES, CONTAINING SODIUM or 3292 CELLS, CONTAINING SODIUM
Liquid, flammable		**WF1**	3399 ORGANOMETALLIC SUBSTANCE, LIQUID, WATER-REACTIVE, FLAMMABLE
Solid, flammable		**WF2**	3396 ORGANOMETALLIC SUBSTANCE, SOLID, WATER-REACTIVE, FLAMMABLE 3132 WATER-REACTIVE SOLID, FLAMMABLE, N.O.S. (not allowed, see 2.2.43.2)
Solid, self-heating		**WS** [b]	3397 ORGANOMETALLIC SUBSTANCE, SOLID, WATER-REACTIVE, SELF-HEATING 3209 METALLIC SUBSTANCE, WATER-REACTIVE, SELF-HEATING, N.O.S. 3135 WATER-REACTIVE SOLID, SELF-HEATING, N.O.S. (not allowed, see 2.2.43.2)
Solid, oxidizing		**WO**	3133 WATER-REACTIVE SOLID, OXIDIZING, N.O.S. (not allowed, see 2.2.43.2)
Toxic WT	**liquid**	**WT1**	3130 WATER-REACTIVE LIQUID, TOXIC, N.O.S.
	solid	**WT2**	3134 WATER-REACTIVE SOLID, TOXIC, N.O.S.
Corrosive WC	**liquid**	**WC1**	3129 WATER-REACTIVE LIQUID, CORROSIVE, N.O.S.
	solid	**WC2**	3131 WATER-REACTIVE SOLID, CORROSIVE, N.O.S.
Flammable, corrosive		**WFC** [c]	2988 CHLOROSILANES, WATER-REACTIVE, FLAMMABLE, CORROSIVE, NO.S. (No other collective entry with this classification code available, if need be, classification under a collective entry with a classification code to be determined according to the table of precedence of hazard in 2.1.3.9.)

[a] *Metals and metal alloys which, in contact with water, do not emit flammable gases and are not pyrophoric or self-heating, but which are readily flammable, are substances of Class 4.1. Alkaline-earth metals and alkaline-earth metal alloys in pyrophoric form are substances of Class 4.2 Dust and powders of metals in pyrophoric form are substances of Class 4.2. Metals and metal alloys in pyrophoric form are substances of Class 4.2. Compounds of phosphorus with heavy metals such as iron, copper, etc. are not subject to the provisions of ADR.*

[b] *Metals and metal alloys in pyrophoric form are substances of Class 4.2.*

[c] *Chlorosilanes, having a flash-point of less than 23 °C and which, in contact with water, do not emit flammable gases, are substances of Class 3. Chlorosilanes, having a flash-point equal to or greater than 23 °C and which, in contact with water, do not emit flammable gases, are substances of Class 8.*

2.2.51 Class 5.1 Oxidizing substances

2.2.51.1 *Criteria*

2.2.51.1.1 The heading of Class 5.1 covers substances which, while in themselves not necessarily combustible, may, generally by yielding oxygen, cause or contribute to the combustion of other material, and articles containing such substances.

2.2.51.1.2 The substances of Class 5.1 and articles containing such substances are subdivided as follows:

O Oxidizing substances without subsidiary risk or articles containing such substances:

O1 Liquid;
O2 Solid;
O3 Articles;

OF Oxidizing substances, solid, flammable;

OS Oxidizing substances, solid, self-heating;

OW Oxidizing substances, solid which, in contact with water, emit flammable gases;

OT Oxidizing substances, toxic:

OT1 Liquid;
OT2 Solid;

OC Oxidizing substances, corrosive:

OC1 Liquid;
OC2 Solid;

OTC Oxidizing substances, toxic, corrosive.

2.2.51.1.3 Substances and articles classified in Class 5.1 are listed in Table A of Chapter 3.2. The assignment of substances and articles not mentioned by name in Table A of Chapter 3.2 to the relevant entry of 2.2.51.3 in accordance with the provisions of Chapter 2.1 can be based on the tests, methods and criteria in paragraphs 2.2.51.1.6-2.2.51.1.9 below and the Manual of Tests and Criteria, Part III, Section 34.4. In the event of divergence between test results and known experience, judgement based on known experience shall take precedence over test results.

2.2.51.1.4 If substances of Class 5.1, as a result of admixtures, come into different categories of risk from those to which the substances mentioned by name in Table A of Chapter 3.2 belong, these mixtures or solutions shall be assigned to the entries to which they belong on the basis of their actual degree of danger.

NOTE: *For the classification of solutions and mixtures (such as preparations and wastes), see also Section 2.1.3.*

2.2.51.1.5 On the basis of the test procedures in the Manual of Tests and Criteria, Part III, Section 34.4 and the criteria set out in 2.2.51.1.6 to 2.2.51.1.9 it may also be determined whether the nature of a substance mentioned by name in Table A of Chapter 3.2 is such that the substance is not subject to the provisions for this class.

Oxidizing solids

Classification

2.2.51.1.6 When oxidizing solid substances not mentioned by name in Table A of Chapter 3.2 are assigned to one of the entries listed in 2.2.51.3 on the basis of the test procedure in accordance with the Manual of Tests and Criteria, Part III, sub-section 34.4.1, the following criteria shall apply:

A solid substance shall be assigned to Class 5.1 if, in the 4:1 or the 1:1 sample-to-cellulose ratio (by mass) tested, it ignites or burns or exhibits mean burning times equal to or less than that of a 3:7 mixture (by mass) of potassium bromate and cellulose.

Assignment of packing groups

2.2.51.1.7 Oxidizing solids classified under the various entries in Table A of Chapter 3.2 shall be assigned to packing groups I, II or III on the basis of test procedures of the Manual of Tests and Criteria, Part III, sub-section 34.4.1, in accordance with the following criteria:

(a) Packing group I: any substance which, in the 4:1 or 1:1 sample-to-cellulose ratio (by mass) tested, exhibits a mean burning time less than the mean burning time of a 3:2 mixture, by mass, of potassium bromate and cellulose;

(b) Packing group II: any substance which, in the 4:1 or 1:1 sample-to-cellulose ratio (by mass) tested, exhibits a mean burning time equal to or less than the mean burning time of a 2:3 mixture (by mass) of potassium bromate and cellulose and the criteria for packing group I are not met;

(c) Packing group III: any substance which, in the 4:1 or 1:1 sample-to-cellulose ratio (by mass) tested, exhibits a mean burning time equal to or less than the mean burning time of a 3:7 mixture (by mass) of potassium bromate and cellulose and the criteria for packing groups I and II are not met.

Oxidizing liquids

Classification

2.2.51.1.8 When oxidizing liquid substances not mentioned by name in Table A of Chapter 3.2 are assigned to one of the entries listed in sub-section 2.2.51.3 on the basis of the test procedure in accordance with the Manual of Tests and Criteria, Part III, sub-section 34.4.2, the following criteria shall apply:

A liquid substance shall be assigned to Class 5.1 if, in the 1:1 mixture, by mass, of substance and cellulose tested, it exhibits a pressure rise of 2070 kPa gauge or more and a mean pressure rise time equal to or less than the mean pressure rise time of a 1:1 mixture, by mass, of 65% aqueous nitric acid and cellulose.

Assignment of packing groups

2.2.51.1.9 Oxidizing liquids classified under the various entries in Table A of Chapter 3.2 shall be assigned to packing groups I, II or III on the basis of test procedures of the Manual of Tests and Criteria, Part III, section 34.4.2, in accordance with the following criteria:

(a) Packing group I: any substance which, in the 1:1 mixture, by mass, of substance and cellulose tested, spontaneously ignites; or the mean pressure rise time of a 1:1 mixture, by mass, of substance and cellulose is less than that of a 1:1 mixture, by mass, of 50% perchloric acid and cellulose;

(b) Packing group II: any substance which, in the 1:1 mixture, by mass, of substance and cellulose tested, exhibits a mean pressure rise time less than or equal to the mean pressure rise time of a 1:1 mixture, by mass, of 40% aqueous sodium chlorate solution and cellulose; and the criteria for packing group I are not met;

(c) Packing group III: any substance which, in the 1:1 mixture, by mass, of substance and cellulose tested, exhibits a mean pressure rise time less than or equal to the mean pressure rise time of a 1:1 mixture, by mass, of 65% aqueous nitric acid and cellulose; and the criteria for packing groups I and II are not met.

2.2.51.2 ***Substances not accepted for carriage***

2.2.51.2.1 The chemically unstable substances of Class 5.1 shall not be accepted for carriage unless the necessary steps have been taken to prevent their dangerous decomposition or polymerization during carriage. To this end it shall in particular be ensured that receptacles and tanks do not contain any material liable to promote these reactions.

2.2.51.2.2 The following substances and mixtures shall not be accepted for carriage:

- oxidizing solids, self-heating, assigned to UN No. 3100, oxidizing solids, water-reactive, assigned to UN No. 3121 and oxidizing solids, flammable, assigned to UN No. 3137, unless they meet the requirements for Class 1 (see also 2.1.3.7);

- hydrogen peroxide, not stabilized or hydrogen peroxide, aqueous solutions, not stabilized containing more than 60 % hydrogen peroxide;

- tetranitromethane not free from combustible impurities;

- perchloric acid solutions containing more than 72 % (mass) acid, or mixtures of perchloric acid with any liquid other than water;

- chloric acid solution containing more than 10 % chloric acid or mixtures of chloric acid with any liquid other than water;

- halogenated fluor compounds other than UN Nos. 1745 BROMINE PENTAFLUORIDE; 1746 BROMINE TRIFLUORIDE and 2495 IODINE PENTAFLUORIDE of Class 5.1 as well as UN Nos. 1749 CHLORINE TRIFLUORIDE and 2548 CHLORINE PENTAFLUORIDE of Class 2;

- ammonium chlorate and its aqueous solutions and mixtures of a chlorate with an ammonium salt;

- ammonium chlorite and its aqueous solutions and mixtures of a chlorite with an ammonium salt;

- mixtures of a hypochlorite with an ammonium salt;

- ammonium bromate and its aqueous solutions and mixtures of a bromate with an ammonium salt;

- ammonium permanganate and its aqueous solutions and mixtures of a permanganate with an ammonium salt;

- ammonium nitrate containing more than 0.2 % combustible substances (including any organic substance calculated as carbon) unless it is a constituent of a substance or article of Class 1;

- fertilizers having an ammonium nitrate content (in determining the ammonium nitrate content, all nitrate ions for which a molecular equivalent of ammonium ions is present in the mixture shall be calculated as ammonium nitrate) or a content in combustible substances exceeding the values specified in special provision 307 except under the conditions applicable to Class 1;

- ammonium nitrite and its aqueous solutions and mixtures of an inorganic nitrite with an ammonium salt;

- mixtures of potassium nitrate, sodium nitrite and an ammonium salt.

2.2.51.3 *List of collective entries*

Oxidizing substances	**liquid**	**O1**	3210 CHLORATES, INORGANIC, AQUEOUS SOLUTION, N.O.S. 3211 PERCHLORATES, INORGANIC, AQUEOUS SOLUTION, N.O.S. 3213 BROMATES, INORGANIC, AQUEOUS SOLUTION, N.O.S. 3214 PERMANGANATES, INORGANIC, AQUEOUS SOLUTION, N.O.S. 3216 PERSULPHATES, INORGANIC, AQUEOUS SOLUTION, N.O.S. 3218 NITRATES, INORGANIC, AQUEOUS SOLUTION, N.O.S. 3219 NITRITES, INORGANIC, AQUEOUS SOLUTION, N.O.S. 3139 OXIDIZING LIQUID, N.O.S.
Without subsidiary risk **O**	**solid**	**O2**	1450 BROMATES, INORGANIC, N.O.S 1461 CHLORATES, INORGANIC, N.O.S. 1462 CHLORITES, INORGANIC, N.O.S. 1477 NITRATES, INORGANIC, N.O.S 1481 PERCHLORATES, INORGANIC, N.O.S. 1482 PERMANGANATES, INORGANIC, N.O.S. 1483 PEROXIDES, INORGANIC, N.O.S 2627 NITRITES, INORGANIC, N.O.S. 3212 HYPOCHLORITES, INORGANIC, N.O.S. 3215 PERSULPHATES, INORGANIC, N.O.S. 1479 OXIDIZING SOLID, N.O.S.
	articles	**O3**	3356 OXYGEN GENERATOR, CHEMICAL
Solid, flammable		**OF**	3137 OXIDIZING SOLID, FLAMMABLE, N.O.S. (not allowed, see 2.2.51.2)
Solid, self-heating		**OS**	3100 OXIDIZING SOLID, SELF-HEATING, N.O.S. (not allowed, see 2.2.51.2)
Solid, water reactive		**OW**	3121 OXIDIZING SOLID, WATER REACTIVE, N.O.S. (not allowed, see 2.2.51.2)
Toxic **OT**	**liquid**	**OT1**	3099 OXIDIZING LIQUID, TOXIC, N.O.S.
	solid	**OT2**	3087 OXIDIZING SOLID, TOXIC, N.O.S.
Corrosive **OC**	**liquid**	**OC1**	3098 OXIDIZING LIQUID, CORROSIVE, N.O.S.
	solid	**OC2**	3085 OXIDIZING SOLID, CORROSIVE, N.O.S.
Toxic, corrosive		**OTC**	(No collective entry with this classification code available; if need be, classification under a collective entry with a classification code to be determined according to the table of precedence of hazard in 2.1.3.9.)

2.2.52 Class 5.2 Organic peroxides

2.2.52.1 *Criteria*

2.2.52.1.1 The heading of Class 5.2 covers organic peroxides and formulations of organic peroxides.

2.2.52.1.2 The substances of Class 5.2 are subdivided as follows:

P1 Organic peroxides, not requiring temperature control;
P2 Organic peroxides, requiring temperature control.

Definition

2.2.52.1.3 *Organic peroxides* are organic substances which contain the bivalent -O-O- structure and may be considered derivatives of hydrogen peroxide, where one or both of the hydrogen atoms have been replaced by organic radicals.

Properties

2.2.52.1.4 Organic peroxides are liable to exothermic decomposition at normal or elevated temperatures. The decomposition can be initiated by heat, contact with impurities (e.g. acids, heavy-metal compounds, amines), friction or impact. The rate of decomposition increases with temperature and varies with the organic peroxide formulation. Decomposition may result in the evolution of harmful, or flammable, gases or vapours. For certain organic peroxides the temperature shall be controlled during carriage. Some organic peroxides may decompose explosively, particularly if confined. This characteristic may be modified by the addition of diluents or by the use of appropriate packagings. Many organic peroxides burn vigorously. Contact of organic peroxides with the eyes is to be avoided. Some organic peroxides will cause serious injury to the cornea, even after brief contact, or will be corrosive to the skin.

***NOTE**: Test methods for determining the flammability of organic peroxides are set out in the Manual of Tests and Criteria, Part III, sub-section 32.4. Because organic peroxides may react vigorously when heated, it is recommended to determine their flash-point using small sample sizes such as described in ISO 3679:1983.*

Classification

2.2.52.1.5 Any organic peroxide shall be considered for classification in Class 5.2 unless the organic peroxide formulation contains:

(a) Not more than 1.0 % available oxygen from the organic peroxides when containing not more than 1.0 % hydrogen peroxide;

(b) Not more than 0.5 % available oxygen from the organic peroxides when containing more than 1.0 % but not more than 7.0 % hydrogen peroxide.

***NOTE:** The available oxygen content (%) of an organic peroxide formulation is given by the formula*

$$16 \times \sum (n_i \times c_i / m_i)$$

where:
n_i = *number of peroxygen groups per molecule of organic peroxide i;*
c_i = *concentration (mass %) of organic peroxide i; and*
m_i = *molecular mass of organic peroxide i.*

2.2.52.1.6 Organic peroxides are classified into seven types according to the degree of danger they present. The types of organic peroxide range from type A, which is not accepted for carriage in the packaging in which it is tested, to type G, which is not subject to the provisions of Class 5.2. The classification of types B to F is directly related to the maximum quantity allowed in one packaging. The principles to be applied to the classification of substances not listed in 2.2.52.4 are set out in the Manual of Tests and Criteria, Part II.

2.2.52.1.7 Organic peroxides which have already been classified and are already permitted for carriage in packagings are listed in 2.2.52.4, those already permitted for carriage in IBCs are listed in 4.1.4.2, packing instruction IBC520 and those already permitted for carriage in tanks in accordance with Chapters 4.2 and 4.3 are listed in 4.2.5.2, portable tank instruction T23. Each permitted substance listed is assigned to a generic entry of Table A of Chapter 3.2 (UN Nos. 3101 to 3120) and appropriate subsidiary risks and remarks providing relevant transport information are given.

These generic entries specify:

- the type (B to F) of organic peroxide (see 2.2.52.1.6 above);
- physical state (liquid/solid); and
- temperature control (when required), see 2.2.52.1.15 to 2.2.52.1.18.

Mixtures of these formulations may be classified as the same type of organic peroxide as that of the most dangerous component and be carried under the conditions of carriage given for this type. However, as two stable components can form a thermally less stable mixture, the self-accelerating decomposition temperature (SADT) of the mixture shall be determined and, if necessary, the control and emergency temperatures derived from the SADT in accordance with 2.2.52.1.16.

2.2.52.1.8 Classification of organic peroxides, formulations or mixtures of organic peroxides not listed in 2.2.52.4, 4.1.4.2 packing instruction IBC520 or 4.2.5.2, portable tank instruction T23, and assignment to a collective entry shall be made by the competent authority of the country of origin. The statement of approval shall contain the classification and the relevant conditions of carriage. If the country of origin is not a Contracting Party to ADR, the classification and conditions of carriage shall be recognized by the competent authority of the first country Contracting Party to ADR reached by the consignment.

2.2.52.1.9 Samples of organic peroxides or formulations of organic peroxides not listed in 2.2.52.4, for which a complete set of test results is not available and which are to be carried for further testing or evaluation, shall be assigned to one of the appropriate entries for organic peroxides type C provided the following conditions are met:

- the available data indicate that the sample would be no more dangerous than organic peroxides type B;
- the sample is packaged in accordance with packing method OP2 and the quantity per transport unit is limited to 10 kg;
- the available data indicate that the control temperature, if any, is sufficiently low to prevent any dangerous decomposition and sufficiently high to prevent any dangerous phase separation.

Desensitization of organic peroxides

2.2.52.1.10 In order to ensure safety during carriage, organic peroxides are in many cases desensitized by organic liquids or solids, inorganic solids or water. Where a percentage of a substance is stipulated, this refers to the percentage by mass, rounded to the nearest whole number. In general, desensitization shall be such that, in case of spillage, the organic peroxide will not concentrate to a dangerous extent.

2.2.52.1.11 Unless otherwise stated for the individual organic peroxide formulation, the following definition(s) shall apply to diluents used for desensitization:

- diluents type A are organic liquids which are compatible with the organic peroxide and which have a boiling point of not less than 150 °C. Type A diluents may be used for desensitizing all organic peroxides;

- diluents type B are organic liquids which are compatible with the organic peroxide and which have a boiling point of less than 150 °C but not less than 60 °C and a flash-point of not less than 5 °C.

Type B diluents may be used for desensitization of all organic peroxides provided that the boiling point of the liquid is at least 60 °C higher than the SADT in a 50 kg package.

2.1.52.1.12 Diluents, other than type A or type B, may be added to organic peroxide formulations as listed in 2.2.52.4 provided that they are compatible. However, replacement of all or part of a type A or type B diluent by another diluent with differing properties requires that the organic peroxide formulation be re-assessed in accordance with the normal acceptance procedure for Class 5.2.

2.2.52.1.13 Water may only be used for the desensitization of organic peroxides which are listed in 2.2.52.4 or in the competent authority decision according to 2.2.52.1.8 as being "with water" or "as a stable dispersion in water". Samples of organic peroxides or formulations of organic peroxides not listed in 2.2.52.4 may also be desensitized with water provided the requirements of 2.2.52.1.9 are met.

2.2.52.1.14 Organic and inorganic solids may be used for desensitization of organic peroxides provided that they are compatible. Compatible liquids and solids are those which have no detrimental influence on the thermal stability and hazard type of the organic peroxide formulation.

Temperature control requirements

2.2.52.1.15 Certain organic peroxides may only be carried under temperature-controlled conditions. The control temperature is the maximum temperature at which the organic peroxide can be safely carried. It is assumed that the temperature of the immediate surroundings of a package only exceeds 55 °C during carriage for a relatively short time in a 24 hour period. In the event of loss of temperature control, it may be necessary to implement emergency procedures. The emergency temperature is the temperature at which such procedures shall be implemented.

2.2.52.1.16 The control and emergency temperatures are derived from the SADT which is defined as the lowest temperature at which self-accelerating decomposition may occur with a substance in the packaging as used during carriage (see Table 1). The SADT shall be determined in order to decide whether a substance shall be subjected to temperature control during carriage. Provisions for the determination of the SADT are given in the Manual of Tests and Criteria, Part II, Sections 20 and 28.4.

Table 1: Derivation of control and emergency temperatures

Type of receptacle	SADT [a]	Control temperature	Emergency temperature
Single packagings and IBCs	20 °C or less	20 °C below SADT	10 °C below SADT
	over 20 °C to 35 °C	15 °C below SADT	10 °C below SADT
	over 35 °C	10 °C below SADT	5 °C below SADT
Tanks	not greater than 50 °C	10 °C below SADT	5 °C below SADT

[a] *SADT of the substance as packaged for carriage*

2.2.52.1.17 The following organic peroxides shall be subject to temperature control during carriage:

- organic peroxides types B and C with an SADT ≤ 50 °C;
- organic peroxides type D showing a medium effect when heated under confinement with an SADT ≤ 50 °C or showing a low or no effect when heated under confinement with an SADT ≤ 45 °C; and
- organic peroxides types E and F with an SADT ≤ 45 °C.

***NOTE**: Provisions for the determination of the effects of heating under confinement are given in the Manual of Tests and Criteria, Part II, Section 20 and Sub-section 28.4.*

2.2.52.1.18 Where applicable, control and emergency temperatures are listed in 2.2.52.4. The actual temperature during carriage may be lower than the control temperature but shall be selected so as to avoid dangerous separation of phases.

2.2.52.2 ***Substances not accepted for carriage***

Organic peroxides, type A, shall not be accepted for carriage under the provisions of Class 5.2 (see Manual of Tests and Criteria, Part II, paragraph 20.4.3 (a)).

2.2.52.3 *List of collective entries*

Organic peroxides			ORGANIC PEROXIDE TYPE A, LIQUID	Not accepted for carriage, see 2.2.52.2
			ORGANIC PEROXIDE TYPE A, SOLID	
		3101	ORGANIC PEROXIDE TYPE B, LIQUID	
		3102	ORGANIC PEROXIDE TYPE B, SOLID	
		3103	ORGANIC PEROXIDE TYPE C, LIQUID	
		3104	ORGANIC PEROXIDE TYPE C, SOLID	
Not requiring temperature control	**P1**	3105	ORGANIC PEROXIDE TYPE D, LIQUID	
		3106	ORGANIC PEROXIDE TYPE D, SOLID	
		3107	ORGANIC PEROXIDE TYPE E, LIQUID	
		3108	ORGANIC PEROXIDE TYPE E, SOLID	
		3109	ORGANIC PEROXIDE TYPE F, LIQUID	
		3110	ORGANIC PEROXIDE TYPE F, SOLID	
			ORGANIC PEROXIDE TYPE G, LIQUID	Not subject to the provisions applicable to Class 5.2, see 2.2.52.1.6
			ORGANIC PEROXIDE TYPE G, SOLID	
		3111	ORGANIC PEROXIDE TYPE B, LIQUID, TEMPERATURE CONTROLLED	
		3112	ORGANIC PEROXIDE TYPE B, SOLID, TEMPERATURE CONTROLLED	
		3113	ORGANIC PEROXIDE TYPE C, LIQUID, TEMPERATURE CONTROLLED	
		3114	ORGANIC PEROXIDE TYPE C, SOLID, TEMPERATURE CONTROLLED	
Requiring temperature control	**P2**	3115	ORGANIC PEROXIDE TYPE D, LIQUID, TEMPERATURE CONTROLLED	
		3116	ORGANIC PEROXIDE TYPE D, SOLID, TEMPERATURE CONTROLLED	
		3117	ORGANIC PEROXIDE TYPE E, LIQUID, TEMPERATURE CONTROLLED	
		3118	ORGANIC PEROXIDE TYPE E, SOLID, TEMPERATURE CONTROLLED	
		3119	ORGANIC PEROXIDE TYPE F, LIQUID, TEMPERATURE CONTROLLED	
		3120	ORGANIC PEROXIDE TYPE F, SOLID, TEMPERATURE CONTROLLED	

2.2.52.4 *List of currently assigned organic peroxides in packagings*

In the column "Packing Method", codes "OP1" to "OP8" refer to packing methods in 4.1.4.1, packing instruction P520 (see also 4.1.7.1). Organic peroxides to be carried shall fulfil the classification and the control and emergency temperatures (derived from the SADT) as listed. For substances permitted in IBCs, see 4.1.4.2, packing instruction IBC520 and, for those permitted in tanks according to Chapters 4.2 and 4.3, see 4.2.5.2, portable tank instruction T23.

ORGANIC PEROXIDE	Concentration (%)	Diluent type A (%)	Diluent type B (%)	Inert solid (%)	Water	Packing Method	Control temperature (°C)	Emergency temperature (°C)	Number (Generic entry)	Subsidiary risks and remarks
ACETYL ACETONE PEROXIDE	≤ 42	≥ 48			≥8	OP7			3105	2)
"	≤ 32 as a paste					OP7			3106	20)
ACETYL CYCLOHEXANESULPHONYL PEROXIDE	≤ 82				≥ 12	OP4	-10	0	3112	3)
"	≤ 32		≥ 68			OP7	-10	0	3115	
tert-AMYL HYDROPEROXIDE	≤ 88	≥ 6			≥ 6	OP8			3107	
tert-AMYL PEROXYACETATE	≤ 62	≥ 38				OP7			3105	
tert-AMYL PEROXYBENZOATE	≤ 100					OP5			3103	
tert-AMYL PEROXY-2-ETHYLHEXANOATE	≤ 100					OP7	+20	+25	3115	
tert-AMYL PEROXY-2-ETHYLHEXYL CARBONATE	≤ 100					OP7			3105	
tert-AMYL PEROXY ISOPROPYL CARBONATE	≤ 77	≥ 23				OP5			3103	
tert-AMYL PEROXYNEODECANOATE	≤ 77		≥ 23			OP7	0	+10	3115	
tert-AMYL PEROXYPIVALATE	≤ 77		≥ 23			OP5	+10	+15	3113	
tert-AMYLPEROXY-3,5,5-TRIMETHYLHEXANOATE	≤ 100					OP5			3101	3)
tert-BUTYL CUMYL PEROXIDE	> 42 - 100					OP8			3107	
"	≤ 52			≥ 48		OP8			3108	
n-BUTYL-4,4-DI-(tert-BUTYLPEROXY)VALERATE	> 52 - 100					OP5			3103	
"	≤ 52			≥ 48		OP8			3108	
tert-BUTYL HYDROPEROXIDE	>79 - 90				≥ 10	OP5			3103	13)
"	≤ 80	≥ 20				OP7			3105	4) 13)
"	≤ 79				> 14	OP8			3107	13) 23)
"	≤ 72				≥ 28	OP8			3109	13)
tert-BUTYL HYDROPEROXIDE + DI-tert-BUTYLPEROXIDE	< 82 + >9				≥ 7	OP5			3103	13)
tert-BUTYL MONOPEROXYMALEATE	> 52 - 100					OP5			3102	3)
"	≤ 52	≥ 48				OP6			3103	
"	≤ 52			≥ 48		OP8			3108	
"	≤ 52 as a paste					OP8			3108	
tert-BUTYL PEROXYACETATE	> 52 - 77	≥ 23				OP5			3101	3)
"	> 32 - 52	≥ 48				OP6			3103	
"	≤ 32		≥ 68			OP8			3109	
tert-BUTYL PEROXYBENZOATE	> 77 - 100					OP5			3103	
"	> 52 - 77	≥23				OP7			3105	
"	≤ 52			≥ 48		OP7			3106	

ORGANIC PEROXIDE	Concentration (%)	Diluent type A (%)	Diluent type B (%)	Inert solid (%)	Water	Packing Method	Control temperature (°C)	Emergency temperature (°C)	Number (Generic entry)	Subsidiary risks and remarks
tert-BUTYL PEROXYBUTYL FUMARATE	≤ 52	≥ 48				OP7			3105	
tert-BUTYL PEROXYCROTONATE	≤ 77	≥ 23				OP7			3105	
tert-BUTYL PEROXYDIETHYLACETATE	≤ 100					OP5	+20	+25	3113	
tert-BUTYL PEROXY-2-ETHYLHEXANOATE	> 52 – 100					OP6	+20	+25	3113	
"	> 32 - 52		≥ 48			OP8	+30	+35	3117	
"	≤ 52			≥ 48		OP8	+20	+25	3118	
"	≤ 32		≥ 68			OP8	+40	+45	3119	
tert-BUTYL PEROXY-2-ETHYLHEXANOATE + 2,2-DI-(tert-BUTYLPEROXY)BUTANE	≤ 12 +≤ 14	≥ 14		≥ 60		OP7			3106	
"	≤ 31 + ≤ 36		≥ 33			OP7	+35	+40	3115	
tert-BUTYL PEROXY-2-ETHYLHEXYLCARBONATE	≤ 100					OP7			3105	
tert-BUTYL PEROXYISOBUTYRATE	> 52 - 77		≥ 23			OP5	+15	+20	3111	3)
"	≤ 52		≥ 48			OP7	+15	+20	3115	
tert-BUTYLPEROXY ISOPROPYLCARBONATE	≤ 77	≥ 23				OP5			3103	
1-(2-tert-BUTYLPEROXY ISOPROPYL)-3-ISOPROPENYLBENZENE	≤ 77	≥ 23				OP7			3105	
"	≤ 42			≥ 58		OP8			3108	
tert-BUTYL PEROXY-2-METHYLBENZOATE	≤ 100					OP5			3103	
tert-BUTYL PEROXYNEODECANOATE	> 77 - 100					OP7	-5	+5	3115	
"	≤ 77	≥ 23				OP7	0	+10	3115	
"	≤ 52 as a stable dispersion in water					OP8	0	+10	3119	
"	≤ 42 as a stable dispersion in water (frozen)					OP8	0	+10	3118	
"	≤ 32	≥ 68				OP8	0	+10	3119	
tert-BUTYL PEROXYNEOHEPTANOATE	≤ 77	≥ 23				OP7	0	+10	3115	
"	≤ 42 as a stable dispersion in water					OP8	0	+10	3117	
tert-BUTYL PEROXYPIVALATE	> 67 - 77	≥ 23				OP5	0	+10	3113	
"	> 27 - 67		≥ 33			OP7	0	+10	3115	
"	≤ 27		≥ 73			OP8	+30	+35	3119	
tert-BUTYLPEROXY STEARYLCARBONATE	≤ 100					OP7			3106	
tert-BUTYL PEROXY-3,5,5-TRIMETHYLHEXANOATE	> 32 - 100					OP7			3105	
"	≤ 32		≥ 68			OP8			3109	

ORGANIC PEROXIDE	Concentration (%)	Diluent type A (%)	Diluent type B (%)	Inert solid (%)	Water	Packing Method	Control temperature (°C)	Emergency temperature (°C)	Number (Generic entry)	Subsidiary risks and remarks
3-CHLOROPEROXYBENZOIC ACID	> 57 - 86			≥ 14		OP1			3102	3)
"	≤ 57			≥ 3	≥ 40	OP7			3106	
"	≤ 77			≥ 6	≥ 17	OP7			3106	
CUMYL HYDROPEROXIDE	> 90 - 98	≤10				OP8			3107	13)
"	≤ 90	≥ 10				OP8			3109	13) 18)
CUMYL PEROXYNEODECANOATE	≤ 77		≥ 23			OP7	-10	0	3115	
"	≤ 52 as a stable dispersion in water					OP8	-10	0	3119	
CUMYL PEROXYNEOHEPTANOATE	≤ 77	≥ 23				OP7	-10	0	3115	
CUMYL PEROXYPIVALATE	≤ 77		≥ 23			OP7	-5	+5	3115	
CYCLOHEXANONE PEROXIDE(S)	≤ 91				≥ 9	OP6			3104	13)
"	≤ 72	≥ 28				OP7			3105	5)
"	≤ 72 as a paste					OP7			3106	5) 20)
"	≤ 32			≥ 68					Exempt	29)
DIACETONE ALCOHOL PEROXIDES	≤ 57		≥ 26		≥ 8	OP7	+40	+45	3115	6)
DIACETYL PEROXIDE	≤ 27		≥ 73			OP7	+20	+25	3115	7) 13)
DI-tert-AMYL PEROXIDE	≤ 100					OP8			3107	
1,1-DI-(tert-AMYLPEROXY)CYCLOHEXANE	≤ 82	≥ 18				OP6			3103	
DIBENZOYL PEROXIDE	> 51 - 100			≤ 48		OP2			3102	3)
"	> 77 - 94				≥ 6	OP4			3102	3)
"	≤ 77				≥ 23	OP6			3104	
"	≤ 62			≥ 28	≥ 10	OP7			3106	
"	> 52 – 62 as a paste					OP7			3106	20)
"	> 35 - 52			≥ 48		OP7			3106	
"	> 36 - 42	≥ 18			≤ 40	OP8			3107	
"	≤ 56.5 as a paste				≥ 15	OP8			3108	
"	≤ 52 as a paste					OP8			3108	20)
"	≤ 42 as a stable dispersion in water					OP8			3109	
"	≤ 35			≥ 65					Exempt	29)
DI-(4-tert-BUTYLCYCLOHEXYL) PEROXYDICARBONATE	≤ 100					OP6	+30	+35	3114	
"	≤ 42 as a stable dispersion in water					OP8	+30	+35	3119	

ORGANIC PEROXIDE	Concentration (%)	Diluent type A (%)	Diluent type B (%)	Inert solid (%)	Water	Packing Method	Control temperature (°C)	Emergency temperature (°C)	Number (Generic entry)	Subsidiary risks and remarks
DI-tert-BUTYL PEROXIDE	> 52 - 100					OP8			3107	
"	≤ 52		≥ 48			OP8			3109	25)
DI-tert-BUTYL PEROXYAZELATE	≤ 52	≥ 48				OP7			3105	
2,2-DI-(tert-BUTYLPEROXY)BUTANE	≤ 52	≥ 48				OP6			3103	
1,1-DI-(tert-BUTYLPEROXY) CYCLOHEXANE	> 80 - 100					OP5			3101	3)
"	> 52 - 80	≥ 20				OP5			3103	
"	> 42 - 52	≥ 48				OP7			3105	
"	≤ 42	≥ 13		≥ 45		OP7			3106	
"	≤ 42	≥ 58				OP8			3109	
"	≤ 27	≥ 25				OP8			3107	21)
"	≤ 13	≥ 13	≥ 74			OP8			3109	
DI-n-BUTYL PEROXYDICARBONATE	> 27 - 52		≥ 48			OP7	-15	-5	3115	
"	≤ 27		≥ 73			OP8	-10	0	3117	
"	≤ 42 as a stable dispersion in water (frozen)					OP8	-15	-5	3118	
DI-sec-BUTYL PEROXYDICARBONATE	> 52 - 100					OP4	-20	-10	3113	
"	≤ 52		≥ 48			OP7	-15	-5	3115	
1,6-Di-(tert-BUTYLPEROXY-CARBONYLOXY) HEXANE	≤ 72	≥ 28				OP5			3103	
DI-(2-tert-BUTYLPEROXYISOPROPYL)BENZENE(S)	> 42 - 100			≤ 57		OP7			3106	
"	≤ 42			≥ 58					Exempt	29)
DI-(tert-BUTYLPEROXY) PHTHALATE	> 42 - 52	≥ 48				OP7			3105	
"	≤ 52 as a paste					OP7			3106	20)
"	≤ 42	≥ 58				OP8			3107	
2,2-DI-(tert-BUTYLPEROXY)PROPANE	≤ 52	≥ 48				OP7			3105	
"	≤ 42	≥ 13		≥ 45		OP7			3106	
1,1-DI-(tert-BUTYLPEROXY)-3,3,5-TRIMETHYLCYCLOHEXANE	> 90 - 100					OP5			3101	3)
"	> 57 - 90	≥ 10				OP5			3103	
"	≤ 77		≥ 23			OP5			3103	
"	≤ 57			≥ 43		OP8			3110	
"	≤ 57	≥ 43				OP8			3107	
"	≤ 32	≥ 26	≥ 42			OP8			3107	

ORGANIC PEROXIDE	Concentration (%)	Diluent type A (%)	Diluent type B (%)	Inert solid (%)	Water	Packing Method	Control temperature (°C)	Emergency temperature (°C)	Number (Generic entry)	Subsidiary risks and remarks
DICETYL PEROXYDICARBONATE	≤ 100					OP7	+30	+35	3116	
"	≤ 42 as a stable dispersion in water					OP8	+30	+35	3119	
DI-4-CHLOROBENZOYL PEROXIDE	≤ 77				≥ 23	OP5			3102	3)
"	≤ 52 as a paste					OP7			3106	20)
"	≤ 32			≥ 68					Exempt	29)
DICUMYL PEROXIDE	> 52 - 100			≤ 57		OP8			3110	12)
"	≤ 52			≥ 48					Exempt	29)
DICYCLOHEXYL PEROXYDICARBONATE	> 91 - 100					OP3	+10	+15	3112	3)
"	≤ 91				≥ 9	OP5	+10	+15	3114	
"	≤ 42 as a stable dispersion in water					OP8	+15	+20	3119	
DIDECANOYL PEROXIDE	≤ 100					OP6	+30	+35	3114	
2,2-DI-(4,4-DI (tert-BUTYLPEROXY) CYCLOHEXYL) PROPANE	≤ 42			≥ 58		OP7			3106	
"	≤ 22		≥ 78			OP8			3107	
DI-2,4-DICHLOROBENZOYL PEROXIDE	≤ 77				≥ 23	OP5			3102	3)
"	≤ 52 as a paste with silicon oil					OP7			3106	
DI-(2-ETHOXYETHYL) PEROXYDICARBONATE	≤ 52		≥ 48			OP7	-10	0	3115	
1-(2-ETHYLHEXANOYLPEROXY)-1,3-DIMETHYLBUTYL PEROXYPIVALATE	≤ 52	≥ 45	≥ 10			OP7	-20	-10	3115	
DI-(2-ETHYLHEXYL) PEROXYDICARBONATE	> 77 – 100					OP5	-20	-10	3113	
"	≤ 77		≥ 23			OP7	-15	-5	3115	
"	≤ 62 as a stable dispersion in water					OP8	-15	-5	3117	
"	≤ 52 as a stable dispersion in water					OP8	-15	-5	3119	
"	≤ 52 as a stable dispersion in water (frozen)					OP8	-15	-5	3120	
2,2-DIHYDROPEROXYPROPANE	≤ 27			≥ 73		OP5			3102	3)
DI-(1-HYDROXYCYCLOHEXYL) PEROXIDE	≤ 100					OP7			3106	
DIISOBUTYRYL PEROXIDE	> 32 – 52		≥ 48			OP5	-20	-10	3111	3)
"	≤ 32		≥ 68			OP7	-20	-10	3115	

ORGANIC PEROXIDE	Concentration (%)	Diluent type A (%)	Diluent type B (%)	Inert solid (%)	Water	Packing Method	Control temperature (°C)	Emergency temperature (°C)	Number (Generic entry)	Subsidiary risks and remarks
DIISOPROPYLBENZENE DIHYDROPEROXIDE	≤ 82	≥ 5			≥ 5	OP7			3106	24)
DIISOPROPYL PEROXYDICARBONATE	> 52-100					OP2	-15	-5	3112	3)
"	≤ 52		≥ 48			OP7	-20	-10	3115	
"	≤ 28	≥ 72				OP7	-15	-5	3115	
DILAUROYL PEROXIDE	≤ 100					OP7			3106	
"	≤ 42 as a stable dispersion in water					OP8			3109	
DI-(3-METHOXYBUTYL) PEROXYDICARBONATE	≤ 52		≥ 48			OP7	-5	+5	3115	
DI-(2-METHYLBENZOYL) PEROXIDE	≤ 87				≥ 13	OP5	+30	+35	3112	3)
DI-(3-METHYLBENZOYL) PEROXIDE + BENZOYL (3-METHYLBENZOYL) PEROXIDE + DIBENZOYL PEROXIDE	≤ 20 + ≤ 18 + ≤ 4		≥ 58			OP7	+35	+40	3115	
DI-(4-METHYLBENZOYL) PEROXIDE	≤ 52 as a paste with silicon oil					OP7			3106	
2,5-DIMETHYL-2,5-DI-(BENZOYLPEROXY)HEXANE	> 82-100					OP5			3102	3)
"	≤ 82			≥ 18		OP7			3106	
"	≤ 82				≥ 18	OP5			3104	
2,5-DIMETHYL-2,5-DI-(tert-BUTYLPEROXY)HEXANE	> 52 – 100					OP7			3105	
"	≤ 47 as a paste					OP8			3108	
"	≤ 52	≥ 48				OP8			3109	
"	≤ 77			≥ 23		OP8			3108	
2,5-DIMETHYL-2,5-DI-(tert-BUTYLPEROXY)HEXYNE-3	> 86-100					OP5			3101	3)
"	>52-86	≥ 14				OP5			3103	26)
"	≤ 52			≥ 48		OP7			3106	
2,5-DIMETHYL-2,5-DI-(2-ETHYLHEXANOYLPEROXY)HEXANE	≤ 100					OP5	+20	+25	3113	
2,5-DIMETHYL-2,5-DIHYDROPEROXYHEXANE	≤ 82				≥ 18	OP6			3104	
2,5-DIMETHYL-2,5-DI-(3,5,5-TRIMETHYLHEXANOYLPEROXY)HEXANE	≤ 77	≥ 23				OP7			3105	
1,1-DIMETHYL-3-HYDROXYBUTYL PEROXYNEOHEPTANOATE	≤ 52	≥ 48				OP8	0	+10	3117	
DIMYRISTYL PEROXYDICARBONATE	≤ 100					OP7	+20	+25	3116	
"	≤ 42 as a stable dispersion in water					OP8	+20	+25	3119	

ORGANIC PEROXIDE	Concentration (%)	Diluent type A (%)	Diluent type B (%)	Inert solid (%)	Water	Packing Method	Control temperature (°C)	Emergency temperature (°C)	Number (Generic entry)	Subsidiary risks and remarks
DI-(2-NEODECANOYLPEROXYISOPROPYL) BENZENE	≤ 52	≥ 48				OP7	-10	0	3115	
DI-n-NONANOYL PEROXIDE	≤ 100					OP7	0	+10	3116	
DI-n-OCTANOYL PEROXIDE	≤ 100					OP5	+10	+15	3114	
DI-(2-PHENOXYETHYL) PEROXYDICARBONATE	>85-100					OP5			3102	3)
"	≤ 85				≥ 15	OP7			3106	
DIPROPIONYL PEROXIDE	≤ 27		≥ 73			OP8	+15	+20	3117	
DI-n-PROPYL PEROXYDICARBONATE	≤ 100					OP3	-25	-15	3113	
"	≤ 77		≥ 23			OP5	-20	-10	3113	
DISUCCINIC ACID PEROXIDE	> 72-100					OP4			3102	3) 17)
"	≤ 72				≥ 28	OP7	+10	+15	3116	
DI-(3,5,5-TRIMETHYLHEXANOYL) PEROXIDE	> 38-82	≥ 18				OP7	0	+10	3115	
"	≤ 52 as a stable dispersion in water					OP8	+10	+15	3119	
"	≤ 38	≥ 62				OP8	+20	+25	3119	
ETHYL 3,3-DI-(tert-AMYLPEROXY)BUTYRATE	≤ 67	≥ 33				OP7			3105	
ETHYL 3,3-DI-(tert-BUTYLPEROXY)BUTYRATE	> 77 - 100					OP5			3103	
"	≤ 77	≥ 23				OP7			3105	
"	≤ 52			≥ 48		OP7			3106	
tert-HEXYL PEROXYNEODECANOATE	≤ 71	≥ 29				OP7	0	+10	3115	
tert-HEXYL PEROXYPIVALATE	≤ 72		≥ 28			OP7	+10	+15	3115	
ISOPROPYL sec-BUTYL PEROXYDICARBONATE +DI-sec-BUTYL PEROXYDICARBONATE +DI-ISOPROPYL PEROXYDICARBONATE	≤ 32 + ≤ 15 – 18 ≤ 12 – 15	≥ 38				OP7	-20	-10	3115	
"	≤ 52 + ≤ 28 + ≤ 22					OP5	-20	-10	3111	3)
ISOPROPYLCUMYL HYDROPEROXIDE	≤ 72	≥ 28				OP8			3109	13)
p-MENTHYL HYDROPEROXIDE	> 72 - 100					OP7			3105	13)
"	≤ 72	≥ 28				OP8			3109	27)
METHYLCYCLOHEXANONE PEROXIDE(S)	≤ 67		≥ 33			OP7	+35	+40	3115	
METHYL ETHYL KETONE PEROXIDE(S)	see remark 8)	≥ 48				OP5			3101	3) 8) 13)
"	see remark 9)	≥ 55				OP7			3105	9)
"	see remark 10)	≥ 60				OP8			3107	10)
METHYL ISOBUTYL KETONE PEROXIDE(S)	≤ 62	≥ 19				OP7			3105	22)

ORGANIC PEROXIDE	Concentration (%)	Diluent type A (%)	Diluent type B (%)	Inert solid (%)	Water	Packing Method	Control temperature (°C)	Emergency temperature (°C)	Number (Generic entry)	Subsidiary risks and remarks
ORGANIC PEROXIDE, LIQUID, SAMPLE						OP2			3103	11)
ORGANIC PEROXIDE, LIQUID, SAMPLE, TEMPERATURE CONTROLLED						OP2			3113	11)
ORGANIC PEROXIDE, SOLID, SAMPLE						OP2			3104	11)
ORGANIC PEROXIDE, SOLID, SAMPLE, TEMPERATURE CONTROLLED						OP2			3114	11)
PEROXYACETIC ACID, TYPE D, stabilized	≤ 43					OP7			3105	13) 14) 19)
PEROXYACETIC ACID, TYPE E, stabilized	≤ 43					OP8			3107	13) 15) 19)
PEROXYACETIC ACID, TYPE F, stabilized	≤ 43					OP8			3109	13) 16) 19)
PEROXYLAURIC ACID	≤ 100					OP8	+35	+40	3118	
PINANYL HYDROPEROXIDE	> 56 – 100					OP7			3105	13)
"	≤ 56	≥ 44				OP8			3109	
POLYETHER POLY-tert-BUTYLPEROXY-CARBONATE	≤ 52		≥ 48			OP8			3107	
1,1,3,3-TETRAMETHYLBUTYL HYDROPEROXIDE	≤ 100					OP7			3105	
1,1,3,3-TETRAMETHYLBUTYL PEROXY-2 ETHYLHEXANOATE	≤ 100					OP7	+15	+20	3115	
1,1,3,3- TETRAMETHYLBUTYL PEROXYNEODECANOATE	≤ 72		≥ 28			OP7	-5	+5	3115	
"	≤ 52 as a stable dispersion in water					OP8	-5	+5	3119	
1,1,3,3-TETRAMETHYLBUTYL PEROXYPIVALATE	≤ 77	≥ 23				OP7	0	+10	3115	
3,6,9-TRIETHYL-3,6,9-TRIMETHYL -1,4,7 TRIPEROXONANE	≤ 42	≥ 58				OP7			3105	28)

Remarks (refer to the last column of the Table in 2.2.52.4):

1) *Diluent type B may always be replaced by diluent type A. The boiling point of diluent type B shall be at least 60°C higher than the SADT of the organic peroxide.*
2) *Available oxygen ≤ 4.7%.*
3) *"EXPLOSIVE" subsidiary risk label required (Model No.1, see 5.2.2.2.2).*
4) *Diluent may be replaced by di-tert-butyl peroxide.*
5) *Available oxygen ≤ 9%.*
6) *With ≤ 9% hydrogen peroxide; available oxygen ≤ 10%.*
7) *Only non-metallic packagings allowed.*
8) *Available oxygen > 10% and ≤ 10.7%, with or without water.*
9) *Available oxygen ≤ 10% , with or without water.*
10) *Available oxygen ≤ 8.2% , with or without water.*
11) *See 2.2.52.1.9.*
12) *Up to 2000 kg per receptacle assigned to ORGANIC PEROXIDE TYPE F on the basis of large scale trials.*
13) *"CORROSIVE" subsidiary risk label required (Model No.8, see 5.2.2.2.2).*
14) *Peroxyacetic acid formulations which fulfil the criteria of the Manual of Tests and Criteria, paragraph 20.4.3 (d).*
15) *Peroxyacetic acid formulations which fulfil the criteria of the Manual of Tests and Criteria, paragraph 20.4.3 (e).*
16) *Peroxyacetic acid formulations which fulfil the criteria of the Manual of Tests and Criteria, paragraph 20.4.3 (f).*
17) *Addition of water to this organic peroxide will decrease its thermal stability.*
18) *No "CORROSIVE" subsidiary risk label (Model No.8, see 5.2.2.2.2) required for concentrations below 80%.*
19) *Mixtures with hydrogen peroxide, water and acid(s).*
20) *With diluent type A, with or without water.*
21) *With ≥ 25% diluent type A by mass, and in addition ethylbenzene.*
22) *With ≥ 19%, diluent type A by mass, and in addition methyl isobutyl ketone.*
23) *With < 6% di-tert-butyl peroxide.*
24) *With ≤ 8% 1-isopropylhydroperoxy-4-isopropylhydroxybenzene.*
25) *Diluent type B with boiling point > 110 °C.*
26) *With < 0.5% hydroperoxides content.*
27) *For concentrations more than 56%, "CORROSIVE" subsidiary risk label required (Model No.8, see 5.2.2.2.2).*
28) *Available active oxygen ≤ 7.6% in diluent type A having a 95% boil-off point in the range of 200 - 260 °C.*
29) *Not subject to the requirements of ADR for Class 5.2.*

2.2.61 Class 6.1 Toxic substances

2.2.61.1 *Criteria*

2.2.61.1.1 The heading of Class 6.1 covers substances of which it is known by experience or regarding which it is presumed from experiments on animals that in relatively small quantities they are able by a single action or by action of short duration to cause damage to human health, or death, by inhalation, by cutaneous absorption or by ingestion.

2.2.61.1.2 Substances of Class 6.1 are subdivided as follows:

T Toxic substances without subsidiary risk:

- T1 Organic, liquid;
- T2 Organic, solid;
- T3 Organometallic substances;
- T4 Inorganic, liquid;
- T5 Inorganic, solid;
- T6 Liquid, used as pesticides;
- T7 Solid, used as pesticides;
- T8 Samples;
- T9 Other toxic substances;

TF Toxic substances, flammable:

- TF1 Liquid;
- TF2 Liquid, used as pesticides;
- TF3 Solid;

TS Toxic substances, self-heating, solid;

TW Toxic substances, which, in contact with water, emit flammable gases:

- TW1 Liquid;
- TW2 Solid;

TO Toxic substances, oxidizing:

- TO1 Liquid;
- TO2 Solid;

TC Toxic substances, corrosive:

- TC1 Organic, liquid;
- TC2 Organic, solid;
- TC3 Inorganic, liquid;
- TC4 Inorganic, solid;

TFC Toxic substances, flammable, corrosive.

Definitions

2.2.61.1.3 For the purposes of ADR:

LD_{50} (median lethal dose) for acute oral toxicity is the statistically derived single dose of a substance that can be expected to cause death within 14 days in 50 per cent of young adult albino rats when administered by the oral route. The LD_{50} value is expressed in terms of mass of test substance per mass of test animal (mg/kg);

LD_{50} for acute dermal toxicity is that dose of the substance which, administered by continuous contact for 24 hours with the bare skin of albino rabbits, is most likely to cause death within 14 days in one half of the animals tested. The number of animals tested shall be sufficient to give a statistically significant result and be in conformity with good pharmacological practice. The result is expressed in milligrams per kg body mass;

LC_{50} for acute toxicity on inhalation is that concentration of vapour, mist or dust which, administered by continuous inhalation to both male and female young adult albino rats for one hour, is most likely to cause death within 14 days in one half of the animals tested. A solid substance shall be tested if at least 10% (by mass) of its total mass is likely to be dust in a respirable range, e.g. the aerodynamic diameter of that particle-fraction is 10 µm or less. A liquid substance shall be tested if a mist is likely to be generated in a leakage of the transport containment. Both for solid and liquid substances more than 90% (by mass) of a specimen prepared for inhalation toxicity shall be in the respirable range as defined above. The result is expressed in milligrams per litre of air for dusts and mists or in millilitres per cubic metre of air (parts per million) for vapours.

Classification and assignment of packing groups

2.2.61.1.4 Substances of Class 6.1 shall be classified in three packing groups according to the degree of danger they present for carriage, as follows:

Packing group I:	highly toxic substances
Packing group II:	toxic substances
Packing group III:	slightly toxic substances.

2.2.61.1.5 Substances, mixtures, solutions and articles classified in Class 6.1 are listed in Table A of Chapter 3.2. The assignment of substances, mixtures and solutions not mentioned by name in Table A of Chapter 3.2 to the relevant entry of sub-section 2.2.61.3 and to the relevant packing group in accordance with the provisions of Chapter 2.1, shall be made according to the following criteria in 2.2.61.1.6 to 2.2.61.1.11.

2.2.61.1.6 To assess the degree of toxicity, account shall be taken of human experience of instances of accidental poisoning, as well as special properties possessed by any individual substances: liquid state, high volatility, any special likelihood of cutaneous absorption, and special biological effects.

2.2.61.1.7 In the absence of observations on humans, the degree of toxicity shall be assessed using the available data from animal experiments in accordance with the table below:

	Packing group	Oral toxicity LD_{50} (mg/kg)	Dermal toxicity LD_{50} (mg/kg)	Toxicity on inhalation of dusts and mists LC_{50} (mg/l)
Highly toxic	I	≤ 5	≤ 40	≤ 0.5
Toxic	II	> 5-50	> 40 - 200	> 0.5-2
Slightly toxic	III [a]	solids: > 50-200 liquids: > 50-500	> 200 - 1000	> 2-10

[a] *Tear gas substances shall be included in packing group II even if data concerning their toxicity correspond to packing group III criteria.*

2.2.61.1.7.1 Where a substance exhibits different degrees of toxicity for two or more kinds of exposure, it shall be classified under the highest such degree of toxicity.

2.2.61.1.7.2 Substances meeting the criteria of Class 8 and with an inhalation toxicity of dusts and mists (LC_{50}) leading to packing group I shall only be accepted for an allocation to Class 6.1 if the toxicity through oral ingestion or dermal contact is at least in the range of packing groups I or II. Otherwise an assignment to Class 8 shall be made if appropriate (see 2.2.8.1.5).

2.2.61.1.7.3 The criteria for inhalation toxicity of dusts and mists are based on LC_{50} data relating to 1-hour exposure, and where such information is available it shall be used. However, where only LC_{50} data relating to 4-hour exposure are available, such figures can be multiplied by four and the product substituted in the above criteria, i.e. LC_{50} value multiplied by four (4 hour) is considered the equivalent of LC_{50} (1 hour).

Inhalation toxicity of vapours

2.2.61.1.8 Liquids giving off toxic vapours shall be classified into the following groups where "V" is the saturated vapour concentration (in ml/m^3 of air) (volatility) at 20 °C and standard atmospheric pressure:

	Packing group	
Highly toxic	I	Where V ≥ 10 LC_{50} and LC_{50} ≤ 1 000 ml/m^3
Toxic	II	Where V ≥ LC_{50} and LC_{50} ≤ 3 000 ml/m^3 and the criteria for packing group I are not met
Slightly toxic	III[a]	Where V ≥ 1/5 LC_{50} and LC_{50} ≤ 5 000 ml/m^3 and the criteria for packing groups I and II are not met

[a] *Tear gas substances shall be included in packing group II even if data concerning their toxicity correspond to packing group III criteria.*

These criteria for inhalation toxicity of vapours are based on LC_{50} data relating to 1-hour exposure, and where such information is available, it shall be used.

However, where only LC_{50} data relating to 4-hour exposure to the vapours are available, such figures can be multiplied by two and the product substituted in the above criteria, i.e. LC_{50} (4 hour) × 2 is considered the equivalent of LC_{50} (1 hour).

In this figure, the criteria are expressed in graphical form, as an aid to easy classification. However, due to approximations inherent in the use of graphs, substances falling on or near group borderlines shall be checked using numerical criteria.

GROUP BORDERLINES INHALATION TOXICITY OF VAPOURS

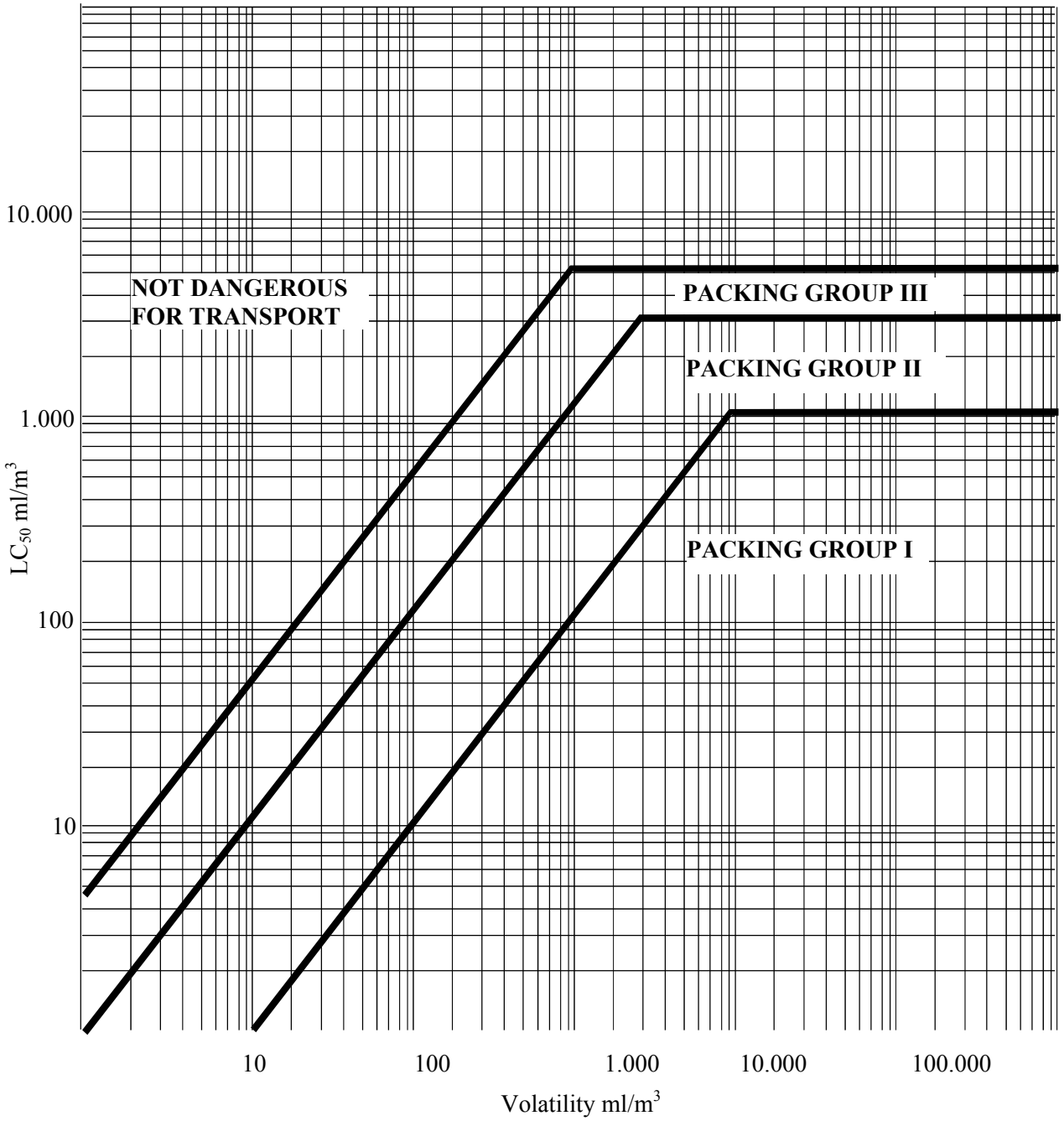

Mixtures of liquids

2.2.61.1.9 Mixtures of liquids which are toxic on inhalation shall be assigned to packing groups according to the following criteria:

2.2.61.1.9.1 If LC_{50} is known for each of the toxic substances constituting the mixture, the packing group may be determined as follows:

(a) calculation of the LC_{50} of the mixture:

$$LC_{50}\ (\text{mixture}) = \frac{1}{\sum_{i=1}^{1} \frac{f_i}{LC_{50i}}}$$

where f_i = molar fraction of constituent i of the mixture;

LC_{50i} = average lethal concentration of constituent i in ml/m^3.

(b) calculation of volatility of each mixture constituent:

$$V_i = P_i \times \frac{10^6}{101.3} (ml/m^3)$$

where P_i = partial pressure of constituent i in kPa at 20 °C and at standard atmospheric pressure.

(c) calculation of the ratio of volatility to LC_{50}:

$$R = \sum_{i=1}^{n} \frac{V_i}{LC_{50i}}$$

(d) the values calculated for LC_{50} (mixture) and R are then used to determine the packing group of the mixture:

Packing group I $R \geq 10$ and LC_{50} (mixture) $\leq 1\ 000\ ml/m^3$;

Packing group II $R \geq 1$ and LC_{50} (mixture) $\leq 3\ 000\ ml/m^3$, if the mixture does not meet the criteria for packing group I;

Packing group III $R \geq 1/5$ and LC_{50} (mixture) $\leq 5\ 000\ ml/m^3$, if the mixture does not meet the criteria of packing groups I or II.

2.2.61.1.9.2 In the absence of LC_{50} data on the toxic constituent substances, the mixture may be assigned to a group based on the following simplified threshold toxicity tests. When these threshold tests are used, the most restrictive group shall be determined and used for carrying the mixture.

2.2.61.1.9.3 A mixture is assigned to packing group I only if it meets both of the following criteria:

(a) A sample of the liquid mixture is vaporized and diluted with air to create a test atmosphere of 1000 ml/m^3 vaporized mixture in air. Ten albino rats (5 male and 5 female) are exposed to the test atmosphere for 1 hour and observed for 14 days. If five or more of the animals die within the 14-day observation period, the mixture is presumed to have an LC_{50} equal to or less than 1000 ml/m^3;

(b) A sample of vapour in equilibrium with the liquid mixture is diluted with 9 equal volumes of air to form a test atmosphere. Ten albino rats (5 male and 5 female) are exposed to the test atmosphere for 1 hour and observed for 14 days. If five or more of the animals die within the 14-day observation period, the mixture is presumed to have a volatility equal to or greater than 10 times the mixture LC_{50}.

2.2.61.1.9.4 A mixture is assigned to packing group II only if it meets both of the following criteria, and does not meet the criteria for packing group I:

(a) A sample of the liquid mixture is vaporized and diluted with air to create a test atmosphere of 3000 ml/m^3 vaporized mixture in air. Ten albino rats (5 male and 5 female) are exposed to the test atmosphere for 1 hour and observed for 14 days. If five or more of the animals die within the 14-day observation period, the mixture is presumed to have an LC_{50} equal to or less than 3000 ml/m^3;

(b) A sample of the vapour in equilibrium with the liquid mixture is used to form a test atmosphere. Ten albino rats (5 male and 5 female) are exposed to the test atmosphere for 1 hour and observed for 14 days. If five or more of the animals die within the 14-day observation period, the mixture is presumed to have a volatility equal to or greater than the mixture LC_{50}.

2.2.61.1.9.5 A mixture is assigned to packing group III only if it meets both of the following criteria, and does not meet the criteria for packing groups I or II:

(a) A sample of the liquid mixture is vaporized and diluted with air to create a test atmosphere of 5000 ml/m^3 vaporized mixture in air. Ten albino rats (5 male and 5 female) are exposed to the test atmosphere for 1 hour and observed for 14 days. If five or more of the animals die within the 14-day observation period, the mixture is presumed to have an LC_{50} equal to or less than 5000 ml/m^3;

(b) The vapour concentration (volatility) of the liquid mixture is measured and if the vapour concentration is equal to or greater than 1000 ml/m^3, the mixture is presumed to have a volatility equal to or greater than 1/5 the mixture LC_{50}.

Methods for determining oral and dermal toxicity of mixtures

2.2.61.1.10 When classifying and assigning the appropriate packing group to mixtures in Class 6.1 in accordance with the oral and dermal toxicity criteria (see 2.2.61.1.3), it is necessary to determine the acute LD_{50} of the mixture.

2.2.61.1.10.1 If a mixture contains only one active substance, and the LD_{50} of that constituent is known, in the absence of reliable acute oral and dermal toxicity data on the actual mixture to be carried, the oral or dermal LD_{50} may be obtained by the following method:

$$\text{LD}_{50}\ \text{value of preparation} = \frac{\text{LD}_{50}\ \text{value of active substance} \times 100}{\text{percentage of active substance by mass}}$$

2.2.61.1.10.2 If a mixture contains more than one active constituent, there are three possible approaches that may be used to determine the oral or dermal LD_{50} of the mixture. The preferred method is to obtain reliable acute oral and dermal toxicity data on the actual mixture to be carried. If reliable, accurate data is not available, then either of the following methods may be performed:

(a) Classify the formulation according to the most hazardous constituent of the mixture as if that constituent were present in the same concentration as the total concentration of all active constituents; or

(b) Apply the formula:

$$\frac{C_A}{T_A} + \frac{C_B}{T_B} + \ldots + \frac{C_Z}{T_Z} = \frac{100}{T_M}$$

where:

C = the percentage concentration of constituent A, B, ..., Z in the mixture;

T = the oral LD_{50} values of constituent A, B, ... Z;

T_M = the oral LD_{50} value of the mixture.

NOTE: *This formula can also be used for dermal toxicities provided that this information is available on the same species for all constituents. The use of this formula does not take into account any potentiation or protective phenomena.*

Classification of pesticides

2.2.61.1.11 All active pesticide substances and their preparations for which the LC_{50} and/or LD_{50} values are known and which are classified in Class 6.1 shall be classified under appropriate packing groups in accordance with the criteria given in 2.2.61.1.6 to 2.2.61.1.9. Substances and preparations which are characterized by subsidiary risks shall be classified according to the precedence of hazard Table in 2.1.3.10 with the assignment of appropriate packing groups.

2.2.61.1.11.1 If the oral or dermal LD_{50} value for a pesticide preparation is not known, but the LD_{50} value of its active substance(s) is known, the LD_{50} value for the preparation may be obtained by applying the procedures in 2.2.61.1.10.

NOTE*: LD_{50} toxicity data for a number of common pesticides may be obtained from the most current edition of the document "The WHO Recommended Classification of Pesticides by Hazard and Guidelines to Classification" available from the International Programme on Chemical Safety, World Health Organisation (WHO), 1211 Geneva 27, Switzerland. While that document may be used as a source of LD_{50} data for pesticides, its classification system shall not be used for purposes of transport classification of, or assignment of packing groups to, pesticides, which shall be in accordance with the requirements of ADR.*

2.2.61.1.11.2 The proper shipping name used in the carriage of the pesticide shall be selected on the basis of the active ingredient, of the physical state of the pesticide and any subsidiary risks it may exhibit (see 3.1.2).

2.2.61.1.12 If substances of Class 6.1, as a result of admixtures, come into categories of risk different from those to which the substances mentioned by name in Table A of Chapter 3.2 belong, these mixtures or solutions shall be assigned to the entries to which they belong on the basis of their actual degree of danger.

NOTE: *For the classification of solutions and mixtures (such as preparations and wastes), see also 2.1.3.*

2.2.61.1.13 On the basis of the criteria of 2.2.61.1.6 to 2.2.61.1.11, it may also be determined whether the nature of a solution or mixture mentioned by name or containing a substance mentioned by name is such that the solution or mixture is not subject to the requirements for this Class.

2.2.61.1.14 Substances, solutions and mixtures, with the exception of substances and preparations used as pesticides, which do not meet the criteria of Directives 67/548/EEC [2] or 88/379/EEC [3] as amended and which are not therefore classified as highly toxic, toxic or harmful according to these directives, as amended, may be considered as substances not belonging to Class 6.1.

2.2.61.2 ***Substances not accepted for carriage***

2.2.61.2.1 Chemically unstable substances of Class 6.1 shall not be accepted for carriage unless the necessary steps have been taken to prevent their dangerous decomposition or polymerization during carriage. To this end, it shall in particular be ensured that receptacles and tanks do not contain any substance(s) likely to cause such a reaction.

2.2.61.2.2 The following substances and mixtures shall not be accepted for carriage:

- Hydrogen cyanide, anhydrous or in solution, which do not meet the descriptions of UN Nos. 1051, 1613, 1614 and 3294;
- metal carbonyls, having a flash-point below 23 °C, other than UN Nos. 1259 NICKEL CARBONYL and 1994 IRON PENTACARBONYL;
- 2,3,7,8-TETRACHLORODIBENZO-P-DIOXINE (TCDD) in concentrations considered highly toxic in accordance with the criteria in 2.2.61.1.7;
- UN No. 2249 DICHLORODIMETHYL ETHER, SYMMETRICAL;
- preparations of phosphides without additives inhibiting the emission of toxic flammable gases.

---

[2] *Council Directive 67/548/EEC of 27 June 1967 on the approximation of laws, regulations and administrative provisions relating to the classification, packaging and labelling of dangerous substances (Official Journal of the European Communities No. L 196 of 16.08.1967, page 1).*

[3] *Council Directive 88/379/EEC on the approximation of laws, regulations and administrative provisions relating to the classification, packaging and labelling of dangerous preparations (Official Journal of the European Communities No. L 187 of 16.07.1988, page 14).*

2.2.61.3 *List of collective entries*

Toxic substances <u>without</u> subsidiary risk(s)

Organic	**liquid** [a]	**T1**	1583 CHLOROPICRIN MIXTURE, N.O.S. 1602 DYE, LIQUID, TOXIC, N.O.S., or 1602 DYE INTERMEDIATE, LIQUID, TOXIC, N.O.S. 1693 TEAR GAS SUBSTANCE, LIQUID, N.O.S. 1851 MEDICINE, LIQUID, TOXIC, N.O.S. 2206 ISOCYANATES, TOXIC, N.O.S. or 2206 ISOCYANATE SOLUTION, TOXIC, N.O.S. 3140 ALKALOIDS, LIQUID, N.O.S. or 3140 ALKALOID SALTS, LIQUID, N.O.S. 3142 DISINFECTANT, LIQUID, TOXIC, N.O.S. 3144 NICOTINE COMPOUND, LIQUID, N.O.S. or 3144 NICOTINE PREPARATION, LIQUID, N.O.S. 3172 TOXINS, EXTRACTED FROM LIVING SOURCES, LIQUID, N.O.S. 3276 NITRILES, TOXIC, LIQUID, N.O.S 3278 ORGANOPHOSPHORUS COMPOUND, TOXIC, LIQUID, N.O.S. 3381 TOXIC BY INHALATION LIQUID, N.O.S. with an inhalation toxicity lower than or equal to 200 ml/m^3 and saturated vapour concentration greater than or equal to 500 LC_{50} 3382 TOXIC BY INHALATION LIQUID, N.O.S. with an inhalation toxicity lower than or equal to 1000 ml/m^3 and saturated vapour concentration greater than or equal to 10 LC_{50} 2810 TOXIC LIQUID, ORGANIC, N.O.S.
	solid [a, b]	**T2**	1544 ALKALOIDS, SOLID, N.O.S. or 1544 ALKALOID SALTS, SOLID, N.O.S. 1601 DISINFECTANT, SOLID, TOXIC, N.O.S. 1655 NICOTINE COMPOUND, SOLID, N.O.S., or 1655 NICOTINE PREPARATION, SOLID, N.O.S. 3448 TEAR GAS SUBSTANCE, SOLID, N.O.S. 3143 DYE, SOLID, TOXIC, N.O.S. or 3143 DYE INTERMEDIATE, SOLID, TOXIC, N.O.S. 3462 TOXINS, EXTRACTED FROM LIVING SOURCES, SOLID, N.O.S. 3249 MEDICINE, SOLID, TOXIC, N.O.S. 3464 ORGANOPHOSPHORUS COMPOUND, TOXIC, SOLID, N.O.S. 3439 NITRILES, TOXIC, SOLID, N.O.S. 2811 TOXIC SOLID, ORGANIC, N.O.S.
Organometallic [c, d]		**T3**	2026 PHENYLMERCURIC COMPOUND, N.O.S. 2788 ORGANOTIN COMPOUND, LIQUID, N.O.S. 3146 ORGANOTIN COMPOUND, SOLID, N.O.S. 3280 ORGANOARSENIC COMPOUND, LIQUID, N.O.S. 3465 ORGANOARSENIC COMPOUND, SOLID, N.O.S. 3281 METAL CARBONYLS, LIQUID, N.O.S. 3466 METAL CARBONYLS, SOLID, N.O.S. 3282 ORGANOMETALLIC COMPOUND, TOXIC, LIQUID, N.O.S. 3467 ORGANOMETALLIC COMPOUND, TOXIC, SOLID, N.O.S.

(cont'd on next page)

[a] *Substances and preparations containing alkaloids or nicotine used as pesticides shall be classified under UN No. 2588 PESTICIDES, SOLID, TOXIC, N.O.S., UN No. 2902 PESTICIDES, LIQUID, TOXIC, N.O.S. or UN No. 2903 PESTICIDES, LIQUID, TOXIC, FLAMMABLE, N.O.S.*

[b] *Active substances and triturations or mixtures of substances intended for laboratories and experiments and for the manufacture of pharmaceutical products with other substances shall be classified according to their toxicity (see 2.2.61.1.7 to 2.2.61.1.11).*

[c] *Self-heating substances, slightly toxic and spontaneously combustible organometallic compounds, are substances of Class 4.2.*

[d] *Water-reactive substances, slightly toxic, and water-reactive organometallic compounds, are substances of Class 4.3.*

2.2.61.3 *List of collective entries (cont'd)*

Toxic substances <u>without</u> subsidiary risk(s) *(cont'd)*

Inorganic	**liquid** [e]	**T4**	1556 ARSENIC COMPOUND, LIQUID, N.O.S., inorganic including: Arsenates, n.o.s., Arsenites, n.o.s.; and Arsenic sulphides, n.o.s. 1935 CYANIDE SOLUTION, N.O.S. 2024 MERCURY COMPOUND, LIQUID, N.O.S. 3141 ANTIMONY COMPOUND, INORGANIC, LIQUID, N.O.S. 3440 SELENIUM COMPOUND, LIQUID, N.O.S. 3381 TOXIC BY INHALATION LIQUID, N.O.S. with an inhalation toxicity lower than or equal to 200 ml/m^3 and saturated vapour concentration greater than or equal to 500 LC_{50} 3382 TOXIC BY INHALATION LIQUID, N.O.S. with an inhalation toxicity lower than or equal to 1000 ml/m^3 and saturated vapour concentration greater than or equal to 10 LC_{50} 3287 TOXIC LIQUID, INORGANIC, N.O.S.
	solids [f, g]	**T5**	1549 ANTIMONY COMPOUND, INORGANIC, SOLID, N.O.S 1557 ARSENIC COMPOUND, SOLID, N.O.S., including: Arsenates, n.o.s.; Arsenites, n.o.s.; and Arsenic sulphides, n.o.s. 1564 BARIUM COMPOUND, N.O.S. 1566 BERYLLIUM COMPOUND, N.O.S. 1588 CYANIDES, INORGANIC, SOLID, N.O.S. 1707 THALLIUM COMPOUND, N.O.S. 2025 MERCURY COMPOUND, SOLID, N.O.S. 2291 LEAD COMPOUND, SOLUBLE, N.O.S. 2570 CADMIUM COMPOUND 2630 SELENATES or 2630 SELENITES 2856 FLUOROSILICATES, N.O.S. 3283 SELENIUM COMPOUND, SOLID, N.O.S. 3284 TELLURIUM COMPOUND, N.O.S. 3285 VANADIUM COMPOUND, N.O.S. 3288 TOXIC SOLID, INORGANIC, N.O.S.
Pesticides	**liquid**[h]	**T6**	2992 CARBAMATE PESTICIDE, LIQUID, TOXIC 2994 ARSENICAL PESTICIDE, LIQUID, TOXIC 2996 ORGANOCHLORINE PESTICIDE, LIQUID, TOXIC 2998 TRIAZINE PESTICIDE, LIQUID, TOXIC 3006 THIOCARBAMATE PESTICIDE, LIQUID, TOXIC 3010 COPPER BASED PESTICIDE, LIQUID, TOXIC 3012 MERCURY BASED PESTICIDE, LIQUID, TOXIC 3014 SUBSTITUTED NITROPHENOL PESTICIDE, LIQUID, TOXIC 3016 BIPYRIDILIUM PESTICIDE, LIQUID, TOXIC 3018 ORGANOPHOSPHORUS PESTICIDE, LIQUID, TOXIC 3020 ORGANOTIN PESTICIDE, LIQUID, TOXIC 3026 COUMARIN DERIVATIVE PESTICIDE, LIQUID, TOXIC 3348 PHENOXYACETIC ACID DERIVATIVE PESTICIDE, LIQUID, TOXIC 3352 PYRETHROID PESTICIDE, LIQUID, TOXIC 2902 PESTICIDE, LIQUID, TOXIC, N.O.S.

(cont'd on next page)

[e] *Mercury fulminate, wetted with not less than 20% water, or mixture of alcohol and water by mass is a substance of Class 1, UN No. 0135.*

[f] *Ferricyanides, ferrocyanides, alkaline thiocyanates and ammonium thiocyanates are not subject to the provisions of ADR.*

[g] *Lead salts and lead pigments which, when mixed in a ratio of 1:1,000 with 0.07M hydrochloric acid and stirred for one hour at a temperature of 23 °C ± 2 °C, exhibit a solubility of 5% or less, are not subject to the provisions of ADR.*

[h] *Articles impregnated with this pesticide, such as fibreboard plates, paper strips, cotton-wool balls, sheets of plastics material, in hermetically closed wrappings, are not subject to the provisions of ADR.*

2.2.61.3 *List of collective entries (cont'd)*

Toxic substances <u>without</u> subsidiary risk(s) *(cont'd)*

Pesticides *(cont'd)*	**Solid**[h]	**T7**	2757 CARBAMATE PESTICIDE, SOLID, TOXIC 2759 ARSENICAL PESTICIDE, SOLID, TOXIC 2761 ORGANOCHLORINE PESTICIDE, SOLID, TOXIC 2763 TRIAZINE PESTICIDE, SOLID, TOXIC 2771 THIOCARBAMATE PESTICIDE, SOLID, TOXIC 2775 COPPER BASED PESTICIDE, SOLID, TOXIC 2777 MERCURY BASED PESTICIDE, SOLID, TOXIC 2779 SUBSTITUTED NITROPHENOL PESTICIDE, SOLID, TOXIC 2781 BIPYRIDILIUM PESTICIDE, SOLID, TOXIC 2783 ORGANOPHOSPHORUS PESTICIDE, SOLID, TOXIC 2786 ORGANOTIN PESTICIDE, SOLID, TOXIC 3027 COUMARIN DERIVATIVE PESTICIDE, SOLID, TOXIC 3048 ALUMINIUM PHOSPHIDE PESTICIDE 3345 PHENOXYACETIC ACID DERIVATIVE PESTICIDE, SOLID, TOXIC 3349 PYRETHROID PESTICIDE, SOLID, TOXIC 2588 PESTICIDE, SOLID, TOXIC, N.O.S.
Samples		**T8**	3315 CHEMICAL SAMPLE, TOXIC
Other toxic substances [i]		**T9**	3243 SOLIDS CONTAINING TOXIC LIQUID, N.O.S.

Toxic substances <u>with</u> subsidiary risk(s)

Flammable TF	**Liquid** [j, k]	**TF1**	3071 MERCAPTANS, LIQUID, TOXIC, FLAMMABLE, N.O.S. or 3071 MERCAPTAN MIXTURE, LIQUID, TOXIC, FLAMMABLE, N.O.S. 3080 ISOCYANATES, TOXIC, FLAMMABLE, N.O.S. or 3080 ISOCYANATE SOLUTION, TOXIC, FLAMMABLE, N.O.S. 3275 NITRILES, TOXIC, FLAMMABLE, N.O.S. 3279 ORGANOPHOSPHORUS COMPOUND, TOXIC, FLAMMABLE, N.O.S. 3383 TOXIC BY INHALATION LIQUID, FLAMMABLE, N.O.S. with an inhalation toxicity lower than or equal to 200 ml/m^3 and saturated vapour concentration greater than or equal to 500 LC_{50} 3384 TOXIC BY INHALATION LIQUID, FLAMMABLE, N.O.S. with an inhalation toxicity lower than or equal to 1000 ml/m^3 and saturated vapour concentration greater than or equal to 10 LC_{50} 2929 TOXIC LIQUID, FLAMMABLE, ORGANIC, N.O.S.

(cont'd on next page)

[h] *Articles impregnated with this pesticide, such as fibreboard plates, paper strips, cotton-wool balls, sheets of plastics material, in hermetically closed wrappings, are not subject to the provisions of ADR.*

[i] *Mixtures of solids which are not subject to the provisions of ADR and of toxic liquids may be carried under UN No. 3243 without first applying the classification criteria of Class 6.1, provided there is no free liquid visible at the time the substance is loaded or at the time the packaging, container or transport unit is closed. Each packaging shall correspond to a design type that has passed a leakproofness test at the packing group II level. This entry shall not be used for solids containing a packing group I liquid.*

[j] *Highly toxic or toxic, flammable liquids having a flash-point below 23 °C excluding substances which are highly toxic on inhalation, i.e. UN Nos. 1051, 1092, 1098, 1143, 1163, 1182, 1185, 1238, 1239, 1244, 1251, 1259, 1613, 1614, 1695, 1994, 2334, 2382, 2407, 2438, 2480, 2482, 2484, 2485, 2606, 2929, 3279 and 3294 are substances of Class 3.*

[k] *Flammable liquids, slightly toxic, with the exception of substances and preparations used as pesticides, having a flash-point between 23 °C and 61 °C inclusive, are substances of Class 3.*

2.2.61.3 *List of collective entries (cont'd)*

Toxic substances with subsidiary risk(s) (cont'd)

Flammable TF *(cont'd)*	**pesticides, liquid (flash-point not less than 23 °C)**	**TF2**	2991 CARBAMATE PESTICIDE, LIQUID, TOXIC, FLAMMABLE 2993 ARSENICAL PESTICIDE, LIQUID, TOXIC, FLAMMABLE 2995 ORGANOCHLORINE PESTICIDE, LIQUID, TOXIC, FLAMMABLE 2997 TRIAZINE PESTICIDE, LIQUID, TOXIC, FLAMMABLE 3005 THIOCARBAMATE PESTICIDE, LIQUID, TOXIC, FLAMMABLE 3009 COPPER BASED PESTICIDE, LIQUID, TOXIC, FLAMMABLE 3011 MERCURY BASED PESTICIDE, LIQUID, TOXIC, FLAMMABLE 3013 SUBSTITUTED NITROPHENOL PESTICIDE, LIQUID, TOXIC, FLAMMABLE 3015 BIPYRIDILIUM PESTICIDE, LIQUID, TOXIC, FLAMMABLE 3017 ORGANOPHOSPHORUS PESTICIDE, LIQUID, TOXIC, FLAMMABLE 3019 ORGANOTIN PESTICIDE, LIQUID, TOXIC, FLAMMABLE 3025 COUMARIN DERIVATIVE PESTICIDE, LIQUID, TOXIC, FLAMMABLE 3347 PHENOXYACETIC ACID DERIVATIVE PESTICIDE, LIQUID, TOXIC, FLAMMABLE 3351 PYRETHROID PESTICIDE, LIQUID, TOXIC, FLAMMABLE 2903 PESTICIDE, LIQUID, TOXIC, FLAMMABLE, N.O.S.
	solid	**TF3**	1700 TEAR GAS CANDLES 2930 TOXIC SOLID, FLAMMABLE, ORGANIC, N.O.S.
Solid, self-heating [c] **TS**			3124 TOXIC SOLID, SELF-HEATING, N.O.S.
Water-reactive [d] **TW**	**liquid**	**TW1**	3385 TOXIC BY INHALATION LIQUID, WATER-REACTIVE, N.O.S. with an inhalation toxicity lower than or equal to 200 ml/m^3 and saturated vapour concentration greater than or equal to 500 LC_{50} 3386 TOXIC BY INHALATION LIQUID, WATER-REACTIVE, N.O.S. with an inhalation toxicity lower than or equal to 1000 ml/m^3 and saturated vapour concentration greater than or equal to 10 LC_{50} 3123 TOXIC LIQUID, WATER-REACTIVE, N.O.S.
	solid [n]	**TW2**	3125 TOXIC SOLID, WATER-REACTIVE, N.O.S.
Oxidizing [l] **TO**	**liquid**	**TO1**	3387 TOXIC BY INHALATION LIQUID, OXIDIZING, N.O.S. with an inhalation toxicity lower than or equal to 200 ml/m^3 and saturated vapour concentration greater than or equal to 500 LC_{50} 3388 TOXIC BY INHALATION LIQUID, OXIDIZING, N.O.S. with an inhalation toxicity lower than or equal to 1000 ml/m^3 and saturated vapour concentration greater than or equal to 10 LC_{50} 3122 TOXIC LIQUID, OXIDIZING, N.O.S.
	solid	**TO2**	3086 TOXIC SOLID, OXIDIZING, N.O.S.
Corro-sive [m] **TC** — **organic**	**liquid**	**TC1**	3277 CHLOROFORMATES, TOXIC, CORROSIVE, N.O.S. 3361 CHLOROSILANES, TOXIC, CORROSIVE, N.O.S. 3389 TOXIC BY INHALATION LIQUID, CORROSIVE, N.O.S. with an inhalation toxicity lower than or equal to 200 ml/m^3 and saturated vapour concentration greater than or equal to 500 LC_{50} 3390 TOXIC BY INHALATION LIQUID, CORROSIVE, N.O.S. with an inhalation toxicity lower than or equal to 1000 ml/m^3 and saturated vapour concentration greater than or equal to 10 LC_{50} 2927 TOXIC LIQUID, CORROSIVE, ORGANIC, N.O.S.

(cont'd on next page)

[c] *Self-heating substances, slightly toxic and spontaneously combustible organometallic compounds, are substances of Class 4.2.*

[d] *Water-reactive substances, slightly toxic, and water-reactive organometallic compounds, are substances of Class 4.3.*

[l] *Oxidizing substances, slightly toxic, are substances of Class 5.1.*

[m] *Substances slightly toxic and slightly corrosive, are substances of Class 8.*

[n] *Metal phosphides assigned to UN Nos. 1360, 1397, 1432, 1714, 2011 and 2013 are substances of Class 4.3.*

2.2.61.3 *List of collective entries (cont'd)*

Toxic substances with subsidiary risk(s) (cont'd)

Corrosive [m] TC *(cont'd)*					
	organic *(cont'd)*				
		solid	**TC2**	2928	TOXIC SOLID, CORROSIVE, ORGANIC, N.O.S.
		liquid	**TC3**	3389	TOXIC BY INHALATION LIQUID, CORROSIVE, N.O.S. with an inhalation toxicity lower than or equal to 200 ml/m^3 and saturated vapour concentration greater than or equal to 500 LC_{50}
				3390	TOXIC BY INHALATION LIQUID, CORROSIVE, N.O.S. with an inhalation toxicity lower than or equal to 1000 ml/m^3 and saturated vapour concentration greater than or equal to 10 LC_{50}
	inorganic			3289	TOXIC LIQUID, CORROSIVE, INORGANIC, N.O.S.
		solid	**TC4**	3290	TOXIC SOLID, CORROSIVE, INORGANIC, N.O.S.
Flammable, corrosive TFC				2742	CHLOROFORMATES, TOXIC, CORROSIVE, FLAMMABLE, N.O.S.
				3362	CHLOROSILANES, TOXIC, CORROSIVE, FLAMMABLE, N.O.S.
					(No other collective entry available; if need be, classification under a collective entry with a classification code to be determined according to the table of precedence of hazards in 2.1.3.10)

[m] *Substances slightly toxic and slightly corrosive, are substances of Class 8.*

2.2.62 Class 6.2 Infectious substances

2.2.62.1 *Criteria*

2.2.62.1.1 The heading of Class 6.2 covers infectious substances. For the purposes of ADR, infectious substances are substances which are known or are reasonably expected to contain pathogens. Pathogens are defined as micro-organisms (including bacteria, viruses, rickettsiae, parasites, fungi) and other agents such as prions, which can cause disease in humans or animals.

NOTE 1: *Genetically modified micro-organisms and organisms, biological products, diagnostic specimens and infected live animals shall be assigned to this Class if they meet the conditions for this Class.*

NOTE 2: *Toxins from plant, animal or bacterial sources which do not contain any infectious substances or organisms or which are not contained in them are substances of Class 6.1, UN Nos. 3172 or 3462.*

2.2.62.1.2 Substances of Class 6.2 are subdivided as follows:

I1 Infectious substances affecting humans;

I2 Infectious substances affecting animals only;

I3 Clinical waste;

I4 Diagnostic specimens.

Definitions

2.2.62.1.3 For the purposes of ADR,

"Biological products" are those products derived from living organisms which are manufactured and distributed in accordance with the requirements of appropriate national authorities, which may have special licensing requirements, and are used either for prevention, treatment, or diagnosis of disease in humans or animals, or for development, experimental or investigational purposes related thereto. They include, but are not limited to, finished or unfinished products such as vaccines;

"Cultures (laboratory stocks)*"* are the result of a process by which pathogens are amplified or propagated in order to generate high concentrations, thereby increasing the risk of infection when exposure to them occurs. This definition refers to cultures prepared for the intentional generation of pathogens and does not include cultures intended for diagnostic and clinical purposes;

"Genetically modified micro-organisms and organisms" are micro-organisms and organisms in which genetic material has been purposely altered through genetic engineering in a way that does not occur naturally;

"Medical or clinical wastes" are wastes derived from the medical treatment of animals or humans or from bio-research.

Classification

2.2.62.1.4 Infectious substances shall be classified in Class 6.2 and assigned to UN Nos. 2814, 2900 or 3373, as appropriate.

Infectious substances are divided into the following categories:

2.2.62.1.4.1 Category A: An infectious substance which is carried in a form that, when exposure to it occurs, is capable of causing permanent disability, life-threatening or fatal disease to humans or animals. Indicative examples of substances that meet these criteria are given in the table in this paragraph.

NOTE: *An exposure occurs when an infectious substance is released outside of the protective packaging, resulting in physical contact with humans or animals.*

(a) Infectious substances meeting these criteria which cause disease in humans or both in humans and animals shall be assigned to UN No. 2814. Infectious substances which cause disease only in animals shall be assigned to UN No. 2900;

(b) Assignment to UN No. 2814 or UN No. 2900 shall be based on the known medical history and symptoms of the source human or animal, endemic local conditions, or professional judgement concerning individual circumstances of the source human or animal.

NOTE 1: *The proper shipping name for UN No. 2814 is "INFECTIOUS SUBSTANCE, AFFECTING HUMANS". The proper shipping name for UN No. 2900 is "INFECTIOUS SUBSTANCE, AFFECTING ANIMALS only".*

NOTE 2: *The following table is not exhaustive. Infectious substances, including new or emerging pathogens, which do not appear in the table but which meet the same criteria shall be assigned to Category A. In addition, if there is doubt as to whether or not a substance meets the criteria it shall be included in Category A.*

NOTE 3: *In the following table, the micro-organisms written in italics are bacteria, mycoplasmas, rickettsia or fungi.*

INDICATIVE EXAMPLES OF INFECTIOUS SUBSTANCES INCLUDED IN CATEGORY A IN ANY FORM UNLESS OTHERWISE INDICATED (2.2.62.1.4.1)	
UN Number and name	**Micro-organism**
UN No. 2814 Infectious substances affecting humans	*Bacillus anthracis (cultures only)* *Brucella abortus (cultures only)* *Brucella melitensis (cultures only)* *Brucella suis (cultures only)* *Burkholderia mallei - Pseudomonas mallei* – Glanders *(cultures only)* *Burkholderia pseudomallei – Pseudomonas pseudomallei (cultures only)* *Chlamydia psittaci* - avian strains (cultures only) *Clostridium botulinum (cultures only)* *Coccidioides immitis (cultures only)* *Coxiella burnetii (cultures only)* Crimean-Congo hemorrhagic fever virus Dengue virus (cultures only) Eastern equine encephalitis virus (cultures only) *Escherichia coli*, verotoxigenic (cultures only) Ebola virus Flexal virus *Francisella tularensis (cultures only)* Guanarito virus Hantaan virus Hantaviruses causing hantavirus pulmonary syndrome Hendra virus Hepatitis B virus (cultures only) Herpes B virus (cultures only) Human immunodeficiency virus (cultures only) Highly pathogenic avian influenza virus (cultures only) Japanese Encephalitis virus (cultures only) Junin virus Kyasanur Forest disease virus Lassa virus Machupo virus Marburg virus Monkeypox virus *Mycobacterium tuberculosis (cultures only)* Nipah virus Omsk hemorrhagic fever virus Poliovirus (cultures only) Rabies virus *Rickettsia prowazekii (cultures only)* *Rickettsia rickettsii* (cultures only) Rift Valley fever virus Russian spring-summer encephalitis virus (cultures only) Sabia virus *Shigella dysenteriae type 1 (cultures only)* Tick-borne encephalitis virus (cultures only)

INDICATIVE EXAMPLES OF INFECTIOUS SUBSTANCES INCLUDED IN CATEGORY A IN ANY FORM UNLESS OTHERWISE INDICATED (2.2.62.1.4.1)	
UN Number and name	**Micro-organism**
UN No. 2814 Infectious substances affecting humans **(cont'd)**	Variola virus Venezuelan equine encephalitis virus West Nile virus (cultures only) Yellow fever virus (cultures only) *Yersinia pestis* (cultures only)
UN No. 2900 Infectious substances affecting animals only	African horse sickness virus African swine fever virus Avian paramyxovirus Type 1 - Newcastle disease virus Bluetongue virus Classical swine fever virus Foot and mouth disease virus Lumpy skin disease virus *Mycoplasma mycoides* - Contagious bovine pleuropneumonia Peste des petits ruminants virus Rinderpest virus Sheep-pox virus Goatpox virus Swine vesicular disease virus Vesicular stomatitis virus

2.2.62.1.4.2 Category B: An infectious substance which does not meet the criteria for inclusion in Category A. Infectious substances in Category B shall be assigned to UN No. 3373 except that cultures, as defined in 2.2.62.1.3, shall be assigned to UN No. 2814 or UN No. 2900 as appropriate.

NOTE: *The proper shipping name of UN No. 3373 is "DIAGNOSTIC SPECIMENS" or "CLINICAL SPECIMENS."*

2.2.62.1.5 Substances which do not contain infectious substances or substances which are unlikely to cause disease in humans or animals are not subject to the provisions of ADR unless they meet the criteria for inclusion in another class.

2.2.62.1.6 Blood or blood components which have been collected for the purposes of transfusion or for the preparation of blood products to be used for transfusion or transplantation and any tissues or organs intended for use in transplantation are not subject to the provisions of ADR.

2.2.62.1.7 Substances for which there is a low probability that infectious substances are present, or where the concentration is at a level naturally encountered, are not subject to the provisions of ADR. Examples are: foodstuffs, water samples, living persons and substances which have been treated so that the pathogens have been neutralized or deactivated.

2.2.62.1.8 A live animal which has been intentionally infected and is known or suspected to contain an infectious substance shall only be carried under terms and conditions approved by the competent authority [4].

[4] *Such regulations are contained in, e.g. Directive 91/628/EEC (Official Journal of the European Communities No. L 340 of 11 December 1991, p. 17) and in the Recommendations of the Council of Europe (Ministerial Committee) on the carriage of certain animal species.*

2.2.62.1.9 *Biological products*

For the purposes of ADR, biological products are divided into the following groups:

(a) those which are manufactured and packaged in accordance with the requirements of appropriate national authorities and carried for the purposes of final packaging or distribution, and use for personal health care by medical professionals or individuals. Substances in this group are not subject to the provisions of ADR;

(b) those which do not fall under paragraph (a) and are known or reasonably believed to contain infectious substances and which meet the criteria for inclusion in Category A or Category B. Substances in this group shall be assigned to UN Nos. 2814, 2900 or 3373, as appropriate.

***NOTE**: Some licensed biological products may present a biohazard only in certain parts of the world. In that case, competent authorities may require these biological products to be in compliance with local requirements for infectious substances or may impose other restrictions.*

2.2.62.1.10 *Genetically modified micro-organisms and organisms*

Genetically modified micro-organisms not meeting the definition of infectious substance shall be classified according to section 2.2.9.

2.2.62.1.11 *Medical or clinical wastes*

2.2.62.1.11.1 Medical or clinical wastes containing Category A infectious substances or containing Category B infectious substances in cultures shall be assigned to UN No. 2814 or UN No. 2900 as appropriate. Medical or clinical wastes containing infectious substances in Category B, other than cultures, shall be assigned to UN No. 3291.

2.2.62.1.11.2 Medical or clinical wastes which are reasonably believed to have a low probability of containing infectious substances shall be assigned to UN No. 3291.

***NOTE:** The proper shipping name for UN No. 3291 is "CLINICAL WASTE, UNSPECIFIED, N.O.S." or "(BIO) MEDICAL WASTE, N.O.S". or "REGULATED MEDICAL WASTE, N.O.S.".*

2.2.62.1.11.3 Decontaminated medical or clinical wastes which previously contained infectious substances are not subject to the provisions of ADR unless they meet the criteria for inclusion in another class.

2.2.62.1.11.4 Medical or clinical wastes assigned to UN No. 3291 are assigned to packing group II.

2.2.62.2 *Substances not accepted for carriage*

Live vertebrate or invertebrate animals shall not be used to carry an infectious agent unless the agent cannot be carried by other means or unless this carriage has been approved by the competent authority (see 2.2.62.1.8).

2.2.62.3 *List of collective entries*

Effects on humans	**I1**	2814 INFECTIOUS SUBSTANCE, AFFECTING HUMANS
Effects on animals only	**I2**	2900 INFECTIOUS SUBSTANCE, AFFECTING ANIMALS only
Clinical waste	**I3**	3291 CLINICAL WASTE, UNSPECIFIED, N.O.S. or 3291 (BIO) MEDICAL WASTE, N.O.S. or 3291 REGULATED MEDICAL WASTE, N.O.S.
Diagnostic specimens	**I4**	3373 DIAGNOSTIC SPECIMENS or 3373 CLINICAL SPECIMENS

2.2.7 Class 7 Radioactive material

2.2.7.1 *Definition of Class 7*

2.2.7.1.1 *Radioactive material* means any material containing radionuclides where both the activity concentration and the total activity in the consignment exceed the values specified in 2.2.7.7.2.1 to 2.2.7.7.2.6.

2.2.7.1.2 The following radioactive materials are not included in Class 7 for the purposes of ADR:

(a) Radioactive material that is an integral part of the means of transport;

(b) Radioactive material moved within an establishment which is subject to appropriate safety regulations in force in the establishment and where the movement does not involve public roads or railways;

(c) Radioactive material implanted or incorporated into a person or live animal for diagnosis or treatment;

(d) Radioactive material in consumer products which have received regulatory approval, following their sale to the end user;

(e) Natural material and ores containing naturally occurring radionuclides which are either in their natural state, or have only been processed for purposes other than for extraction of the radionuclides, and which are not intended to be processed for use of these radionuclides provided the activity concentration of the material does not exceed 10 times the values specified in 2.2.7.7.2;

(f) Non-radioactive solid objects with radioactive substances present on any surfaces in quantities not in excess of the limit set out in the definition for "contamination" in 2.2.7.2.

2.2.7.2 *Definitions*

A_1 and A_2

A_1 means the activity value of special form radioactive material which is listed in Table 2.2.7.7.2.1 or derived in 2.2.7.7.2 and is used to determine the activity limits for the requirements of ADR.

A_2 means the activity value of radioactive material, other than special form radioactive material, which is listed in Table 2.2.7.7.2.1 or derived in 2.2.7.7.2 and is used to determine the activity limits for the requirements of ADR.

Approval

Multilateral approval means approval by the relevant competent authority both of the country of origin of the design or shipment and of each country through or into which the consignment is to be carried.

Unilateral approval means an approval of a design which is required to be given by the competent authority of the country of origin of the design only. If the country of origin is not a Contracting Party to ADR, the approval shall require validation by the competent authority of the first country Contracting Party to ADR reached by the consignment (see 6.4.22.6).

Confinement system means the assembly of fissile material and packaging components specified by the designer and agreed to by the competent authority as intended to preserve criticality safety.

Containment system means the assembly of components of the packaging specified by the designer as intended to retain the radioactive material during carriage.
Contamination:

Contamination means the presence of a radioactive substance on a surface in quantities in excess of 0.4 Bq/cm^2 for beta and gamma emitters and low toxicity alpha emitters, or 0.04 Bq/cm^2 for all other alpha emitters.

Non-fixed contamination means contamination that can be removed from a surface during routine conditions of carriage.

Fixed contamination means contamination other than non-fixed contamination.

Criticality safety index (CSI) assigned to a package, overpack or container containing fissile material means a number which is used to provide control over the accumulation of packages, overpacks or containers containing fissile material.

Design means the description of special form radioactive material, low dispersible radioactive material, package or packaging which enables such an item to be fully identified. The description may include specifications, engineering drawings, reports demonstrating compliance with regulatory requirements, and other relevant documentation.

Exclusive use means the sole use, by a single consignor, of a vehicle or of a large container, in respect of which all initial, intermediate and final loading and unloading is carried out in accordance with the directions of the consignor or consignee.

Fissile material means uranium-233, uranium-235, plutonium-239, plutonium-241, or any combination of these radionuclides. Excepted from this definition is:

(a) Natural uranium or depleted uranium which is unirradiated, and

(b) Natural uranium or depleted uranium which has been irradiated in thermal reactors only.

Large container means a container which is not a small container according to the definitions of this Sub-section.

Low dispersible radioactive material means either a solid radioactive material or a solid radioactive material in a sealed capsule, that has limited dispersibility and is not in powder form.

***NOTE**: Low dispersible radioactive material may be carried by air in Type B(U) or B(M) packages in quantities as authorised for the package design as specified in the certificate of approval. This definition is included here since such packages carrying low dispersible radioactive material may also be carried by road.*

Low specific activity (LSA) material, see 2.2.7.3.

Low toxicity alpha emitters are: natural uranium; depleted uranium; natural thorium; uranium-235 or uranium-238; thorium-232; thorium-228 and thorium-230 when contained in ores or physical and chemical concentrates; or alpha emitters with a half-life of less than 10 days.

Maximum normal operating pressure means the maximum pressure above atmospheric pressure at mean sea-level that would develop in the containment system in a period of one year under the conditions of temperature and solar radiation corresponding to environmental conditions in the absence of venting, external cooling by an ancillary system, or operational controls during carriage.

Package in the case of radioactive material means the packaging with its radioactive contents as presented for carriage. The types of packages covered by ADR, which are subject to the activity limits and material restrictions of 2.2.7.7 and meet the corresponding requirements, are:

(a) Excepted package;

(b) Industrial package Type 1 (Type IP-1 package);

(c) Industrial package Type 2 (Type IP-2 package);

(d) Industrial package Type 3 (Type IP-3 package);

(e) Type A package;

(f) Type B(U) package;

(g) Type B(M) package;

(h) Type C package.

Packages containing fissile material or uranium hexafluoride are subject to additional requirements (see 2.2.7.7.1.7 and 2.2.7.7.1.8).

***NOTE**: For "packages" for other dangerous goods see definitions under 1.2.1.*

Packaging in the case of radioactive material means the assembly of components necessary to enclose the radioactive contents completely. It may, in particular, consist of one or more receptacles, absorbent materials, spacing structures, radiation shielding and service equipment for filling, emptying, venting and pressure relief; devices for cooling, absorbing mechanical shocks, handling and tie-down, thermal insulation; and service devices integral to the package. The packaging may be a box, drum or similar receptacle, or may also be a container, tank or intermediate bulk container (IBC).

***NOTE**: For "packagings" for other dangerous goods see definitions under 1.2.1*

Radiation level means the corresponding dose rate expressed in millisieverts per hour.

Radioactive contents mean the radioactive material together with any contaminated or activated solids, liquids, and gases within the packaging.

Shipment means the specific movement of a consignment from origin to destination.

Small container means a container which has either any overall outer dimension less than 1.5 m, or an internal volume of not more than 3 m^3.

Special form radioactive material, see 2.2.7.4.1.

Specific activity of a radionuclide means the activity per unit mass of that nuclide. The specific activity of a material shall mean the activity per unit mass or volume of the material in which the radionuclides are essentially uniformly distributed.

Surface contaminated object (SCO), see 2.2.7.5.

Transport index (TI) assigned to a package, overpack or container, or to unpackaged LSA-I or SCO-I, means a number which is used to provide control over radiation exposure.
Unirradiated thorium means thorium containing not more than 10^{-7} g of uranium-233 per gram of thorium-232.

Unirradiated uranium means uranium containing not more than 2×10^3 Bq of plutonium per gram of uranium-235, not more than 9×10^6 Bq of fission products per gram of uranium-235 and not more than 5×10^{-3} g of uranium-236 per gram of uranium-235.

Uranium - natural, depleted, enriched means the following:

Natural uranium means chemically separated uranium containing the naturally occurring distribution of uranium isotopes (approximately 99.28% uranium-238, and 0.72% uranium-235 by mass). *Depleted uranium* means uranium containing a lesser mass percentage of uranium-235 than in natural uranium. *Enriched uranium* means uranium containing a greater mass percentage of uranium-235 than 0.72%. In all cases, a very small mass percentage of uranium-234 is present.

2.2.7.3 ***Low specific activity (LSA) material, determination of groups***

2.2.7.3.1 Radioactive material which by its nature has a limited specific activity, or radioactive material for which limits of estimated average specific activity apply, is termed low specific activity or LSA material. External shielding materials surrounding the LSA material shall not be considered in determining the estimated average specific activity.

2.2.7.3.2 LSA material shall be in one of three groups:

(a) LSA-I

(i) uranium and thorium ores and concentrates of such ores, and other ores containing naturally occurring radionuclides which are intended to be processed for the use of these radionuclides;

(ii) solid unirradiated natural uranium or depleted uranium or natural thorium or their solid or liquid compounds or mixtures;

(iii) radioactive material for which the A_2 value is unlimited, excluding fissile material in quantities not excepted under 6.4.11.2; or

(iv) other radioactive material in which the activity is distributed throughout and the estimated average specific activity does not exceed 30 times the values for activity concentration specified in 2.2.7.7.2.1 to 2.2.7.7.2.6, excluding fissile material in quantities not excepted under 6.4.11.2.

(b) LSA-II

(i) water with tritium concentration up to 0.8 TBq/l; or

(ii) other material in which the activity is distributed throughout and the estimated average specific activity does not exceed 10^{-4} A_2/g for solids and gases, and 10^{-5} A_2/g for liquids;

(c) LSA-III - Solids (e.g. consolidated wastes, activated materials), excluding powders, in which:

(i) the radioactive material is distributed throughout a solid or a collection of solid objects, or is essentially uniformly distributed in a solid compact binding agent (such as concrete, bitumen, ceramic, etc.);

(ii) the radioactive material is relatively insoluble, or it is intrinsically contained in a relatively insoluble matrix, so that, even under loss of packaging, the loss of radioactive material per package by leaching when placed in water for seven days would not exceed 0.1 A_2; and

(iii) the estimated average specific activity of the solid, excluding any shielding material, does not exceed 2×10^{-3} A_2/g.

2.2.7.3.3 LSA-III material shall be a solid of such a nature that if the entire contents of a package were subjected to the test specified in 2.2.7.3.4 the activity in the water would not exceed 0.1 A_2.

2.2.7.3.4 LSA-III material shall be tested as follows:

A solid material sample representing the entire contents of the package shall be immersed for 7 days in water at ambient temperature. The volume of water to be used in the test shall be sufficient to ensure that at the end of the 7 day test period the free volume of the unabsorbed and unreacted water remaining shall be at least 10% of the volume of the solid test sample itself. The water shall have an initial pH of 6-8 and a maximum conductivity of 1 mS/m at 20 °C. The total activity of the free volume of water shall be measured following the 7 day immersion of the test sample.

2.2.7.3.5 Demonstration of compliance with the performance standards in 2.2.7.3.4 shall be in accordance with 6.4.12.1 and 6.4.12.2.

2.2.7.4 ***Requirements for special form radioactive material***

2.2.7.4.1 *Special form radioactive material* means either:

(a) An indispersible solid radioactive material; or

(b) A sealed capsule containing radioactive material that shall be so manufactured that it can be opened only by destroying the capsule.

Special form radioactive material shall have at least one dimension not less than 5 mm.

2.2.7.4.2 Special form radioactive material shall be of such a nature or shall be so designed that if it is subjected to the tests specified in 2.2.7.4.4 to 2.2.7.4.8, it shall meet the following requirements:

(a) It would not break or shatter under the impact, percussion and bending tests 2.2.7.4.5 (a)(b)(c), 2.2.7.4.6 (a) as applicable;

(b) It would not melt or disperse in the applicable heat test 2.2.7.4.5 (d) or 2.2.7.4.6 (b) as applicable; and

(c) The activity in the water from the leaching tests specified in 2.2.7.4.7 and 2.2.7.4.8 would not exceed 2 kBq; or alternatively for sealed sources, the leakage rate for the volumetric leakage assessment test specified in ISO 9978:1992 "Radiation Protection - Sealed Radioactive Sources - Leakage Test Methods", would not exceed the applicable acceptance threshold acceptable to the competent authority.

2.2.7.4.3 Demonstration of compliance with the performance standards in 2.2.7.4.2 shall be in accordance with 6.4.12.1 and 6.4.12.2.

2.2.7.4.4 Specimens that comprise or simulate special form radioactive material shall be subjected to the impact test, the percussion test, the bending test, and the heat test specified in 2.2.7.4.5 or alternative tests as authorized in 2.2.7.4.6. A different specimen may be used for each of the tests. Following each test, a leaching assessment or volumetric leakage test shall be performed on the specimen by a method no less sensitive than the methods given in 2.2.7.4.7 for indispersible solid material or 2.2.7.4.8 for encapsulated material.

2.2.7.4.5 The relevant test methods are:

(a) Impact test: The specimen shall drop onto the target from a height of 9 m. The target shall be as defined in 6.4.14;

(b) Percussion test: The specimen shall be placed on a sheet of lead which is supported by a smooth solid surface and struck by the flat face of a mild steel bar so as to cause an impact equivalent to that resulting from a free drop of 1.4 kg through 1 m. The lower part of the bar shall be 25 mm in diameter with the edges rounded off to a radius of (3.0 ± 0.3) mm. The lead, of hardness number 3.5 to 4.5 on the Vickers scale and not more than 25 mm thick, shall cover an area greater than that covered by the specimen. A fresh surface of lead shall be used for each impact. The bar shall strike the specimen so as to cause maximum damage;

(c) Bending test: The test shall apply only to long, slender sources with both a minimum length of 10 cm and a length to minimum width ratio of not less than 10. The specimen shall be rigidly clamped in a horizontal position so that one half of its length protrudes from the face of the clamp. The orientation of the specimen shall be such that the specimen will suffer maximum damage when its free end is struck by the flat face of a steel bar. The bar shall strike the specimen so as to cause an impact equivalent to that resulting from a free vertical drop of 1.4 kg through 1 m. The lower part of the bar shall be 25 mm in diameter with the edges rounded off to a radius of (3.0 ± 0.3) mm;

(d) Heat test: The specimen shall be heated in air to a temperature of 800°C and held at that temperature for a period of 10 minutes and shall then be allowed to cool.

2.2.7.4.6 Specimens that comprise or simulate radioactive material enclosed in a sealed capsule may be excepted from:

(a) The tests prescribed in 2.2.7.4.5 (a) and 2.2.7.4.5 (b) provided the mass of the special form radioactive material is less than 200 g and they are alternatively subjected to the Class 4 impact test prescribed in ISO 2919:1980 "Radiation protection - Sealed radioactive sources – General requirements and classification"; and

(b) The test prescribed in 2.2.7.4.5 (d) provided they are alternatively subjected to the Class 6 temperature test specified in ISO 2919:1980 " Radiation protection - Sealed radioactive sources – General requirements and classification ".

2.2.7.4.7 For specimens which comprise or simulate indispersible solid material, a leaching assessment shall be performed as follows:

(a) The specimen shall be immersed for 7 days in water at ambient temperature. The volume of water to be used in the test shall be sufficient to ensure that at the end of the 7 day test period the free volume of the unabsorbed and unreacted water remaining shall be at least 10% of the volume of the solid test sample itself. The water shall have an initial pH of 6-8 and a maximum conductivity of 1 mS/m at 20 °C;

(b) The water with specimen shall then be heated to a temperature of (50 ± 5) °C and maintained at this temperature for 4 hours;

(c) The activity of the water shall then be determined;

(d) The specimen shall then be kept for at least 7 days in still air at not less than 30 °C and relative humidity not less than 90%;

(e) The specimen shall then be immersed in water of the same specification as in (a) above and the water with the specimen heated to (50 ± 5) °C and maintained at this temperature for 4 hours;

(f) The activity of the water shall then be determined.

2.2.7.4.8 For specimens which comprise or simulate radioactive material enclosed in a sealed capsule, either a leaching assessment or a volumetric leakage assessment shall be performed as follows:

(a) The leaching assessment shall consist of the following steps:

(i) the specimen shall be immersed in water at ambient temperature. The water shall have an initial pH of 6-8 with a maximum conductivity of 1 mS/m at 20 °C;

(ii) the water and specimen shall be heated to a temperature of (50 ± 5) °C and maintained at this temperature for 4 hours;

(iii) the activity of the water shall then be determined;

(iv) the specimen shall then be kept for at least 7 days in still air at not less than 30 °C and relative humidity of not less than 90%;

(v) the process in (i), (ii) and (iii) shall be repeated;

(b) The alternative volumetric leakage assessment shall comprise any of the tests prescribed in ISO 9978:1992 "Radiation Protection - Sealed radioactive sources - Leakage test methods", which are acceptable to the competent authority.

2.2.7.5 ***Surface contaminated object (SCO), determination of groups***

Surface contaminated object (SCO) means a solid object which is not itself radioactive but which has radioactive material distributed on its surfaces. SCO is classified in one of two groups:

(a) SCO-I: A solid object on which:

(i) the non-fixed contamination on the accessible surface averaged over 300 cm^2 (or the area of the surface if less than 300 cm^2) does not exceed 4 Bq/cm^2 for beta and gamma emitters and low toxicity alpha emitters, or 0.4 Bq/cm^2 for all other alpha emitters; and

(ii) the fixed contamination on the accessible surface averaged over 300 cm^2 (or the area of the surface if less than 300 cm^2) does not exceed 4×10^4 Bq/cm^2 for beta and gamma emitters and low toxicity alpha emitters, or 4×10^3 Bq/cm^2 for all other alpha emitters; and

(iii) the non-fixed contamination plus the fixed contamination on the inaccessible surface averaged over 300 cm^2 (or the area of the surface if less than 300 cm^2) does not exceed 4×10^4 Bq/cm^2 for beta and gamma emitters and low toxicity alpha emitters, or 4×10^3 Bq/cm^2 for all other alpha emitters;

(b) SCO-II: A solid object on which either the fixed or non-fixed contamination on the surface exceeds the applicable limits specified for SCO-I in (a) above and on which:

(i) the non-fixed contamination on the accessible surface averaged over 300 cm^2 (or the area of the surface if less than 300 cm^2) does not exceed 400 Bq/cm^2 for beta and gamma emitters and low toxicity alpha emitters, or 40 Bq/cm^2 for all other alpha emitters; and

(ii) the fixed contamination on the accessible surface, averaged over 300 cm^2 (or the area of the surface if less than 300 cm^2) does not exceed 8×10^5 Bq/cm^2 for beta and gamma emitters and low toxicity alpha emitters, or 8×10^4 Bq/cm^2 for all other alpha emitters; and

(iii) the non-fixed contamination plus the fixed contamination on the inaccessible surface averaged over 300 cm^2 (or the area of the surface if less than 300 cm^2) does not exceed 8×10^5 Bq/cm^2 for beta and gamma emitters and low toxicity alpha emitters, or 8×10^4 Bq/cm^2 for all other alpha emitters.

2.2.7.6 ***Determination of transport index (TI) and criticality safety index (CSI)***

2.2.7.6.1 *Determination of transport index*

2.2.7.6.1.1 The transport index (TI) for a package, overpack or container, or for unpackaged LSA-I or SCO-I, shall be the number derived in accordance with the following procedure:

(a) Determine the maximum radiation level in units of millisieverts per hour (mSv/h) at a distance of 1 m from the external surfaces of the package, overpack, container, or unpackaged LSA-I and SCO-I. The value determined shall be multiplied by 100 and the resulting number is the transport index. For uranium and thorium ores and their concentrates, the maximum radiation level at any point 1 m from the external surface of the load may be taken as:

0.4 mSv/h for ores and physical concentrates of uranium and thorium;

0.3 mSv/h for chemical concentrates of thorium;

0.02 mSv/h for chemical concentrates of uranium, other than uranium hexafluoride;

(b) For tanks, containers and unpackaged LSA-I and SCO-I, the value determined in step (a) above shall be multiplied by the appropriate factor from Table 2.2.7.6.1.1;

(c) The value obtained in steps (a) and (b) above shall be rounded up to the first decimal place (e.g. 1.13 becomes 1.2), except that a value of 0.05 or less may be considered as zero.

Table 2.2.7.6.1.1

Multiplication factor for tanks, containers and unpackaged LSA-I and SCO-I

Size of load [a]	Multiplication factor
size of load ≤ 1 m^2	1
1 m^2 < size of load ≤ 5 m^2	2
5 m^2 < size of load ≤ 20 m^2	3
20 m^2 < size of load	10

[a] *Largest cross-sectional area of the load being measured.*

2.2.7.6.1.2 The transport index for each overpack, container, vehicle shall be determined as either the sum of the TIs of all the packages contained, or by direct measurement of radiation level, except in the case of non-rigid overpacks for which the transport index shall be determined only as the sum of the TIs of all the packages.

2.2.7.6.2 *Determination of criticality safety index (CSI)*

2.2.7.6.2.1 The criticality safety index (CSI) for packages containing fissile material shall be obtained by dividing the number 50 by the smaller of the two values of N derived in 6.4.11.11 and 6.4.11.12 (i.e. CSI = 50/N). The value of the criticality safety index may be zero, provided that an unlimited number of packages is subcritical (i.e. N is effectively equal to infinity in both cases).

2.2.7.6.2.2 The criticality safety index for each overpack or container shall be determined as the sum of the CSIs of all the packages contained. The same procedure shall be followed for determining the total sum of the CSIs in a consignment or aboard a vehicle.

2.2.7.7 ***Activity limits and material restrictions***

2.2.7.7.1 *Contents limits for packages*

2.2.7.7.1.1 General

The quantity of radioactive material in a package shall not exceed the relevant limits for the package type as specified below.

2.2.7.7.1.2 Excepted packages

2.2.7.7.1.2.1 For radioactive material other than articles manufactured of natural uranium, depleted uranium or natural thorium, an excepted package shall not contain activities greater than the following:

(a) Where the radioactive material is enclosed in or is included as a component part of an instrument or other manufactured article, such as a clock or electronic apparatus, the limits specified in columns 2 and 3 of Table 2.2.7.7.1.2.1 for each individual item and each package, respectively; and

(b) Where the radioactive material is not so enclosed in or is not included as a component of an instrument or other manufactured article, the package limits specified in column 4 of Table 2.2.7.7.1.2.1.

Table 2.2.7.7.1.2.1

ACTIVITY LIMITS FOR EXCEPTED PACKAGES

Physical state of contents	Instruments or article		Materials
	Item limits [a]	Package limits [a]	Package limits
Solids			
special form	10^{-2} A_1	A_1	10^{-3} A_1
other form	10^{-2} A_2	A_2	10^{-3} A_2
Liquids	10^{-3} A_2	10^{-1} A_2	10^{-4} A_2
Gases			
tritium	2×10^{-2} A_2	2×10^{-1} A_2	2×10^{-2} A_2
special form	10^{-3} A_1	10^{-2} A_1	10^{-3} A_1
other forms	10^{-3} A_2	10^{-2} A_2	10^{-3} A_2

[a] *For mixtures of radionuclides, see 2.2.7.7.2.4 to 2.2.7.7.2.6.*

2.2.7.7.1.2.2 For articles manufactured of natural uranium, depleted uranium or natural thorium, an excepted package may contain any quantity of such material provided that the outer surface of the uranium or thorium is enclosed in an inactive sheath made of metal or some other substantial material.

2.2.7.7.1.3 Industrial packages

The radioactive contents in a single package of LSA material or in a single package of SCO shall be so restricted that the radiation level specified in 4.1.9.2.1 shall not be exceeded, and the activity in a single package shall also be so restricted that the activity limits for a vehicle specified in 7.5.11, CV33 (2) shall not be exceeded.

2.2.7.7.1.4 Type A packages

2.2.7.7.1.4.1 Type A packages shall not contain activities greater than the following:

(a) For special form radioactive material - A_1; or

(b) For all other radioactive material - A_2.

2.2.7.7.1.4.2 For mixtures of radionuclides whose identities and respective activities are known, the following condition shall apply to the radioactive contents of a Type A package:

$$\sum_i \frac{B(i)}{A_1(i)} + \sum_j \frac{C(j)}{A_2(j)} \leq 1$$

where

B(i) is the activity of radionuclide i as special form radioactive material and $A_1(i)$ is the A_1 value for radionuclide i; and

C(j) is the activity of radionuclide j as other than special form radioactive material and $A_2(j)$ is the A_2 value for radionuclide j.

2.2.7.7.1.5 Type B(U) and Type B(M) packages

2.2.7.7.1.5.1 Type B(U) and Type B(M) packages shall not contain:

(a) Activities greater than those authorized for the package design;

(b) Radionuclides different from those authorized for the package design; or

(c) Contents in a form, or a physical or chemical state different from those authorized for the package design;

as specified in their certificates of approval.

2.2.7.7.1.6 Type C packages

***NOTE**: Type C packages may be transported by air carrying radioactive material in quantities exceeding either 3 000A_1 or 100 000A_2 ,whichever is the lower for special form radioactive material, or 3 000A_2 for all other radioactive material. Whilst Type C packages are not required for carriage of radioactive material by road in such quantities (Type B(U) or Type B(M) packages suffice), the following requirements are presented since such packages may also be carried by road.*

Type C packages shall not contain:

(a) Activities greater than those authorized for the package design;

(b) Radionuclides different from those authorized for the package design; or

(c) Contents in a form, or physical or chemical state different from those authorized for the package design;

as specified in their certificates of approval.

2.2.7.7.1.7 Packages containing fissile material

Packages containing fissile material shall not contain:

(a) A mass of fissile material different from that authorized for the package design;

(b) Any radionuclide or fissile material different from those authorized for the package design; or

(c) Contents in a form or physical or chemical state, or in a spatial arrangement, different from those authorized for the package design;

as specified in their certificates of approval where appropriate.

2.2.7.7.1.8 Packages containing uranium hexafluoride

The mass of uranium hexafluoride in a package shall not exceed a value that would lead to an ullage smaller than 5% at the maximum temperature of the package as specified for the plant systems where the package shall be used. The uranium hexafluoride shall be in solid form and the internal pressure of the package shall be below atmospheric pressure when presented for carriage.

2.2.7.7.2 *Activity levels*

2.2.7.7.2.1 The following basic values for individual radionuclides are given in Table 2.2.7.7.2.1:

(a) A_1 and A_2 in TBq;

(b) Activity concentration for exempt material in Bq/g; and

(c) Activity limits for exempt consignments in Bq.

Table 2.2.7.7.2.1

Radionuclide (atomic number)	A_1 (TBq)	A_2 (TBq)	Activity concentration for exempt material (Bq/g)	Activity limit for an exempt consignment (Bq)
Actinium (89)				
Ac-225 (a)	8×10^{-1}	6×10^{-3}	1×10^{1}	1×10^{4}
Ac-227 (a)	9×10^{-1}	9×10^{-5}	1×10^{-1}	1×10^{3}
Ac-228	6×10^{-1}	5×10^{-1}	1×10^{1}	1×10^{6}
Silver (47)				
Ag-105	2×10^{0}	2×10^{0}	1×10^{2}	1×10^{6}
Ag-108m (a)	7×10^{-1}	7×10^{-1}	1×10^{1} (b)	1×10^{6} (b)
Ag-110m (a)	4×10^{-1}	4×10^{-1}	1×10^{1}	1×10^{6}
Ag-111	2×10^{0}	6×10^{-1}	1×10^{3}	1×10^{6}
Aluminium (13)				
Al-26	1×10^{-1}	1×10^{-1}	1×10^{1}	1×10^{5}
Americium (95)				
Am-241	1×10^{1}	1×10^{-3}	1×10^{0}	1×10^{4}
Am-242m (a)	1×10^{1}	1×10^{-3}	1×10^{0} (b)	1×10^{4} (b)
Am-243 (a)	5×10^{0}	1×10^{-3}	1×10^{0} (b)	1×10^{3} (b)
Argon (18)				
Ar-37	4×10^{1}	4×10^{1}	1×10^{6}	1×10^{8}
Ar-39	4×10^{1}	2×10^{1}	1×10^{7}	1×10^{4}
Ar-41	3×10^{-1}	3×10^{-1}	1×10^{2}	1×10^{9}
Arsenic (33)				
As-72	3×10^{-1}	3×10^{-1}	1×10^{1}	1×10^{5}
As-73	4×10^{1}	4×10^{1}	1×10^{3}	1×10^{7}
As-74	1×10^{0}	9×10^{-1}	1×10^{1}	1×10^{6}
As-76	3×10^{-1}	3×10^{-1}	1×10^{2}	1×10^{5}
As-77	2×10^{1}	7×10^{-1}	1×10^{3}	1×10^{6}
Astatine (85)				
At-211 (a)	2×10^{1}	5×10^{-1}	1×10^{3}	1×10^{7}
Gold (79)				
Au-193	7×10^{0}	2×10^{0}	1×10^{2}	1×10^{7}

Radionuclide (atomic number)	A_1 (TBq)	A_2 (TBq)	Activity concentration for exempt material (Bq/g)	Activity limit for an exempt consignment (Bq)
Au-194	1×10^{0}	1×10^{0}	1×10^{1}	1×10^{6}
Au-195	1×10^{1}	6×10^{0}	1×10^{2}	1×10^{7}
Au-198	1×10^{0}	6×10^{-1}	1×10^{2}	1×10^{6}
Au-199	1×10^{1}	6×10^{-1}	1×10^{2}	1×10^{6}
Barium (56)				
Ba-131 (a)	2×10^{0}	2×10^{0}	1×10^{2}	1×10^{6}
Ba-133	3×10^{0}	3×10^{0}	1×10^{2}	1×10^{6}
Ba-133m	2×10^{1}	6×10^{-1}	1×10^{2}	1×10^{6}
Ba-140 (a)	5×10^{-1}	3×10^{-1}	1×10^{1} (b)	1×10^{5} (b)
Beryllium (4)				
Be-7	2×10^{1}	2×10^{1}	1×10^{3}	1×10^{7}
Be-10	4×10^{1}	6×10^{-1}	1×10^{4}	1×10^{6}
Bismuth (83)				
Bi-205	7×10^{-1}	7×10^{-1}	1×10^{1}	1×10^{6}
Bi-206	3×10^{-1}	3×10^{-1}	1×10^{1}	1×10^{5}
Bi-207	7×10^{-1}	7×10^{-1}	1×10^{1}	1×10^{6}
Bi-210	1×10^{0}	6×10^{-1}	1×10^{3}	1×10^{6}
Bi-210m (a)	6×10^{-1}	2×10^{-2}	1×10^{1}	1×10^{5}
Bi-212 (a)	7×10^{-1}	6×10^{-1}	1×10^{1} (b)	1×10^{5} (b)
Berkelium (97)				
Bk-247	8×10^{0}	8×10^{-4}	1×10^{0}	1×10^{4}
Bk-249 (a)	4×10^{1}	3×10^{-1}	1×10^{3}	1×10^{6}
Bromine (35)				
Br-76	4×10^{-1}	4×10^{-1}	1×10^{1}	1×10^{5}
Br-77	3×10^{0}	3×10^{0}	1×10^{2}	1×10^{6}
Br-82	4×10^{-1}	4×10^{-1}	1×10^{1}	1×10^{6}
Carbon (6)				
C-11	1×10^{0}	6×10^{-1}	1×10^{1}	1×10^{6}
C-14	4×10^{1}	3×10^{0}	1×10^{4}	1×10^{7}
Calcium (20)				
Ca-41	Unlimited	Unlimited	1×10^{5}	1×10^{7}

Radionuclide (atomic number)	A_1 (TBq)	A_2 (TBq)	Activity concentration for exempt material (Bq/g)	Activity limit for an exempt consignment (Bq)
Ca-45	4×10^{1}	1×10^{0}	1×10^{4}	1×10^{7}
Ca-47 (a)	3×10^{0}	3×10^{-1}	1×10^{1}	1×10^{6}
Cadmium (48)				
Cd-109	3×10^{1}	2×10^{0}	1×10^{4}	1×10^{6}
Cd-113m	4×10^{1}	5×10^{-1}	1×10^{3}	1×10^{6}
Cd-115 (a)	3×10^{0}	4×10^{-1}	1×10^{2}	1×10^{6}
Cd-115m	5×10^{-1}	5×10^{-1}	1×10^{3}	1×10^{6}
Cerium (58)				
Ce-139	7×10^{0}	2×10^{0}	1×10^{2}	1×10^{6}
Ce-141	2×10^{1}	6×10^{-1}	1×10^{2}	1×10^{7}
Ce-143	9×10^{-1}	6×10^{-1}	1×10^{2}	1×10^{6}
Ce-144 (a)	2×10^{-1}	2×10^{-1}	1×10^{2} (b)	1×10^{5} (b)
Californium (98)				
Cf-248	4×10^{1}	6×10^{-3}	1×10^{1}	1×10^{4}
Cf-249	3×10^{0}	8×10^{-4}	1×10^{0}	1×10^{3}
Cf-250	2×10^{1}	2×10^{-3}	1×10^{1}	1×10^{4}
Cf-251	7×10^{0}	7×10^{-4}	1×10^{0}	1×10^{3}
Cf-252	1×10^{-1}	3×10^{-3}	1×10^{1}	1×10^{4}
Cf-253 (a)	4×10^{1}	4×10^{-2}	1×10^{2}	1×10^{5}
Cf-254	1×10^{-3}	1×10^{-3}	1×10^{0}	1×10^{3}
Chlorine (17)				
Cl-36	1×10^{1}	6×10^{-1}	1×10^{4}	1×10^{6}
Cl-38	2×10^{-1}	2×10^{-1}	1×10^{1}	1×10^{5}
Curium (96)				
Cm-240	4×10^{1}	2×10^{-2}	1×10^{2}	1×10^{5}
Cm-241	2×10^{0}	1×10^{0}	1×10^{2}	1×10^{6}
Cm-242	4×10^{1}	1×10^{-2}	1×10^{2}	1×10^{5}
Cm-243	9×10^{0}	1×10^{-3}	1×10^{0}	1×10^{4}
Cm-244	2×10^{1}	2×10^{-3}	1×10^{1}	1×10^{4}
Cm-245	9×10^{0}	9×10^{-4}	1×10^{0}	1×10^{3}
Cm-246	9×10^{0}	9×10^{-4}	1×10^{0}	1×10^{3}

Radionuclide (atomic number)	A_1 (TBq)	A_2 (TBq)	Activity concentration for exempt material (Bq/g)	Activity limit for an exempt consignment (Bq)
Cm-247 (a)	3×10^{0}	1×10^{-3}	1×10^{0}	1×10^{4}
Cm-248	2×10^{-2}	3×10^{-4}	1×10^{0}	1×10^{3}
Cobalt (27)				
Co-55	5×10^{-1}	5×10^{-1}	1×10^{1}	1×10^{6}
Co-56	3×10^{-1}	3×10^{-1}	1×10^{1}	1×10^{5}
Co-57	1×10^{1}	1×10^{1}	1×10^{2}	1×10^{6}
Co-58	1×10^{0}	1×10^{0}	1×10^{1}	1×10^{6}
Co-58m	4×10^{1}	4×10^{1}	1×10^{4}	1×10^{7}
Co-60	4×10^{-1}	4×10^{-1}	1×10^{1}	1×10^{5}
Chromium (24)				
Cr-51	3×10^{1}	3×10^{1}	1×10^{3}	1×10^{7}
Caesium (55)				
Cs-129	4×10^{0}	4×10^{0}	1×10^{2}	1×10^{5}
Cs-131	3×10^{1}	3×10^{1}	1×10^{3}	1×10^{6}
Cs-132	1×10^{0}	1×10^{0}	1×10^{1}	1×10^{5}
Cs-134	7×10^{-1}	7×10^{-1}	1×10^{1}	1×10^{4}
Cs-134m	4×10^{1}	6×10^{-1}	1×10^{3}	1×10^{5}
Cs-135	4×10^{1}	1×10^{0}	1×10^{4}	1×10^{7}
Cs-136	5×10^{-1}	5×10^{-1}	1×10^{1}	1×10^{5}
Cs-137 (a)	2×10^{0}	6×10^{-1}	1×10^{1} (b)	1×10^{4} (b)
Copper (29)				
Cu-64	6×10^{0}	1×10^{0}	1×10^{2}	1×10^{6}
Cu-67	1×10^{1}	7×10^{-1}	1×10^{2}	1×10^{6}
Dysprosium (66)				
Dy-159	2×10^{1}	2×10^{1}	1×10^{3}	1×10^{7}
Dy-165	9×10^{-1}	6×10^{-1}	1×10^{3}	1×10^{6}
Dy-166 (a)	9×10^{-1}	3×10^{-1}	1×10^{3}	1×10^{6}
Erbium (68)				
Er-169	4×10^{1}	1×10^{0}	1×10^{4}	1×10^{7}
Er-171	8×10^{-1}	5×10^{-1}	1×10^{2}	1×10^{6}

Radionuclide (atomic number)	A_1 (TBq)	A_2 (TBq)	Activity concentration for exempt material (Bq/g)	Activity limit for an exempt consignment (Bq)
Europium (63)				
Eu-147	2×10^{0}	2×10^{0}	1×10^{2}	1×10^{6}
Eu-148	5×10^{-1}	5×10^{-1}	1×10^{1}	1×10^{6}
Eu-149	2×10^{1}	2×10^{1}	1×10^{2}	1×10^{7}
Eu-150(short lived)	2×10^{0}	7×10^{-1}	1×10^{3}	1×10^{6}
Eu-150(long lived)	7×10^{-1}	7×10^{-1}	1×10^{1}	1×10^{6}
Eu-152	1×10^{0}	1×10^{0}	1×10^{1}	1×10^{6}
Eu-152m	8×10^{-1}	8×10^{-1}	1×10^{2}	1×10^{6}
Eu-154	9×10^{-1}	6×10^{-1}	1×10^{1}	1×10^{6}
Eu-155	2×10^{1}	3×10^{0}	1×10^{2}	1×10^{7}
Eu-156	7×10^{-1}	7×10^{-1}	1×10^{1}	1×10^{6}
Fluorine (9)				
F-18	1×10^{0}	6×10^{-1}	1×10^{1}	1×10^{6}
Iron (26)				
Fe-52 (a)	3×10^{-1}	3×10^{-1}	1×10^{1}	1×10^{6}
Fe-55	4×10^{1}	4×10^{1}	1×10^{4}	1×10^{6}
Fe-59	9×10^{-1}	9×10^{-1}	1×10^{1}	1×10^{6}
Fe-60 (a)	4×10^{1}	2×10^{-1}	1×10^{2}	1×10^{5}
Gallium (31)				
Ga-67	7×10^{0}	3×10^{0}	1×10^{2}	1×10^{6}
Ga-68	5×10^{-1}	5×10^{-1}	1×10^{1}	1×10^{5}
Ga-72	4×10^{-1}	4×10^{-1}	1×10^{1}	1×10^{5}
Gadolinium (64)				
Gd-146 (a)	5×10^{-1}	5×10^{-1}	1×10^{1}	1×10^{6}
Gd-148	2×10^{1}	2×10^{-3}	1×10^{1}	1×10^{4}
Gd-153	1×10^{1}	9×10^{0}	1×10^{2}	1×10^{7}
Gd-159	3×10^{0}	6×10^{-1}	1×10^{3}	1×10^{6}
Germanium (32)				
Ge-68 (a)	5×10^{-1}	5×10^{-1}	1×10^{1}	1×10^{5}
Ge-71	4×10^{1}	4×10^{1}	1×10^{4}	1×10^{8}
Ge-77	3×10^{-1}	3×10^{-1}	1×10^{1}	1×10^{5}

Radionuclide (atomic number)	A_1 (TBq)	A_2 (TBq)	Activity concentration for exempt material (Bq/g)	Activity limit for an exempt consignment (Bq)
Hafnium (72)				
Hf-172 (a)	6×10^{-1}	6×10^{-1}	1×10^{1}	1×10^{6}
Hf-175	3×10^{0}	3×10^{0}	1×10^{2}	1×10^{6}
Hf-181	2×10^{0}	5×10^{-1}	1×10^{1}	1×10^{6}
Hf-182	Unlimited	Unlimited	1×10^{2}	1×10^{6}
Mercury (80)				
Hg-194 (a)	1×10^{0}	1×10^{0}	1×10^{1}	1×10^{6}
Hg-195m (a)	3×10^{0}	7×10^{-1}	1×10^{2}	1×10^{6}
Hg-197	2×10^{1}	1×10^{1}	1×10^{2}	1×10^{7}
Hg-197m	1×10^{1}	4×10^{-1}	1×10^{2}	1×10^{6}
Hg-203	5×10^{0}	1×10^{0}	1×10^{2}	1×10^{5}
Holmium (67)				
Ho-166	4×10^{-1}	4×10^{-1}	1×10^{3}	1×10^{5}
Ho-166m	6×10^{-1}	5×10^{-1}	1×10^{1}	1×10^{6}
Iodine (53)				
I-123	6×10^{0}	3×10^{0}	1×10^{2}	1×10^{7}
I-124	1×10^{0}	1×10^{0}	1×10^{1}	1×10^{6}
I-125	2×10^{1}	3×10^{0}	1×10^{3}	1×10^{6}
I-126	2×10^{0}	1×10^{0}	1×10^{2}	1×10^{6}
I-129	Unlimited	Unlimited	1×10^{2}	1×10^{5}
I-131	3×10^{0}	7×10^{-1}	1×10^{2}	1×10^{6}
I-132	4×10^{-1}	4×10^{-1}	1×10^{1}	1×10^{5}
I-133	7×10^{-1}	6×10^{-1}	1×10^{1}	1×10^{6}
I-134	3×10^{-1}	3×10^{-1}	1×10^{1}	1×10^{5}
I-135 (a)	6×10^{-1}	6×10^{-1}	1×10^{1}	1×10^{6}
Indium (49)				
In-111	3×10^{0}	3×10^{0}	1×10^{2}	1×10^{6}
In-113m	4×10^{0}	2×10^{0}	1×10^{2}	1×10^{6}
In-114m (a)	1×10^{1}	5×10^{-1}	1×10^{2}	1×10^{6}
In-115m	7×10^{0}	1×10^{0}	1×10^{2}	1×10^{6}

Radionuclide (atomic number)	A_1 (TBq)	A_2 (TBq)	Activity concentration for exempt material (Bq/g)	Activity limit for an exempt consignment (Bq)
Iridium (77)				
Ir-189 (a)	1×10^{1}	1×10^{1}	1×10^{2}	1×10^{7}
Ir-190	7×10^{-1}	7×10^{-1}	1×10^{1}	1×10^{6}
Ir-192	1×10^{0}(c)	6×10^{-1}	1×10^{1}	1×10^{4}
Ir-194	3×10^{-1}	3×10^{-1}	1×10^{2}	1×10^{5}
Potassium (19)				
K-40	9×10^{-1}	9×10^{-1}	1×10^{2}	1×10^{6}
K-42	2×10^{-1}	2×10^{-1}	1×10^{2}	1×10^{6}
K-43	7×10^{-1}	6×10^{-1}	1×10^{1}	1×10^{6}
Krypton (36)				
Kr-79	$4 \text{ x } 10^{0}$	$1 \text{ x } 10^{0}$	$1 \text{ x } 10^{3}$	$1 \text{ x } 10^{5}$
Kr-81	4×10^{1}	4×10^{1}	1×10^{4}	1×10^{7}
Kr-85	1×10^{1}	1×10^{1}	1×10^{5}	1×10^{4}
Kr-85m	8×10^{0}	3×10^{0}	1×10^{3}	1×10^{10}
Kr-87	2×10^{-1}	2×10^{-1}	1×10^{2}	1×10^{9}
Lanthanum (57)				
La-137	3×10^{1}	6×10^{0}	1×10^{3}	1×10^{7}
La-140	4×10^{-1}	4×10^{-1}	1×10^{1}	1×10^{5}
Lutetium (71)				
Lu-172	6×10^{-1}	6×10^{-1}	1×10^{1}	1×10^{6}
Lu-173	8×10^{0}	8×10^{0}	1×10^{2}	1×10^{7}
Lu-174	9×10^{0}	9×10^{0}	1×10^{2}	1×10^{7}
Lu-174m	2×10^{1}	1×10^{1}	1×10^{2}	1×10^{7}
Lu-177	3×10^{1}	7×10^{-1}	1×10^{3}	1×10^{7}
Magnesium (12)				
Mg-28 (a)	3×10^{-1}	3×10^{-1}	1×10^{1}	1×10^{5}
Manganese (25)				
Mn-52	3×10^{-1}	3×10^{-1}	1×10^{1}	1×10^{5}
Mn-53	Unlimited	Unlimited	1×10^{4}	1×10^{9}
Mn-54	1×10^{0}	1×10^{0}	1×10^{1}	1×10^{6}
Mn-56	3×10^{-1}	3×10^{-1}	1×10^{1}	1×10^{5}

Radionuclide (atomic number)	A_1 (TBq)	A_2 (TBq)	Activity concentration for exempt material (Bq/g)	Activity limit for an exempt consignment (Bq)
Molybdenum (42)				
Mo-93	4×10^{1}	2×10^{1}	1×10^{3}	1×10^{8}
Mo-99 (a)	1×10^{0}	6×10^{-1}	1×10^{2}	1×10^{6}
Nitrogen (7)				
N-13	9×10^{-1}	6×10^{-1}	1×10^{2}	1×10^{9}
Sodium (11)				
Na-22	5×10^{-1}	5×10^{-1}	1×10^{1}	1×10^{6}
Na-24	2×10^{-1}	2×10^{-1}	1×10^{1}	1×10^{5}
Niobium (41)				
Nb-93m	4×10^{1}	3×10^{1}	1×10^{4}	1×10^{7}
Nb-94	7×10^{-1}	7×10^{-1}	1×10^{1}	1×10^{6}
Nb-95	1×10^{0}	1×10^{0}	1×10^{1}	1×10^{6}
Nb-97	9×10^{-1}	6×10^{-1}	1×10^{1}	1×10^{6}
Neodymium (60)				
Nd-147	6×10^{0}	6×10^{-1}	1×10^{2}	1×10^{6}
Nd-149	6×10^{-1}	5×10^{-1}	1×10^{2}	1×10^{6}
Nickel (28)				
Ni-59	Unlimited	Unlimited	1×10^{4}	1×10^{8}
Ni-63	4×10^{1}	3×10^{1}	1×10^{5}	1×10^{8}
Ni-65	4×10^{-1}	4×10^{-1}	1×10^{1}	1×10^{6}
Neptunium (93)				
Np-235	4×10^{1}	4×10^{1}	1×10^{3}	1×10^{7}
Np-236(short-lived)	2×10^{1}	2×10^{0}	1×10^{3}	1×10^{7}
Np-236(long-lived)	9×10^{0}	2×10^{-2}	1×10^{2}	1×10^{5}
Np-237	2×10^{1}	2×10^{-3}	1×10^{0} (b)	1×10^{3} (b)
Np-239	7×10^{0}	4×10^{-1}	1×10^{2}	1×10^{7}
Osmium (76)				
Os-185	1×10^{0}	1×10^{0}	1×10^{1}	1×10^{6}
Os-191	1×10^{1}	2×10^{0}	1×10^{2}	1×10^{7}
Os-191m	4×10^{1}	3×10^{1}	1×10^{3}	1×10^{7}
Os-193	2×10^{0}	6×10^{-1}	1×10^{2}	1×10^{6}

Radionuclide (atomic number)	A_1 (TBq)	A_2 (TBq)	Activity concentration for exempt material (Bq/g)	Activity limit for an exempt consignment (Bq)
Os-194 (a)	3×10^{-1}	3×10^{-1}	1×10^{2}	1×10^{5}
Phosphorus (15)				
P-32	5×10^{-1}	5×10^{-1}	1×10^{3}	1×10^{5}
P-33	4×10^{1}	1×10^{0}	1×10^{5}	1×10^{8}
Protactinium (91)				
Pa-230 (a)	2×10^{0}	7×10^{-2}	1×10^{1}	1×10^{6}
Pa-231	4×10^{0}	4×10^{-4}	1×10^{0}	1×10^{3}
Pa-233	5×10^{0}	7×10^{-1}	1×10^{2}	1×10^{7}
Lead (82)				
Pb-201	1×10^{0}	1×10^{0}	1×10^{1}	1×10^{6}
Pb-202	4×10^{1}	2×10^{1}	1×10^{3}	1×10^{6}
Pb-203	4×10^{0}	3×10^{0}	1×10^{2}	1×10^{6}
Pb-205	Unlimited	Unlimited	1×10^{4}	1×10^{7}
Pb-210 (a)	1×10^{0}	5×10^{-2}	1×10^{1} (b)	1×10^{4} (b)
Pb-212 (a)	7×10^{-1}	2×10^{-1}	1×10^{1} (b)	1×10^{5} (b)
Palladium (46)				
Pd-103 (a)	4×10^{1}	4×10^{1}	1×10^{3}	1×10^{8}
Pd-107	Unlimited	Unlimited	1×10^{5}	1×10^{8}
Pd-109	2×10^{0}	5×10^{-1}	1×10^{3}	1×10^{6}
Promethium (61)				
Pm-143	3×10^{0}	3×10^{0}	1×10^{2}	1×10^{6}
Pm-144	7×10^{-1}	7×10^{-1}	1×10^{1}	1×10^{6}
Pm-145	3×10^{1}	1×10^{1}	1×10^{3}	1×10^{7}
Pm-147	4×10^{1}	2×10^{0}	1×10^{4}	1×10^{7}
Pm-148m (a)	8×10^{-1}	7×10^{-1}	1×10^{1}	1×10^{6}
Pm-149	2×10^{0}	6×10^{-1}	1×10^{3}	1×10^{6}
Pm-151	2×10^{0}	6×10^{-1}	1×10^{2}	1×10^{6}
Polonium (84)				
Po-210	4×10^{1}	2×10^{-2}	1×10^{1}	1×10^{4}
Praseodymium (59)				
Pr-142	4×10^{-1}	4×10^{-1}	1×10^{2}	1×10^{5}

Radionuclide (atomic number)	A_1 (TBq)	A_2 (TBq)	Activity concentration for exempt material (Bq/g)	Activity limit for an exempt consignment (Bq)
Pr-143	3×10^{0}	6×10^{-1}	1×10^{4}	1×10^{6}
Platinum (78)				
Pt-188 (a)	1×10^{0}	8×10^{-1}	1×10^{1}	1×10^{6}
Pt-191	4×10^{0}	3×10^{0}	1×10^{2}	1×10^{6}
Pt-193	4×10^{1}	4×10^{1}	1×10^{4}	1×10^{7}
Pt-193m	4×10^{1}	5×10^{-1}	1×10^{3}	1×10^{7}
Pt-195m	1×10^{1}	5×10^{-1}	1×10^{2}	1×10^{6}
Pt-197	2×10^{1}	6×10^{-1}	1×10^{3}	1×10^{6}
Pt-197m	1×10^{1}	6×10^{-1}	1×10^{2}	1×10^{6}
Plutonium (94)				
Pu-236	3×10^{1}	3×10^{-3}	1×10^{1}	1×10^{4}
Pu-237	2×10^{1}	2×10^{1}	1×10^{3}	1×10^{7}
Pu-238	1×10^{1}	1×10^{-3}	1×10^{0}	1×10^{4}
Pu-239	1×10^{1}	1×10^{-3}	1×10^{0}	1×10^{4}
Pu-240	1×10^{1}	1×10^{-3}	1×10^{0}	1×10^{3}
Pu-241 (a)	4×10^{1}	6×10^{-2}	1×10^{2}	1×10^{5}
Pu-242	1×10^{1}	1×10^{-3}	1×10^{0}	1×10^{4}
Pu-244 (a)	4×10^{-1}	1×10^{-3}	1×10^{0}	1×10^{4}
Radium (88)				
Ra-223 (a)	4×10^{-1}	7×10^{-3}	1×10^{2} (b)	1×10^{5} (b)
Ra-224 (a)	4×10^{-1}	2×10^{-2}	1×10^{1} (b)	1×10^{5} (b)
Ra-225 (a)	2×10^{-1}	4×10^{-3}	1×10^{2}	1×10^{5}
Ra-226 (a)	2×10^{-1}	3×10^{-3}	1×10^{1} (b)	1×10^{4} (b)
Ra-228 (a)	6×10^{-1}	2×10^{-2}	1×10^{1} (b)	1×10^{5} (b)
Rubidium (37)				
Rb-81	2×10^{0}	8×10^{-1}	1×10^{1}	1×10^{6}
Rb-83 (a)	2×10^{0}	2×10^{0}	1×10^{2}	1×10^{6}
Rb-84	1×10^{0}	1×10^{0}	1×10^{1}	1×10^{6}
Rb-86	5×10^{-1}	5×10^{-1}	1×10^{2}	1×10^{5}
Rb-87	Unlimited	Unlimited	1×10^{4}	1×10^{7}
Rb(nat)	Unlimited	Unlimited	1×10^{4}	1×10^{7}

Radionuclide (atomic number)	A_1 (TBq)	A_2 (TBq)	Activity concentration for exempt material (Bq/g)	Activity limit for an exempt consignment (Bq)
Rhenium (75)				
Re-184	1×10^{0}	1×10^{0}	1×10^{1}	1×10^{6}
Re-184m	3×10^{0}	1×10^{0}	1×10^{2}	1×10^{6}
Re-186	2×10^{0}	6×10^{-1}	1×10^{3}	1×10^{6}
Re-187	Unlimited	Unlimited	1×10^{6}	1×10^{9}
Re-188	4×10^{-1}	4×10^{-1}	1×10^{2}	1×10^{5}
Re-189 (a)	3×10^{0}	6×10^{-1}	1×10^{2}	1×10^{6}
Re(nat)	Unlimited	Unlimited	1×10^{6}	1×10^{9}
Rhodium (45)				
Rh-99	2×10^{0}	2×10^{0}	1×10^{1}	1×10^{6}
Rh-101	4×10^{0}	3×10^{0}	1×10^{2}	1×10^{7}
Rh-102	5×10^{-1}	5×10^{-1}	1×10^{1}	1×10^{6}
Rh-102m	2×10^{0}	2×10^{0}	1×10^{2}	1×10^{6}
Rh-103m	4×10^{1}	4×10^{1}	1×10^{4}	1×10^{8}
Rh-105	1×10^{1}	8×10^{-1}	1×10^{2}	1×10^{7}
Radon (86)				
Rn-222 (a)	3×10^{-1}	4×10^{-3}	1×10^{1} (b)	1×10^{8} (b)
Ruthenium (44)				
Ru-97	5×10^{0}	5×10^{0}	1×10^{2}	1×10^{7}
Ru-103 (a)	2×10^{0}	2×10^{0}	1×10^{2}	1×10^{6}
Ru-105	1×10^{0}	6×10^{-1}	1×10^{1}	1×10^{6}
Ru-106 (a)	2×10^{-1}	2×10^{-1}	1×10^{2} (b)	1×10^{5} (b)
Sulphur (16)				
S-35	4×10^{1}	3×10^{0}	1×10^{5}	1×10^{8}
Antimony (51)				
Sb-122	4×10^{-1}	4×10^{-1}	1×10^{2}	1×10^{4}
Sb-124	6×10^{-1}	6×10^{-1}	1×10^{1}	1×10^{6}
Sb-125	2×10^{0}	1×10^{0}	1×10^{2}	1×10^{6}
Sb-126	4×10^{-1}	4×10^{-1}	1×10^{1}	1×10^{5}
Scandium (21)				
Sc-44	5×10^{-1}	5×10^{-1}	1×10^{1}	1×10^{5}

Radionuclide (atomic number)	A_1 (TBq)	A_2 (TBq)	Activity concentration for exempt material (Bq/g)	Activity limit for an exempt consignment (Bq)
Sc-46	5×10^{-1}	5×10^{-1}	1×10^{1}	1×10^{6}
Sc-47	1×10^{1}	7×10^{-1}	1×10^{2}	1×10^{6}
Sc-48	3×10^{-1}	3×10^{-1}	1×10^{1}	1×10^{5}
Selenium (34)				
Se-75	3×10^{0}	3×10^{0}	1×10^{2}	1×10^{6}
Se-79	4×10^{1}	2×10^{0}	1×10^{4}	1×10^{7}
Silicon (14)				
Si-31	6×10^{-1}	6×10^{-1}	1×10^{3}	1×10^{6}
Si-32	4×10^{1}	5×10^{-1}	1×10^{3}	1×10^{6}
Samarium (62)				
Sm-145	1×10^{1}	1×10^{1}	1×10^{2}	1×10^{7}
Sm-147	Unlimited	Unlimited	1×10^{1}	1×10^{4}
Sm-151	4×10^{1}	1×10^{1}	1×10^{4}	1×10^{8}
Sm-153	9×10^{0}	6×10^{-1}	1×10^{2}	1×10^{6}
Tin (50)				
Sn-113 (a)	4×10^{0}	2×10^{0}	1×10^{3}	1×10^{7}
Sn-117m	7×10^{0}	4×10^{-1}	1×10^{2}	1×10^{6}
Sn-119m	4×10^{1}	3×10^{1}	1×10^{3}	1×10^{7}
Sn-121m (a)	4×10^{1}	9×10^{-1}	1×10^{3}	1×10^{7}
Sn-123	8×10^{-1}	6×10^{-1}	1×10^{3}	1×10^{6}
Sn-125	4×10^{-1}	4×10^{-1}	1×10^{2}	1×10^{5}
Sn-126 (a)	6×10^{-1}	4×10^{-1}	1×10^{1}	1×10^{5}
Strontium (38)				
Sr-82 (a)	2×10^{-1}	2×10^{-1}	1×10^{1}	1×10^{5}
Sr-85	2×10^{0}	2×10^{0}	1×10^{2}	1×10^{6}
Sr-85m	5×10^{0}	5×10^{0}	1×10^{2}	1×10^{7}
Sr-87m	3×10^{0}	3×10^{0}	1×10^{2}	1×10^{6}
Sr-89	6×10^{-1}	6×10^{-1}	1×10^{3}	1×10^{6}
Sr-90 (a)	3×10^{-1}	3×10^{-1}	1×10^{2} (b)	1×10^{4} (b)
Sr-91 (a)	3×10^{-1}	3×10^{-1}	1×10^{1}	1×10^{5}
Sr-92 (a)	1×10^{0}	3×10^{-1}	1×10^{1}	1×10^{6}

Radionuclide (atomic number)	A_1 (TBq)	A_2 (TBq)	Activity concentration for exempt material (Bq/g)	Activity limit for an exempt consignment (Bq)
Tritium (1)				
T(H-3)	4×10^{1}	4×10^{1}	1×10^{6}	1×10^{9}
Tantalum (73)				
Ta-178(long-lived)	1×10^{0}	8×10^{-1}	1×10^{1}	1×10^{6}
Ta-179	3×10^{1}	3×10^{1}	1×10^{3}	1×10^{7}
Ta-182	9×10^{-1}	5×10^{-1}	1×10^{1}	1×10^{4}
Terbium (65)				
Tb-157	4×10^{1}	4×10^{1}	1×10^{4}	1×10^{7}
Tb-158	1×10^{0}	1×10^{0}	1×10^{1}	1×10^{6}
Tb-160	1×10^{0}	6×10^{-1}	1×10^{1}	1×10^{6}
Technetium (43)				
Tc-95m (a)	2×10^{0}	2×10^{0}	1×10^{1}	1×10^{6}
Tc-96	4×10^{-1}	4×10^{-1}	1×10^{1}	1×10^{6}
Tc-96m (a)	4×10^{-1}	4×10^{-1}	1×10^{3}	1×10^{7}
Tc-97	Unlimited	Unlimited	1×10^{3}	1×10^{8}
Tc-97m	4×10^{1}	1×10^{0}	1×10^{3}	1×10^{7}
Tc-98	8×10^{-1}	7×10^{-1}	1×10^{1}	1×10^{6}
Tc-99	4×10^{1}	9×10^{-1}	1×10^{4}	1×10^{7}
Tc-99m	1×10^{1}	4×10^{0}	1×10^{2}	1×10^{7}
Tellurium (52)				
Te-121	2×10^{0}	2×10^{0}	1×10^{1}	1×10^{6}
Te-121m	5×10^{0}	3×10^{0}	1×10^{2}	1×10^{5}
Te-123m	8×10^{0}	1×10^{0}	1×10^{2}	1×10^{7}
Te-125m	2×10^{1}	9×10^{-1}	1×10^{3}	1×10^{7}
Te-127	2×10^{1}	7×10^{-1}	1×10^{3}	1×10^{6}
Te-127m (a)	2×10^{1}	5×10^{-1}	1×10^{3}	1×10^{7}
Te-129	7×10^{-1}	6×10^{-1}	1×10^{2}	1×10^{6}
Te-129m (a)	8×10^{-1}	4×10^{-1}	1×10^{3}	1×10^{6}
Te-131m (a)	7×10^{-1}	5×10^{-1}	1×10^{1}	1×10^{6}
Te-132 (a)	5×10^{-1}	4×10^{-1}	1×10^{2}	1×10^{7}

Radionuclide (atomic number)	A_1 (TBq)	A_2 (TBq)	Activity concentration for exempt material (Bq/g)	Activity limit for an exempt consignment (Bq)
Thorium (90)				
Th-227	1×10^{1}	5×10^{-3}	1×10^{1}	1×10^{4}
Th-228 (a)	5×10^{-1}	1×10^{-3}	1×10^{0} (b)	1×10^{4} (b)
Th-229	5×10^{0}	5×10^{-4}	1×10^{0} (b)	1×10^{3} (b)
Th-230	1×10^{1}	1×10^{-3}	1×10^{0}	1×10^{4}
Th-231	4×10^{1}	2×10^{-2}	1×10^{3}	1×10^{7}
Th-232	Unlimited	Unlimited	1×10^{1}	1×10^{4}
Th-234 (a)	3×10^{-1}	3×10^{-1}	1×10^{3} (b)	1×10^{5} (b)
Th(nat)	Unlimited	Unlimited	1×10^{0} (b)	1×10^{3} (b)
Titanium (22)				
Ti-44 (a)	5×10^{-1}	4×10^{-1}	1×10^{1}	1×10^{5}
Thallium (81)				
Tl-200	9×10^{-1}	9×10^{-1}	1×10^{1}	1×10^{6}
Tl-201	1×10^{1}	4×10^{0}	1×10^{2}	1×10^{6}
Tl-202	2×10^{0}	2×10^{0}	1×10^{2}	1×10^{6}
Tl-204	1×10^{1}	7×10^{-1}	1×10^{4}	1×10^{4}
Thulium (69)				
Tm-167	7×10^{0}	8×10^{-1}	1×10^{2}	1×10^{6}
Tm-170	3×10^{0}	6×10^{-1}	1×10^{3}	1×10^{6}
Tm-171	4×10^{1}	4×10^{1}	1×10^{4}	1×10^{8}
Uranium (92)				
U-230 (fast lung absorption) (a)(d)	4×10^{1}	1×10^{-1}	1×10^{1} (b)	1×10^{5} (b)
U-230 (medium lung absorption) (a)(e)	4×10^{1}	4×10^{-3}	1×10^{1}	1×10^{4}
U-230 (slow lung absorption) (a)(f)	3×10^{1}	3×10^{-3}	1×10^{1}	1×10^{4}
U-232 (fast lung absorption) (d)	4×10^{1}	1×10^{-2}	1×10^{0} (b)	1×10^{3} (b)
U-232 (medium lung absorption) (e)	4×10^{1}	7×10^{-3}	1×10^{1}	1×10^{4}
U-232 (slow lung absorption) (f)	1×10^{1}	1×10^{-3}	1×10^{1}	1×10^{4}
U-233 (fast lung absorption) (d)	4×10^{1}	9×10^{-2}	1×10^{1}	1×10^{4}
U-233 (medium lung absorption) (e)	4×10^{1}	2×10^{-2}	1×10^{2}	1×10^{5}
U-233 (slow lung absorption) (f)	4×10^{1}	6×10^{-3}	1×10^{1}	1×10^{5}
U-234 (fast lung absorption) (d)	4×10^{1}	9×10^{-2}	1×10^{1}	1×10^{4}

Radionuclide (atomic number)	A_1 (TBq)	A_2 (TBq)	Activity concentration for exempt material (Bq/g)	Activity limit for an exempt consignment (Bq)
U-234 (medium lung absorption) (e)	4×10^{1}	2×10^{-2}	1×10^{2}	1×10^{5}
U-234 (slow lung absorption) (f)	4×10^{1}	6×10^{-3}	1×10^{1}	1×10^{5}
U-235 (all lung absorption types) (a)(d)(e)(f)	Unlimited	Unlimited	1×10^{1} (b)	1×10^{4} (b)
U-236 (fast lung absorption) (d)	Unlimited	Unlimited	1×10^{1}	1×10^{4}
U-236 (medium lung absorption) (e)	4×10^{1}	2×10^{-2}	1×10^{2}	1×10^{5}
U-236 (slow lung absorption) (f)	4×10^{1}	6×10^{-3}	1×10^{1}	1×10^{4}
U-238 (all lung absorption types) (d)(e)(f)	Unlimited	Unlimited	1×10^{1} (b)	1×10^{4} (b)
U (nat)	Unlimited	Unlimited	1×10^{0} (b)	1×10^{3} (b)
U (enriched to 20% or less) (g)	Unlimited	Unlimited	1×10^{0}	1×10^{3}
U (dep)	Unlimited	Unlimited	1×10^{0}	1×10^{3}
Vanadium (23)				
V-48	4×10^{-1}	4×10^{-1}	1×10^{1}	1×10^{5}
V-49	4×10^{1}	4×10^{1}	1×10^{4}	1×10^{7}
Tungsten (74)				
W-178 (a)	9×10^{0}	5×10^{0}	1×10^{1}	1×10^{6}
W-181	3×10^{1}	3×10^{1}	1×10^{3}	1×10^{7}
W-185	4×10^{1}	8×10^{-1}	1×10^{4}	1×10^{7}
W-187	2×10^{0}	6×10^{-1}	1×10^{2}	1×10^{6}
W-188 (a)	4×10^{-1}	3×10^{-1}	1×10^{2}	1×10^{5}
Xenon (54)				
Xe-122 (a)	4×10^{-1}	4×10^{-1}	1×10^{2}	1×10^{9}
Xe-123	2×10^{0}	7×10^{-1}	1×10^{2}	1×10^{9}
Xe-127	4×10^{0}	2×10^{0}	1×10^{3}	1×10^{5}
Xe-131m	4×10^{1}	4×10^{1}	1×10^{4}	1×10^{4}
Xe-133	2×10^{1}	1×10^{1}	1×10^{3}	1×10^{4}
Xe-135	3×10^{0}	2×10^{0}	1×10^{3}	1×10^{10}
Yttrium (39)				
Y-87 (a)	1×10^{0}	1×10^{0}	1×10^{1}	1×10^{6}
Y-88	4×10^{-1}	4×10^{-1}	1×10^{1}	1×10^{6}

Radionuclide (atomic number)	A_1 (TBq)	A_2 (TBq)	Activity concentration for exempt material (Bq/g)	Activity limit for an exempt consignment (Bq)
Y-90	3×10^{-1}	3×10^{-1}	1×10^{3}	1×10^{5}
Y-91	6×10^{-1}	6×10^{-1}	1×10^{3}	1×10^{6}
Y-91m	2×10^{0}	2×10^{0}	1×10^{2}	1×10^{6}
Y-92	2×10^{-1}	2×10^{-1}	1×10^{2}	1×10^{5}
Y-93	3×10^{-1}	3×10^{-1}	1×10^{2}	1×10^{5}
Ytterbium (70)				
Yb-169	4×10^{0}	1×10^{0}	1×10^{2}	1×10^{7}
Yb-175	3×10^{1}	9×10^{-1}	1×10^{3}	1×10^{7}
Zinc (30)				
Zn-65	2×10^{0}	2×10^{0}	1×10^{1}	1×10^{6}
Zn-69	3×10^{0}	6×10^{-1}	1×10^{4}	1×10^{6}
Zn-69m (a)	3×10^{0}	6×10^{-1}	1×10^{2}	1×10^{6}
Zirconium (40)				
Zr-88	3×10^{0}	3×10^{0}	1×10^{2}	1×10^{6}
Zr-93	Unlimited	Unlimited	1×10^{3} (b)	1×10^{7} (b)
Zr-95 (a)	2×10^{0}	8×10^{-1}	1×10^{1}	1×10^{6}
Zr-97 (a)	4×10^{-1}	4×10^{-1}	1×10^{1} (b)	1×10^{5} (b)

(a) A_1 and/or A_2 values include contributions from daughter nuclides with half-lives less than 10 days.

(b) Parent nuclides and their progeny included in secular equilibrium are listed in the following:

Sr-90	Y-90
Zr-93	Nb-93m
Zr-97	Nb-97
Ru-106	Rh-106
Cs-137	Ba-137m
Ce-134	La-134
Ce-144	Pr-144
Ba-140	La-140
Bi-212	Tl-208 (0.36), Po-212 (0.64)
Pb-210	Bi-210, Po-210
Pb-212	Bi-212, Tl-208 (0.36), Po-212 (0.64)
Rn-220	Po-216
Rn-222	Po-218, Pb-214, Bi-214, Po-214
Ra-223	Rn-219, Po-215, Pb-211, Bi-211, Tl-207
Ra-224	Rn-220, Po-216, Pb-212, Bi-212, Tl-208 (0.36), Po-212 (0.64)

Ra-226	Rn-222, Po-218, Pb-214, Bi-214, Po-214, Pb-210, Bi-210, Po-210
Ra-228	Ac-228
Th-226	Ra-222, Rn-218, Po-214
Th-228	Ra-224, Rn-220, Po-216, Pb212, Bi-212, Tl208 (0.36), Po-212 (0.64)
Th-229	Ra-225, Ac-225, Fr-221, At-217, Bi-213, Po-213, Pb-209
Th-nat	Ra-228, Ac-228, Th-228, Ra-224, Rn-220, Po-216, Pb-212, Bi-212, l208 (0.36), Po-212 (0.64)
Th-234	Pa-234m
U-230	Th-226, Ra-222, Rn-218, Po-214
U-232	Th-228, Ra-224, Rn-220, Po-216, Pb-212, Bi-212, Tl-208 (0.36), Po-212 (0.64)
U-235	Th-231
U-238	Th-234, Pa-234m
U-nat	Th-234, Pa-234m, U-234, Th-230, Ra-226, Rn-222, Po-218, Pb-214, Bi-214, Po-214, Pb-210, Bi-210, Po-210
U-240	Np-240m
Np-237	Pa-233
Am-242m	Am-242
Am-243	Np-239

(c) The quantity may be determined from a measurement of the rate of decay or a measurement of the radiation level at a prescribed distance from the source.

(d) These values apply only to compounds of uranium that take the chemical form of UF_6, UO_2F_2 and $UO_2(NO_3)_2$ in both normal and accident conditions of carriage.

(e) These values apply only to compounds of uranium that take the chemical form of UO_3, UF_4, UCl_4 and hexavalent compounds in both normal and accident conditions of carriage.

(f) These values apply to all compounds of uranium other than those specified in (d) and (e) above.

(g) These values apply to unirradiated uranium only.

2.2.7.7.2.2 For individual radionuclides which are not listed in Table 2.2.7.7.2.1 the determination of the basic radionuclide values referred to in 2.2.7.7.2.1 shall require competent authority approval or, for international carriage, multilateral approval. Where the chemical form of each radionuclide is known, it is permissible to use the A_2 value related to its solubility class as recommended by the International Commission on Radiological Protection, if the chemical forms under both normal and accident conditions of carriage are taken into consideration. Alternatively, the radionuclide values in Table 2.2.7.7.2.2 may be used without obtaining competent authority approval.

Table 2.2.7.7.2.2

BASIC RADIONUCLIDE VALUES FOR UNKNOWN RADIONUCLIDES OR MIXTURES

Radioactive contents	A_1 TBq	A_2 TBq	Activity concentration for exempt material Bq/g	Activity limit for an exempt consignment Bq
Only beta or gamma emitting nuclides are known to be present	0.1	0.02	1×10^{1}	1×10^{4}
Only alpha emitting nuclides are known to be present	0.2	9×10^{-5}	1×10^{-1}	1×10^{3}
No relevant data are available	0.001	9×10^{-5}	1×10^{-1}	1×10^{3}

2.2.7.7.2.3 In the calculations of A_1 and A_2 for a radionuclide not in Table 2.2.7.7.2.1, a single radioactive decay chain in which the radionuclides are present in their naturally occurring proportions, and in which no daughter nuclide has a half-life either longer than 10 days or longer than that of the parent nuclide, shall be considered as a single radionuclide; and the activity to be taken into account and the A_1 or A_2 value to be applied shall be those corresponding to the parent nuclide of that chain. In the case of radioactive decay chains in which any daughter nuclide has a half-life either longer than 10 days or greater than that of the parent nuclide, the parent and such daughter nuclides shall be considered as mixtures of different nuclides.

2.2.7.7.2.4 For mixtures of radionuclides, the determination of the basic radionuclide values referred to in 2.2.7.7.2.1 may be determined as follows:

$$x_m = \frac{1}{\sum_i \frac{f(i)}{X(i)}}$$

where,

f(i) is the fraction of activity or activity concentration of radionuclide i in the mixture;

X(i) is the appropriate value of A_1 or A_2, or the activity concentration for exempt material or the activity limit for an exempt consignment as appropriate for the radionuclide i; and

X_m is the derived value of A_1 or A_2, or the activity concentration for exempt material or the activity limit for an exempt consignment in the case of a mixture.

2.2.7.7.2.5 When the identity of each radionuclide is known but the individual activities of some of the radionuclides are not known, the radionuclides may be grouped and the lowest radionuclide value, as appropriate, for the radionuclides in each group may be used in applying the formulas in 2.2.7.7.2.4 and 2.2.7.7.1.4.2. Groups may be based on the total alpha activity and the total beta/gamma activity when these are known, using the lowest radionuclide values for the alpha emitters or beta/gamma emitters, respectively.

2.2.7.7.2.6 For individual radionuclides or for mixtures of radionuclides for which relevant data are not available, the values shown in Table 2.2.7.7.2.2 shall be used.

2.2.7.8 ***Limits on transport index (TI), criticality safety index (CSI), radiation levels for packages and overpacks***

2.2.7.8.1 Except for consignments under exclusive use, the transport index of any package or overpack shall not exceed 10, nor shall the criticality safety index of any package or overpack exceed 50.

2.2.7.8.2 Except for packages or overpacks carried under exclusive use by road under the conditions specified in 7.5.11, CV33 (3.5)(a), the maximum radiation level at any point on any external surface of a package or overpack shall not exceed 2 mSv/h.

2.2.7.8.3 The maximum radiation level at any point on any external surface of a package or overpack under exclusive use shall not exceed 10 mSv/h.

2.2.7.8.4 Packages and overpacks shall be assigned to either category I-WHITE, II-YELLOW or III-YELLOW in accordance with the conditions specified in Table 2.2.7.8.4 and with the following requirements:

(a) For a package or overpack, both the transport index and the surface radiation level conditions shall be taken into account in determining which is the appropriate category. Where the transport index satisfies the condition for one category but the surface radiation level satisfies the condition for a different category, the package or overpack shall be assigned to the higher category. For this purpose, category I-WHITE shall be regarded as the lowest category;

(b) The transport index shall be determined following the procedures specified in 2.2.7.6.1.1 and 2.2.7.6.1.2;

(c) If the surface radiation level is greater than 2 mSv/h, the package or overpack shall be carried under exclusive use and under the provisions of 7.5.11, CV33 (3.5) (a);

(d) A package carried under a special arrangement shall be assigned to category III-YELLOW;

(e) An overpack which contains packages carried under special arrangement shall be assigned to category III-YELLOW.

Table 2.2.7.8.4

CATEGORIES OF PACKAGES AND OVERPACKS

Conditions		
Transport index (TI)	**Maximum radiation level at any point on external surface**	**Category**
0 [a]	Not more than 0.005 mSv/h	I-WHITE
More than 0 but not more than 1 [a]	More than 0.005 mSv/h but not more than 0.5 mSv/h	II-YELLOW
More than 1 but not more than 10	More than 0.5 mSv/h but not more than 2 mSv/h	III-YELLOW
More than 10	More than 2 mSv/h but not more than 10 mSv/h	III-YELLOW [b]

[a] *If the measured TI is not greater than 0.05, the value quoted may be zero in accordance with 2.2.7.6.1.1(c).*

[b] *Shall also be carried under exclusive use.*

2.2.7.9 ***Requirements and controls for carriage of excepted packages***

2.2.7.9.1 Excepted packages which may contain radioactive material in limited quantities, instruments, manufactured articles as specified in 2.2.7.7.1.2 and empty packagings as specified in 2.2.7.9.6 may be carried under the following conditions:

(a) The applicable requirements specified in 2.2.7.9.2, 3.3.1 (special provision 290, if relevant), 4.1.9.1.2, 5.2.1.2, 5.2.1.7.1, 5.2.1.7.2, 5.2.1.7.3, 5.4.1.1.1 (a), 7.5.11 CV33 (5.2) and, as applicable 2.2.7.9.3 to 2.2.7.9.6;

(b) The requirements for excepted packages specified in 6.4.4;

(c) If the excepted package contains fissile material, one of the fissile exceptions provided by 6.4.11.2 shall apply and the requirement of 6.4.7.2 shall be met.

2.2.7.9.2 The radiation level at any point on the external surface of an excepted package shall not exceed 5 μSv/h.

2.2.7.9.3 Radioactive material which is enclosed in or is included as a component part of an instrument or other manufactured article, with activity not exceeding the item and package limits specified in columns 2 and 3 respectively of Table 2.2.7.7.1.2.1, may be carried in an excepted package provided that:

(a) The radiation level at 10 cm from any point on the external surface of any unpackaged instrument or article is not greater than 0.1 mSv/h; and

(b) Each instrument or manufactured article bears the marking "RADIOACTIVE" except:

(i) radioluminescent time-pieces or devices;

(ii) consumer products that either have received regulatory approval according to 2.2.7.1.2 (d) or do not individually exceed the activity limit for an exempt consignment in column (5) of Table 2.2.7.7.2.1, provided such products are carried in a package that bears the marking "RADIOACTIVE" on an internal surface in such a manner that warning of the presence of radioactive material is visible on opening the package; and

(c) The active material is completely enclosed by non-active components (a device performing the sole function of containing radioactive material shall not be considered to be an instrument or manufactured article).

2.2.7.9.4 Radioactive material in forms other than as specified in 2.2.7.9.3, with an activity not exceeding the limit specified in column 4 of Table 2.2.7.7.1.2.1, may be carried in an excepted package provided that:

(a) The package retains its radioactive contents under routine conditions of carriage; and

(b) The package bears the marking "RADIOACTIVE" on an internal surface in such a manner that a warning of the presence of radioactive material is visible on opening the package.

2.2.7.9.5 A manufactured article in which the sole radioactive material is unirradiated natural uranium, unirradiated depleted uranium or unirradiated natural thorium may be carried as an excepted package provided that the outer surface of the uranium or thorium is enclosed in an inactive sheath made of metal or some other substantial material.

2.2.7.9.6 An empty packaging which had previously contained radioactive material may be carried as an excepted package provided that:

(a) It is in a well maintained condition and securely closed;

(b) The outer surface of any uranium or thorium in its structure is covered with an inactive sheath made of metal or some other substantial material;

(c) The level of internal non-fixed contamination does not exceed one hundred times the levels specified in 4.1.9.1.2; and

(d) Any labels which may have been displayed on it in conformity with 5.2.2.1.11.1 are no longer visible.

2.2.7.9.7 The following provisions do not apply to excepted packages and the controls for carriage of excepted packages:

2.2.7.4.1, 2.2.7.4.2, 4.1.9.1.3, 4.1.9.1.4, 5.1.3.2, 5.1.5.1.1, 5.1.5.1.2, 5.2.2.1.11.1, 5.4.1.1.1, except (a), 5.4.1.2.5.1, 5.4.1.2.5.2, 5.4.3, 6.4.6.1, 7.5.11 CV 33 except for para. (5.2).

2.2.7.10 *(Reserved)*

2.2.8 Class 8 Corrosive substances

2.2.8.1 *Criteria*

2.2.8.1.1 The heading of Class 8 covers substances and articles containing substances of this Class which by chemical action attack epithelial tissue - of skin or mucous membranes - with which they are in contact, or which in the event of leakage are capable of damaging or destroying other goods, or means of transport. The heading of this Class also covers other substances which form a corrosive liquid only in the presence of water, or which produce corrosive vapour or mist in the presence of natural moisture of the air.

2.2.8.1.2 Substances and articles of Class 8 are subdivided as follows:

C1-C10 Corrosive substances without subsidiary risk:

- C1-C4 Acid substances:
  - C1 Inorganic, liquid;
  - C2 Inorganic, solid;
  - C3 Organic, liquid;
  - C4 Organic, solid;
- C5-C8 Basic substances:
  - C5 Inorganic, liquid;
  - C6 Inorganic, solid;
  - C7 Organic, liquid;
  - C8 Organic, solid;
- C9-C10 Other corrosive substances:
  - C9 Liquid;
  - C10 Solid;

C11 Articles;

CF Corrosive substances, flammable:
- CF1 Liquid;
- CF2 Solid;

CS Corrosive substances, self-heating:
- CS1 Liquid;
- CS2 Solid;

CW Corrosive substances which, in contact with water, emit flammable gases:
- CW1 Liquid;
- CW2 Solid;

CO Corrosive substances, oxidizing:
- CO1 Liquid;
- CO2 Solid;

CT Corrosive substances, toxic:
- CT1 Liquid;
- CT2 Solid;

CFT Corrosive substances, flammable, liquid, toxic;

COT Corrosive substances, oxidizing, toxic.

Classification and assignment of packing groups

2.2.8.1.3 Substances of Class 8 shall be classified in three packing groups according to the degree of danger they present for carriage, as follows:

Packing group I:	highly corrosive substances
Packing group II:	corrosive substances
Packing group III:	slightly corrosive substances.

2.2.8.1.4 Substances and articles classified in Class 8 are listed in Table A of Chapter 3.2. Allocation of substances to packing groups I, II and III has been made on the basis of experience taking into account such additional factors as inhalation risk (see 2.2.8.1.5) and reactivity with water (including the formation of dangerous decomposition products).

2.2.8.1.5 A substance or preparation meeting the criteria of Class 8 having an inhalation toxicity of dusts and mists (LC_{50}) in the range of packing group I, but toxicity through oral ingestion or dermal contact only in the range of packing group III or less, shall be allocated to Class 8.

2.2.8.1.6 Substances, including mixtures, not mentioned by name in Table A of Chapter 3.2 can be assigned to the relevant entry of sub-section 2.2.8.3, and to the relevant packing group on the basis of the length of time of contact necessary to produce full thickness destruction of human skin in accordance with the criteria of (a) to (c) below.

Substances which are judged not to cause full thickness destruction of human skin shall still be considered for their potential to cause corrosion to certain metal surfaces. In assigning the packing group, account shall be taken of human experience in instances of accidental exposure. In the absence of human experience, the grouping shall be based on data obtained from experiments in accordance with OECD Guideline 404[5].

(a) Packing group I is assigned to substances that cause full thickness destruction of intact skin tissue within an observation period up to 60 minutes starting after the exposure time of 3 minutes or less;

(b) Packing group II is assigned to substances that cause full thickness destruction of intact skin tissue within an observation period up to 14 days starting after the exposure time of more than 3 minutes but not more than 60 minutes;

(c) Packing group III is assigned to substances that:

- cause full thickness destruction of intact skin tissue within an observation period up to 14 days starting after the exposure time of more than 60 minutes but not more than 4 hours; or

- are judged not to cause full thickness destruction of intact skin tissue, but which exhibit a corrosion rate on steel or aluminium surfaces exceeding 6.25 mm a year at a test temperature of 55 °C. For the purposes of testing steel, type S235JR+CR (1.0037 resp. St 37-2), S275J2G3+CR (1.0144 resp. St 44-3), ISO 3574, Unified Numbering System (UNS) G10200 or SAE 1020, and for testing aluminium, non-clad, types 7075-T6 or AZ5GU-T6 shall be used. An acceptable test is prescribed in the Manual of Tests and Criteria, Part III, Section 37.

[5] *OECD guidelines for Testing of Chemicals, No. 404 " Acute Dermal Irritation/Corrosion" (1992).*

2.2.8.1.7 If substances of Class 8, as a result of admixtures, come into categories of risk different from those to which the substances mentioned by name in Table A of Chapter 3.2 belong, these mixtures or solutions shall be assigned to the entries to which they belong, on the basis of their actual degree of danger.

NOTE: *For the classification of solutions and mixtures (such as preparations and wastes), see also 2.1.3.*

2.2.8.1.8 On the basis of the criteria set out in paragraph 2.2.8.1.6, it may also be determined whether the nature of a solution or mixture mentioned by name or containing a substance mentioned by name is such that the solution or mixture is not subject to the provisions for this Class.

2.2.8.1.9 Substances, solutions and mixtures, which

- do not meet the criteria of Directives 67/548/EEC[2] or 88/379/EEC[3] as amended and therefore are not classified as corrosive according to these directives, as amended; and

- do not exhibit a corrosive effect on steel or aluminium;

may be considered as substances not belonging to Class 8.

NOTE*: UN No. 1910 calcium oxide and UN No. 2812 sodium aluminate, listed in the UN Model Regulations, are not subject to the provisions of ADR.*

2.2.8.2 ***Substances not accepted for carriage***

2.2.8.2.1 The chemically unstable substances of Class 8 shall not be accepted for carriage unless the necessary steps have been taken to prevent their dangerous decomposition or polymerization during carriage. To this end it shall in particular be ensured that receptacles and tanks do not contain any substance liable to promote these reactions.

2.2.8.2.2 The following substances shall not be accepted for carriage:

- UN No. 1798 NITROHYDROCHLORIC ACID;

- chemically unstable mixtures of spent sulphuric acid;

- chemically unstable mixtures of nitrating acid or mixtures of residual sulphuric and nitric acids, not denitrated;

- perchloric acid aqueous solution with more than 72 % pure acid, by mass, or mixtures of perchloric acid with any liquid other than water.

---

[2] *Council Directive 67/548/EEC of 27 June 1967 on the approximation of laws, regulations and administrative provisions relating to the classification, packaging and labelling of dangerous substances (Official Journal of the European Communities No. L 196 of 16.08.1967, page 1).*

[3] *Council Directive 88/379/EEC on the approximation of laws, regulations and administrative provisions relating to the classification, packaging and labelling of dangerous preparations (Official Journal of the European Communities No. L.187 of 16.07.1988, page 14).*

2.2.8.3 *List of collective entries*

Corrosive substances <u>without</u> subsidiary risk

Acid **C1-C4**	**inorganic**	**liquid**	**C1**	2584 ALKYLSULPHONIC ACIDS, LIQUID with more than 5% free sulphuric acid or 2584 ARYLSULPHONIC ACIDS, LIQUID with more than 5% free sulphuric acid 2693 BISULPHITES, AQUEOUS SOLUTION, N.O.S. 2837 BISULPHATES, AQUEOUS SOLUTION 3264 CORROSIVE LIQUID, ACIDIC, INORGANIC, N.O.S.
		solid	**C2**	1740 HYDROGENDIFLUORIDES, N.O.S. 2583 ALKYLSULPHONIC ACIDS, SOLID with more than 5% free sulphuric acid or 2583 ARYLSULPHONIC ACIDS, SOLID with more than 5% free sulphuric acid 3260 CORROSIVE SOLID, ACIDIC, INORGANIC, N.O.S.
	organic	**liquid**	**C3**	2586 ALKYLSULPHONIC ACIDS, LIQUID with not more than 5% free sulphuric acid or 2586 ARYLSULPHONIC ACIDS, LIQUID with not more than 5% free sulphuric acid 2987 CHLOROSILANES, CORROSIVE, N.O.S. 3145 ALKYLPHENOLS, LIQUID, N.O.S. (including C_2-C_{12} homologues) 3265 CORROSIVE LIQUID, ACIDIC, ORGANIC, N.O.S
		solid	**C4**	2430 ALKYLPHENOLS, SOLID, N.O.S. (including C_2-C_{12} homologues) 2585 ALKYLSULPHONIC ACIDS, SOLID with not more than 5% free sulphuric acid or 2585 ARYLSULPHONIC ACIDS, SOLID with not more than 5% free sulphuric acid 3261 CORROSIVE SOLID, ACIDIC, ORGANIC, N.O.S.
Basic **C5-C8**	**inorganic**	**liquid**	**C5**	1719 CAUSTIC ALKALI LIQUID, N.O.S. 2797 BATTERY FLUID, ALKALI 3266 CORROSIVE LIQUID, BASIC, INORGANIC, N.O.S.
		solid	**C6**	3262 CORROSIVE SOLID, BASIC, INORGANIC, N.O.S.
	organic	**liquid**	**C7**	2735 AMINES, LIQUID, CORROSIVE, N.O.S. or 2735 POLYAMINES, LIQUID, CORROSIVE, N.O.S. 3267 CORROSIVE LIQUID, BASIC, ORGANIC, N.O.S.
		solid	**C8**	3259 AMINES, SOLID, CORROSIVE, N.O.S., or 3259 POLYAMINES, SOLID, CORROSIVE, N.O.S. 3263 CORROSIVE SOLID, BASIC, ORGANIC, N.O.S.
Other corrosive substances **C9-C10**		**liquid**	**C9**	1903 DISINFECTANT, LIQUID, CORROSIVE, N.O.S 2801 DYE, LIQUID, CORROSIVE, N.O.S. or 2801 DYE INTERMEDIATE, LIQUID, CORROSIVE, N.O.S. 3066 PAINT (including paint, enamel, stain, shellac, varnish, polish, liquid filler and lacquer base) or 3066 PAINT RELATED MATERIAL (including paint thinning or reducing compound) 1760 CORROSIVE LIQUID, N.O.S.
		solid[a]	**C10**	3147 DYE, SOLID, CORROSIVE, N.O.S. or 3147 DYE INTERMEDIATE, SOLID, CORROSIVE, N.O.S. 3244 SOLIDS CONTAINING CORROSIVE LIQUID, N.O.S. 1759 CORROSIVE SOLID, N.O.S.
Articles			**C11**	2794 BATTERIES, WET, FILLED WITH ACID, electric storage 2795 BATTERIES, WET, FILLED WITH ALKALI, electric storage 2800 BATTERIES, WET, NON-SPILLABLE, electric storage 3028 BATTERIES, DRY, CONTAINING POTASSIUM HYDROXIDE SOLID, electric storage

(cont'd on next page)

[a] *Mixtures of solids which are not subject to the provisions of ADR and of corrosive liquids may be carried under UN No. 3244 without being subject to the classification criteria of Class 8, provided there is no free liquid visible at the time the substance is loaded or at the time the packaging, container or transport unit is closed. Each packaging shall correspond to a design type which has passed the leakproofness test for Packing group II level.*

Corrosive substances with subsidiary risk(s)

Flammable [b] **CF**	**liquid**	**CF1**	2734 AMINES, LIQUID, CORROSIVE, FLAMMABLE, N.O.S. or 2734 POLYAMINES, LIQUID, CORROSIVE, FLAMMABLE, N.O.S. 2986 CHLOROSILANES, CORROSIVE, FLAMMABLE, N.O.S. 2920 CORROSIVE LIQUID, FLAMMABLE, N.O.S.
	solid	**CF2**	2921 CORROSIVE SOLID, FLAMMABLE, N.O.S.
Self-heating **CS**	**liquid**	**CS1**	3301 CORROSIVE LIQUID, SELF-HEATING, N.O.S.
	solid	**CS2**	3095 CORROSIVE SOLID, SELF-HEATING, N.O.S.
Water-reactive **CW**	**liquid** [b]	**CW1**	3094 CORROSIVE LIQUID, WATER-REACTIVE, N.O.S.
	solid	**CW2**	3096 CORROSIVE SOLID, WATER-REACTIVE, N.O.S.
Oxidizing **CO**	**liquid**	**CO1**	3093 CORROSIVE LIQUID, OXIDIZING, N.O.S.
	solid	**CO2**	3084 CORROSIVE SOLID, OXIDIZING, N.O.S.
Toxic [d] **CT**	**liquid** [c]	**CT1**	2922 CORROSIVE LIQUID, TOXIC, N.O.S.
	solid [e]	**CT2**	2923 CORROSIVE SOLID, TOXIC, N.O.S.
Flammable, liquid, toxic [d]		**CFT**	No collective entry with this classification code available; if need be, classification under a collective entry with a classification code to be determined according to table of precedence of hazard in 2.1.3.10.
Oxidizing, toxic [d, e]		**COT**	No collective entry with this classification code available; if need be, classification under a collective entry with a classification code to be determined according to table of precedence of hazard in 2.1.3.10.

[b] *Chlorosilanes which, in contact with water or moist air, emit flammable gases, are substances of Class 4.3.*

[c] *Chloroformates having predominantly toxic properties are substances of Class 6.1.*

[d] *Corrosive substances which are highly toxic by inhalation, as defined in 2.2.61.1.4 to 2.2.61.1.9 are substances of Class 6.1.*

[e] *UN No. 2505 AMMONIUM FLUORIDE, UN No. 1812 POTASSIUM FLUORIDE, SOLID, UN No. 1690 SODIUM FLUORIDE, SOLID, UN No. 2674 SODIUM FLUOROSILICATE, UN No. 2856 FLUOROSILICATES, N.O.S., UN No. 3415 SODIUM FLUORIDE SOLUTION and UN No. 3422 POTASSIUM FLUORIDE SOLUTION are substances of Class 6.1.*

2.2.9 Class 9 Miscellaneous dangerous substances and articles

2.2.9.1 *Criteria*

2.2.9.1.1 The heading of Class 9 covers substances and articles which, during carriage, present a danger not covered by the heading of other classes.

2.2.9.1.2 The substances and articles of Class 9 are subdivided as follows:

M1 Substances which, on inhalation as fine dust, may endanger health;

M2 Substances and apparatus which, in the event of fire, may form dioxins;

M3 Substances evolving flammable vapour;

M4 Lithium batteries;

M5 Life-saving appliances;

M6-M8 Environmentally hazardous substances:

M6 Pollutant to the aquatic environment, liquid;
M7 Pollutant to the aquatic environment, solid;
M8 Genetically modified micro-organisms and organisms;

M9-M10 Elevated temperature substances:

M9 Liquid;
M10 Solid;

M11 Other substances presenting a danger during carriage, but not meeting the definitions of another class.

Definitions and classification

2.2.9.1.3 Substances and articles classified in Class 9 are listed in Table A of Chapter 3.2. The assignment of substances and articles not mentioned by name in Table A of Chapter 3.2 to the relevant entry of that Table or of sub-section 2.2.9.3 shall be done in accordance with 2.2.9.1.4 to 2.2.9.1.14 below.

Substances which, on inhalation as fine dust, may endanger health

2.2.9.1.4 Substances which, on inhalation as fine dust, may endanger health include asbestos and mixtures containing asbestos.

Substances and apparatus which, in the event of fire, may form dioxins

2.2.9.1.5 Substances and apparatus which, in the event of fire, may form dioxins include polychlorinated biphenyls (PCBs) and terphenyls (PCTs) and polyhalogenated biphenyls and terphenyls and mixtures containing these substances, as well as apparatus such as transformers, condensers and apparatus containing those substances or mixtures.

NOTE: *Mixtures with a PCB or PCT content of not more than 50 mg/kg are not subject to the provisions of ADR.*

Substances evolving flammable vapour

2.2.9.1.6 Substances evolving flammable vapour include polymers containing flammable liquids with a flash-point not exceeding 55 °C.

Lithium batteries

2.2.9.1.7 Lithium cells and batteries may be assigned to Class 9 if they meet the requirements of special provision 230 of Chapter 3.3. They are not subject to the provisions of ADR if they meet the requirements of special provision 188 of Chapter 3.3. They shall be classified in accordance with the procedures of Section 38.3 of the Manual of Tests and Criteria.

Life-saving appliances

2.2.9.1.8 Life-saving appliances include life-saving appliances and motor vehicle components which meet the descriptions of special provisions 235 or 296 of Chapter 3.3.

Environmentally hazardous substances

2.2.9.1.9 Environmentally hazardous substances include liquid or solid substances pollutant to the aquatic environment and solutions and mixtures of such substances (such as preparations and wastes), which cannot be classified in the other classes or under any other entry of Class 9 listed in Table A of Chapter 3.2. It also includes genetically modified micro-organisms and organisms.

Pollutants to the aquatic environment

2.2.9.1.10 Assignment of a substance to the entries UN No. 3082 ENVIRONMENTALLY HAZARDOUS SUBSTANCE, LIQUID, N.O.S and UN No. 3077 ENVIRONMENTALLY HAZARDOUS SUBSTANCE, SOLID, N.O.S. as pollutant to the aquatic environment shall be as indicated in 2.3.5. Notwithstanding the provisions of 2.3.5, substances which cannot be assigned to other classes of ADR or to other entries of Class 9, and which are not identified in Council Directive 67/548/EEC of 27 June 1967 on the approximation of laws, regulations and administrative provisions relating to the classification, packaging and labelling of dangerous substances[6], as amended, as substances to which letter N "Environmentally hazardous" (R50; R50/53; R51/53) has been allocated, are not subject to ADR.

Notwithstanding the provisions of 2.1.3.8, solutions and mixtures (such as preparations and wastes) of substances to which letter N "Environmentally hazardous" (R50; R50/53; R51/53) has been allocated in Directive 67/548/EEC, as amended, need only be assigned to UN Nos. 3077 or 3082 if, according to Directive 1999/45/EC of the European Parliament and of the Council of 31 May 1999 concerning the approximation of the laws, regulations and administrative provisions of the Member States relating to the classification, packaging and labelling of dangerous preparations[7], as amended, they are also allocated letter N "Environmentally hazardous" (R50; R50/53; R51/53) and they cannot be assigned to one of classes 1 to 8 or to any other entry of Class 9.

Genetically modified micro-organisms or organisms

2.2.9.1.11 Genetically modified micro-organisms (GMMOs) and genetically modified organisms (GMOs) are micro-organisms and organisms in which genetic material has been purposely altered through genetic engineering in a way that does not occur naturally. They are assigned

---

[6] *Official Journal of the European Communities No.196, of 16 August 1967, pp. 1 – 5.*

[7] *Official Journal of the European Communities No. L 200, of 30 July 1999, pp. 1 – 68.*

to Class 9 (UN No. 3245) if they do not meet the definition of infectious substances, but are capable of altering animals, plants or microbiological substances in a way not normally the result of natural reproduction.

NOTE 1: *GMMOs which are infectious are substances of Class 6.2, UN Nos. 2814 and 2900.*

NOTE 2: *GMMOs or GMOs are not subject to the provisions of ADR when authorized for use by the competent authorities of the countries of origin, transit and destination*[8].

NOTE 3: *Live animals shall not be used to carry genetically modified micro-organisms classified in Class 9 unless the substance can be carried no other way.*

2.2.9.1.12 Genetically modified organisms, which are known or suspected to be dangerous to the environment shall be carried in accordance with conditions specified by the competent authority of the country of origin.

Elevated temperature substances

2.2.9.1.13 Elevated temperature substances include substances which are carried or handed over for carriage in the liquid state at or above 100 °C and, in the case of those with a flash-point, below their flash-point. They also include solids which are carried or handed over for carriage at or above 240 °C.

NOTE: *Elevated temperature substances may be assigned to Class 9 only if they do not meet the criteria of any other class.*

Other substances presenting a danger during carriage but not meeting the definitions of another class.

2.2.9.1.14 The following other miscellaneous substances not meeting the definitions of another class are assigned to Class 9:

Solid ammonia compounds having a flash-point below 61 °C;

Low hazard dithionites;

Highly volatile liquids;

Substances emitting noxious fumes;

Substances containing allergens;

Chemical kits and first aid kits;

NOTE: *UN No. 1845 carbon dioxide, solid (dry ice), UN No. 2071 ammonium nitrate fertilizers, UN No. 2216 fish meal (fish scrap), stabilized, UN No. 2807 magnetized material, UN No. 3166 engine, internal combustion or vehicle, flammable gas powered or vehicle, flammable liquid powered, UN No. 3171 battery-powered vehicle or 3171 battery-powered equipment (wet battery), UN No. 3334 aviation regulated liquid, n.o.s., UN No. 3335 aviation regulated solid, n.o.s. and UN No. 3363 dangerous goods in machinery or dangerous goods in apparatus listed in the UN Model Regulations, are not subject to the provisions of ADR.*

---

[8] *See in particular Part C of Directive 2001/18/EC of the European Parliament and of the Council on the deliberate release into the environment of genetically modified organisms and repealing Council Directive 90/220/EEC (Official Journal of the European Communities, No. L 106, of 17 April 2001, pp. 8-14), which sets out the authorization procedures for the European Community.*

Assignment of the packing groups

2.2.9.1.15 The substances and articles of Class 9 listed as such in Table A of Chapter 3.2 shall be assigned to one of the following packing groups according to their degree of danger:

Packing group II: substances presenting medium danger;
Packing group III: substances presenting low danger.

2.2.9.2 ***Substances and articles not accepted for carriage***

The following substances and articles shall not be accepted for carriage:

- Lithium batteries which do not meet the relevant conditions of special provisions 188, 230 or 636 of Chapter 3.3;

- Uncleaned empty containment vessels for apparatus such as transformers and condensers containing substances assigned to UN Nos. 2315, 3151 or 3152.

2.2.9.3 *List of collective entries*

Substances which, on inhalation as fine dust, may endanger health		**M1**	2212 BLUE ASBESTOS (crocidolite) or 2212 BROWN ASBESTOS (amosite, mysorite) 2590 WHITE ASBESTOS (chrysotile, actinolite, anthophyllite, tremolite)
Substances and apparatus which, in the event of fire, may form dioxins		**M2**	2315 POLYCHLORINATED BIPHENYLS, LIQUID 3432 POLYCHLORINATED BIPHENYLS, SOLID 3151 POLYHALOGENATED BIPHENYLS, LIQUID or 3151 POLYHALOGENATED TERPHENYLS, LIQUID 3152 POLYHALOGENATED BIPHENYLS, SOLID or 3152 POLYHALOGENATED TERPHENYLS, SOLID
Substances evolving flammable vapour		**M3**	2211 POLYMERIC BEADS, EXPANDABLE, evolving flammable vapour 3314 PLASTICS MOULDING COMPOUND in dough, sheet or extruded rope form evolving flammable vapour
Lithium batteries		**M4**	3090 LITHIUM BATTERIES 3091 LITHIUM BATTERIES CONTAINED IN EQUIPMENT or 3091 LITHIUM BATTERIES PACKED WITH EQUIPMENT
Live-saving appliances		**M5**	2990 LIFE-SAVING APPLIANCES, SELF-INFLATING 3072 LIFE-SAVING APPLIANCES NOT SELF-INFLATING containing dangerous goods as equipment 3268 AIR BAG INFLATORS or 3268 AIR BAG MODULES or 3268 SEAT-BELT PRETENSIONERS
Environmentally hazardous substances	**pollutant to the aquatic environment, liquid**	**M6**	3082 ENVIRONMENTALLY HAZARDOUS SUBSTANCE, LIQUID, N.O.S.
	pollutant to the aquatic environment, solid	**M7**	3077 ENVIRONMENTALLY HAZARDOUS SUBSTANCE, SOLID, N.O.S.
	genetically modified micro-organisms and organisms	**M8**	3245 GENETICALLY MODIFIED MICRO-ORGANISMS
Elevated temperature substances	**liquid**	**M9**	3257 ELEVATED TEMPERATURE LIQUID, N.O.S., at or above 100 °C and below its flash-point (including molten metal, molten salts, etc.)
	solid	**M10**	3258 ELEVATED TEMPERATURE SOLID, N.O.S., at or above 240 °C
Other substances or articles presenting a danger during carriage, but not meeting the definitions of another class		**M11**	No collective entry available. Only substances listed in Table A of Chapter 3.2 are subject to the provisions for Class 9 under this classification code, as follows: 1841 ACETALDEHYDE AMMONIA 1931 ZINC DITHIONITE (ZINC HYDROSULPHITE) 1941 DIBROMODIFLUOROMETHANE 1990 BENZALDEHYDE 2969 CASTOR BEANS, or 2969 CASTOR MEAL, or 2969 CASTOR POMACE, or 2969 CASTOR FLAKE 3316 CHEMICAL KIT, or 3316 FIRST AID KIT 3359 FUMIGATED UNIT

CHAPTER 2.3

TEST METHODS

2.3.0 General

Unless otherwise provided for in Chapter 2.2 or in this Chapter, the test methods to be used for the classification of dangerous goods are those described in the Manual of Tests and Criteria.

2.3.1 Exudation test for blasting explosives of Type A

2.3.1.1 Blasting explosives of type A (UN No. 0081) shall, if they contain more than 40% liquid nitric ester, in addition to the testing specified in the Manual of Tests and Criteria, satisfy the following exudation test.

2.3.1.2 The apparatus for testing blasting explosive for exudation (figs. 1 to 3) consists of a hollow bronze cylinder. This cylinder, which is closed at one end by a plate of the same metal, has an internal diameter of 15.7 mm and a depth of 40 mm.

It is pierced by 20 holes 0.5 mm in diameter (four sets of five holes) on the circumference. A bronze piston, cylindrically fashioned over a length of 48 mm and having a total length of 52 mm, slides into the vertically placed cylinder.

The piston, whose diameter is 15.6 mm, is loaded with a mass of 2 220 g so that a pressure of 120 kPa (1.20 bar) is exerted on the base of the cylinder.

2.3.1.3 A small plug of blasting explosive weighing 5 to 8 g, 30 mm long and 15 mm in diameter, is wrapped in very fine gauze and placed in the cylinder; the piston and its loading mass are then placed on it so that the blasting explosive is subjected to a pressure of 120 kPa (1.20 bar). The time taken for the appearance of the first signs of oily droplets (nitroglycerine) at the outer orifices of the cylinder holes is noted.

2.3.1.4 The blasting explosive is considered satisfactory if the time elapsing before the appearance of the liquid exudations is more than five minutes, the test having been carried out at a temperature of 15 °C to 25 °C.

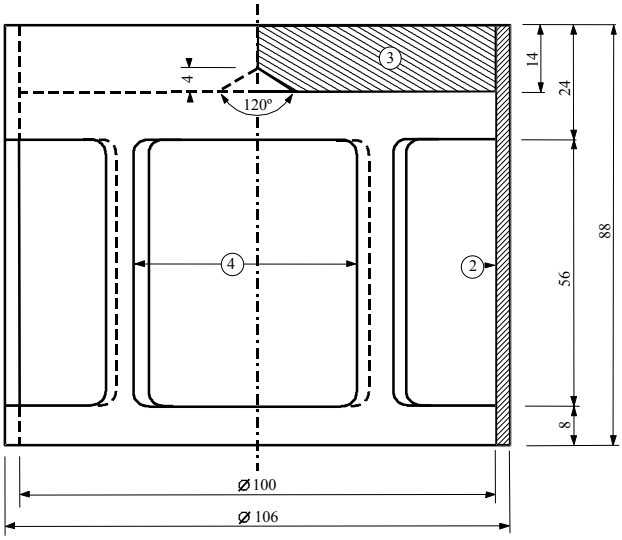

Fig.1: Bell-form charge, mass 2220 g, capable of being suspended from a bronze piston

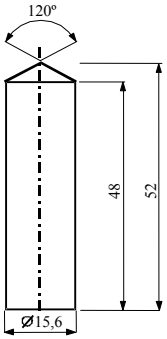

Fig.2: Cylindrical bronze piston, dimensions in mm

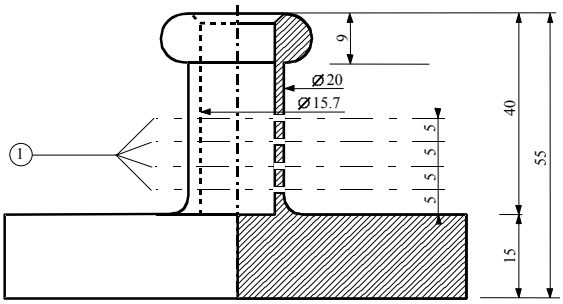

Fig.3: Hollow bronze cylinder, closed at one end; Plan and cut dimensions in mm

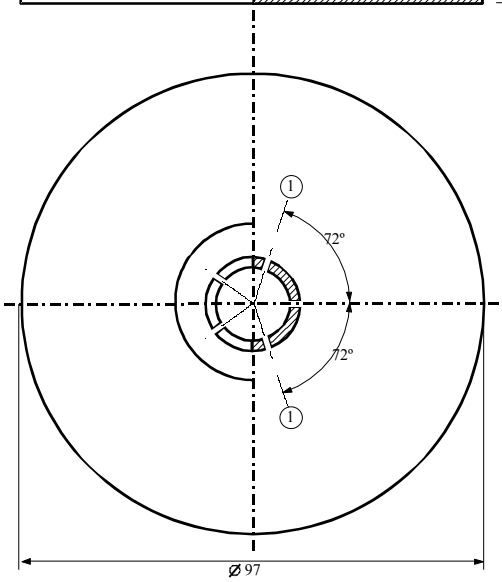

Fig. 1 to 3

(1) 4 series of 5 holes at 0.5 N
(2) copper
(3) iron plate with centre cone at the inferior face
(4) 4 openings, approximately 46x56, set at even intervals on the periphery

2.3.2 Tests relating to nitrated cellulose mixtures of Class 4.1

2.3.2.1 Nitrocellulose heated for half an hour at 132 °C shall not give off visible yellowish-brown nitrous fumes (nitrous gases). The ignition temperature shall be above 180 °C. See 2.3.2.3 to 2.3.2.8, 2.3.2.9 (a) and 2.3.2.10 below.

2.3.2.2 3 g of plasticized nitrocellulose, heated for one hour at 132 °C, shall not give off visible yellowish-brown nitrous fumes (nitrous gases). The ignition temperature shall be above 170 °C. See 2.3.2.3 to 2.3.2.8, 2.3.2.9 (b) and 2.3.2.10 below.

2.3.2.3 The test procedures set out below are to be applied when differences of opinion arise as to the acceptability of substances for carriage by road.

2.3.2.4 If other methods or test procedures are used to verify the conditions of stability prescribed above in this section, those methods shall lead to the same findings as could be reached by the methods specified below.

2.3.2.5 In carrying out the stability tests by heating described below, the temperature of the oven containing the sample under test shall not deviate by more than 2 °C from the prescribed temperature; the prescribed duration of a 30-minute or 60-minute test shall be observed to within two minutes. The oven shall be such that the required temperature is restored not more than five minutes after insertion of the sample.

2.3.2.6 Before undergoing the tests in 2.3.2.9 and 2.3.2.10, the samples shall be dried for not less than 15 hours at the ambient temperature in a vacuum desiccator containing fused and granulated calcium chloride, the sample substance being spread in a thin layer; for this purpose, substances which are neither in powder form nor fibrous shall be ground, or grated, or cut into small pieces. The pressure in the desiccator shall be brought below 6.5 kPa (0.065 bar).

2.3.2.7 Before being dried as prescribed in 2.3.2.6 above, substances conforming to 2.3.2.2 shall undergo preliminary drying in a well-ventilated oven, with its temperature set at 70 °C, until the loss of mass per quarter-hour is less than 0.3 % of the original mass.

2.3.2.8 Weakly nitrated nitrocellulose conforming to 2.3.2.1 shall first undergo preliminary drying as prescribed in 2.3.2.7 above; drying shall then be completed by keeping the nitrocellulose for at least 15 hours over concentrated sulphuric acid in a desiccator.

2.3.2.9 ***Test of chemical stability under heat***

(a) *Test of the substance listed in paragraph 2.3.2.1 above.*

(i) In each of two glass test tubes having the following dimensions:

length	350	mm
internal diameter	16	mm
thickness of wall	1.5	mm

is placed 1 g of substance dried over calcium chloride (if necessary the drying shall be carried out after reducing the substance to pieces weighing not more than 0.05 g each).

Both test tubes, completely covered with loose-fitting closures, are then so placed in an oven that at least four-fifths of their length is visible, and are kept at a constant temperature of 132 °C for 30 minutes. It is observed whether nitrous gases in the form of yellowish-brown fumes clearly visible against a white background are given off during this time;

(ii) In the absence of such fumes the substance is deemed to be stable;

(b) *Test of plasticized nitrocellulose (see 2.3.2.2)*

(i) 3 g of plasticized nitrocellulose are placed in glass test tubes, similar to those referred to in (a), which are then placed in an oven kept at a constant temperature of 132 °C;

(ii) The test tubes containing the plasticized nitrocellulose are kept in the oven for one hour. During this time no yellowish-brown nitrous fumes (nitrous gases) shall be visible. Observation and appraisal as in (a).

2.3.2.10 ***Ignition temperature (see 2.3.2.1 and 2.3.2.2)***

(a) The ignition temperature is determined by heating 0.2 g of substance enclosed in a glass test tube immersed in a Wood's alloy bath. The test tube is placed in the bath when the latter has reached 100 °C. The temperature of the bath is then progressively increased by 5 °C per minute;

(b) The test tubes must have the following dimensions:

length	125 mm
internal diameter	15 mm
thickness of wall	0.5 mm

and shall be immersed to a depth of 20 mm;

(c) The test shall be repeated three times, the temperature at which ignition of the substance occurs, i.e., slow or rapid combustion, deflagration or detonation, being noted each time;

(d) The lowest temperature recorded in the three tests is the ignition temperature.

2.3.3 **Tests relating to flammable liquids of Classes 3, 6.1 and 8**

2.3.3.1 ***Test for determining flash-point***

2.3.3.1.1 The flash-point shall be determined by means of one of the following types of apparatus:

(a) Abel;

(b) Abel-Pensky;

(c) Tag;

(d) Pensky-Martens;

(e) Apparatus in accordance with ISO 3679: 1983 or ISO 3680: 1983.

2.3.3.1.2 To determine the flash-point of paints, gums and similar viscous products containing solvents, only apparatus and test methods suitable for determining the flash-point for viscous liquids shall be used, in accordance with the following standards:

(a) International Standard ISO 3679: 1983;

(b) International Standard ISO 3680: 1983;

(c) International Standard ISO 1523: 1983;

(d) German Standard DIN 53213: 1978, Part 1.

2.3.3.1.3 The test procedure shall be either according to an equilibrium method or according to a non-equilibrium method.

2.3.3.1.4 For the procedure according to an equilibrium method, see:

(a) International Standard ISO 1516: 1981;

(b) International Standard ISO 3680: 1983;

(c) International Standard ISO 1523: 1983;

(d) International Standard ISO 3679: 1983.

2.3.3.1.5 The procedure according to a non-equilibrium method shall be:

(a) for the Abel apparatus, see:

(i) British Standard BS 2000 Part 170: 1995;

(ii) French Standard NF MO7-011: 1988;

(iii) French Standard NF T66-009: 1969;

(b) for the Abel-Pensky apparatus, see:

(i) German Standard DIN 51755, Part 1: 1974 (for temperatures from 5 °C to 65 °C);

(ii) German Standard DIN 51755, Part 2: 1978 (for temperatures below 5 °C);

(iii) French Standard NF MO7-036: 1984;

(c) for the Tag apparatus, see American Standard ASTM D 56: 1993;

(d) for the Pensky-Martens apparatus, see:

(i) International Standard ISO 2719: 1988;

(ii) European Standard EN 22719 in each of its national versions (e.g. BS 2000, part 404/EN 22719): 1994;

(iii) American Standard ASTM D 93: 1994;

(iv) Institute of Petroleum Standard IP 34: 1988.

2.3.3.1.6 The test methods listed in 2.3.3.1.4 and 2.3.3.1.5 shall only be used for flash-point ranges which are specified in the individual methods. The possibility of chemical reactions between the substance and the sample holder shall be considered when selecting the method to be used. The apparatus shall, as far as is consistent with safety, be placed in a draught-free position. For safety, a method utilizing a small sample size, around 2 ml, shall be used for organic peroxides and self-reactive substances (also known as "energetic" substances), or for toxic substances.

2.3.3.1.7 When the flash-point, determined by a non-equilibrium method in accordance with 2.3.3.1.5 is found to be 23 ± 2 °C or 61 ± 2 °C, it shall be confirmed for each temperature range by an equilibrium method in accordance with 2.3.3.1.4.

2.3.3.1.8 In the event of a dispute as to the classification of a flammable liquid, the classification proposed by the consignor shall be accepted if a check-test of the flash-point, yields a result

not differing by more than 2 °C from the limits (23 °C and 61 °C respectively) stated in 2.2.3.1. If the difference is more than 2 °C, a second check-test shall be carried out, and the lowest figure of the flash-points obtained in either check-test shall be adopted.

2.3.3.2 ***Test for determining peroxide content***

To determine the peroxide content of a liquid, the procedure is as follows:

A quantity p (about 5 g, weighed to the nearest 0.01 g) of the liquid to be titrated is placed in an Erlenmeyer flask; 20 cm^3 of acetic anhydride and about 1 g of powdered solid potassium iodide are added; the flask is shaken and, after 10 minutes, heated for 3 minutes to about 60 °C. When it has been left to cool for 5 minutes, 25 cm^3 of water are added. After this, it is left standing for half an hour, then the liberated iodine is titrated with a decinormal solution of sodium thiosulphate, no indicator being added; complete discoloration indicates the end of the reaction. If n is the number of cm^3 of thiosulphate solution required, the percentage of peroxide (calculated as H_2O_2) present in the sample is obtained by the formula:

$$\frac{17n}{100p}$$

2.3.4 **Test for determining fluidity**

To determine the fluidity of liquid, viscous or pasty substances and mixtures, the following test method shall be used.

2.3.4.1 ***Test apparatus***

Commercial penetrometer conforming to ISO 2137:1985, with a guide rod of 47.5 g ± 0.05 g; sieve disc of duralumin with conical bores and a mass of 102.5 g ± 0.05 g (see Figure 1); penetration vessel with an inside diameter of 72 mm to 80 mm for reception of the sample.

2.3.4.2 ***Test procedure***

The sample is poured into the penetration vessel not less than half an hour before the measurement. The vessel is then hermetically closed and left standing until the measurement. The sample in the hermetically closed penetration vessel is heated to 35 °C ± 0.5 °C and is placed on the penetrometer table immediately prior to measurement (not more than two minutes). The point S of the sieve disc is then brought into contact with the surface of the liquid and the rate of penetration is measured.

2.3.4.3 ***Evaluation of test results***

A substance is pasty if, after the centre S has been brought into contact with the surface of the sample, the penetration indicated by the dial gauge:

(a) after a loading time of 5 s ± 0.1 s, is less than 15.0 mm ± 0.3 mm; or

(b) after a loading time of 5 s ± 0.1 s, is greater than 15.0 mm ± 0.3 mm, but the additional penetration after another 55 s ± 0.5 s is less than 5.0 mm ± 0.5 mm.

NOTE*: In the case of samples having a flow point, it is often impossible to produce a steady level surface in the penetration vessel and, hence, to establish satisfactory initial measuring conditions for the contact of the point S. Furthermore, with some samples, the impact of the sieve disc can cause an elastic deformation of the surface and, in the first few seconds, simulate a deeper penetration. In all these cases, it may be appropriate to make the evaluation in paragraph (b) above.*

Figure 1 – Penetrometer

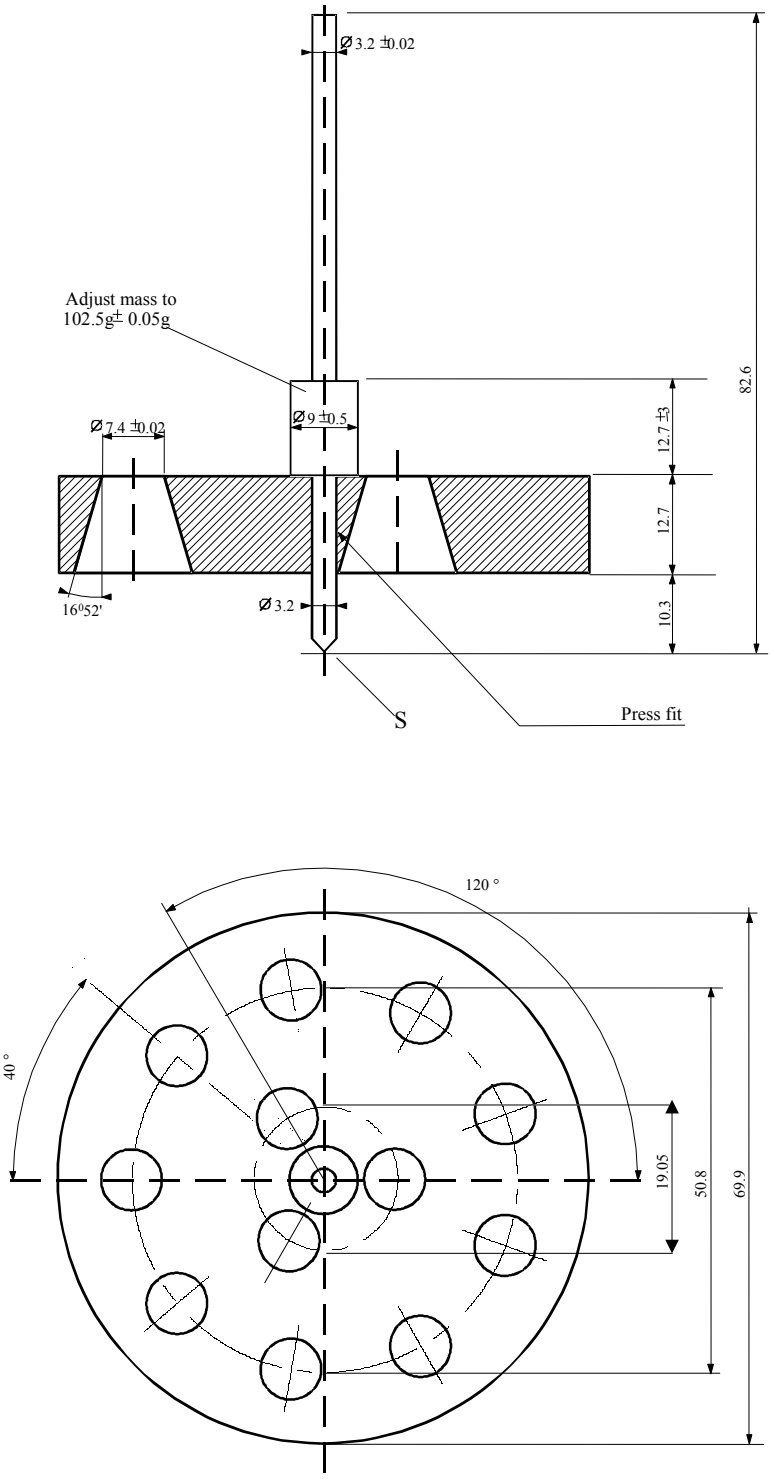

Tolerances not specified are ± 0.1 mm.

2.3.5 Test for determining the ecotoxicity, persistence and bioaccumulation of substances in the aquatic environment for assignment to Class 9

NOTE: *The test methods used shall be those adopted by the Organization for Economic Cooperation and Development (OECD) and the European Commission (EC). If other methods are used, they shall be internationally recognized, be equivalent to the OECD/EC tests and be referenced in test reports.*

2.3.5.1 *Acute toxicity for fish*

The object is to determine the concentration which causes 50% mortality in the test species; this is the (LC_{50}) value, namely, the concentration of the substance in water which will cause the death of 50% of a test group of fish during a continuous period of testing of at least 96 hours. Appropriate types of fish include: striped brill (Brachydanio rerio), fathead minnow (Pimephales promelas) and rainbow trout (Oncorhynchus mykiss).

The fish are exposed to the test substance added to the water in varying concentrations (+1 control). Observations are recorded at least every 24 hours. At the end of the 96-hour activity and, if possible, at each observation, the concentration causing the death of 50% of the fish is calculated. The no observed effect concentration (NOEC) at 96 hours is also determined.

2.3.5.2 *Acute toxicity for daphnia*

The object is to determine the effective concentration of the substance in water which renders 50% of the daphnia unable to swim (EC_{50}). The appropriate test organisms are daphnia magna and daphnia pulex. The daphnia are exposed for 48 hours to the test substance added to the water in varying concentrations. The no observed effect concentration (NOEC) at 48 hours is also determined.

2.3.5.3 *Algal growth inhibition*

The object is to determine the effect of a chemical on the growth of algae under standard conditions. The change in biomass and the rate of growth with algae under the same conditions, but without the presence of the test chemical, are compared over 72 hours. The results are expressed as the effective concentration which reduces the rate of algal growth by 50% (IC_{50r}) and also the formation of the biomass (IC_{50b}).

2.3.5.4 *Tests for ready biodegradability*

The object is to determine the degree of biodegradation under standard aerobic conditions. The test substance is added in low concentrations to a nutrient solution containing aerobic bacteria. The progress of degradation is followed for 28 days by determining the parameter specified in the test method used. Several equivalent test methods are available. The parameters include reduction of dissolved organic carbon (DOC), carbon dioxide (CO_2) generation of oxygen (O_2) depletion.

A substance is considered to be readily biodegradable if within not more than 28 days the following criteria are satisfied - within 10 days from when degradation first reaches 10%:

Reduction of DOC:	70%
Generation of CO_2:	60% of theoretical CO_2 production
Depletion of O_2:	60% of theoretical O_2 requirement.

The test may be continued beyond 28 days if the above criteria are not satisfied, but the result will represent the inherent biodegradability of the test substance. For assignment purposes, the "ready" result is normally required.

Where only COD and BOD_5 data are available, a substance is considered to be readily biodegradable if:

$$\frac{BOD_5}{COD} \geq 0.5$$

BOD (Biochemical Oxygen Demand) is defined as the mass of dissolved oxygen required by a specific volume of solution of the substance for the process of biochemical oxidation under prescribed conditions. The result is expressed as grams of BOD per gram of test substance. The normal test period is five days (BOD_5) using a national standard test procedure.

COD (Chemical Oxygen Demand) is a measure of the oxidizability of a substance, expressed as the equivalent amount in oxygen of an oxidizing reagent consumed by the substance under fixed laboratory conditions. The results are expressed in grams of COD per gram of substance. A national standard procedure may be used.

2.3.5.5 ***Tests for bioaccumulation potential***

2.3.5.5.1 The object is to determine the potential for bioaccumulation either by the ratio at equilibrium of the concentration (c) of a substance in a solvent to that in water or by the bioconcentration factor (BCF).

2.3.5.5.2 The ratio at equilibrium of the concentration (c) of a substance in a solvent to that in water is normally expressed as a $\log_{10}$. The solvent and water shall have negligible miscibility and the substance shall not ionize in water. The solvent normally used is n-octanol.

In the case of n-octanol and water, the result is:

$$\log P_{ow} = \log_{10} [c_o/c_w]$$

where P_{ow} is the partition coefficient obtained by dividing the concentration of the substance in n-octanol (c_o) by the concentration of the substance in water (C_w).

If $\log P_{ow} \geq 3.0$ then the substance has a potential to bioaccumulate.

2.3.5.5.3 The bioconcentration factor (BCF) is defined as the ratio of the concentration of the test substance in the test fish (c_f) to the concentration in the test water (c_w) at steady state:

$$BCF = (c_f) / (c_w).$$

The principle of the test involves exposing fish to a solution or dispersion at known concentrations of the test substance in water. Continuous flow, static or semi-static procedures may be used according to the test procedure selected, based on the properties of the test substances. Fish are exposed to the test substances over a given period of time, followed by a period of no further exposure. During the second period, measurements are made of the rate of increase in the water of the test substance (i.e. the rate of excretion or depuration).

(Full details of the various test procedures and the calculation method for the BCF are given in the OECD Guidelines for Testing of Chemicals, methods 305A to 305E, 12 May 1981).

2.3.5.5.4 A substance may have a $\log P_{ow}$ greater than 3 and a BCF less than 100 which would indicate little or no potential to bioaccumulate. In cases of doubt, the BCF value takes precedence over $\log P_{ow}$, as indicated in the flow chart of the procedure in 2.3.5.7.

2.3.5.6 ***Criteria***

A substance may be regarded as a pollutant to the aquatic environment if it satisfies one of the following criteria:

The lowest of the values of the 96-hour LC_{50} for fish, the 48-hour EC_{50} for daphnia or the 72-hour IC_{50} for algae

- is less than or equal to 1 mg/l;
- is greater than 1 mg/l but less than or equal to 10 mg/l, and the substance is not biodegradable;
- is greater than 1 mg/l but less than or equal to 10 mg/l, and the log P_{ow} is greater than or equal to 3.0 (unless the experimentally determined BCF is less than or equal to 100).

2.3.5.7 ***Procedure to be followed***

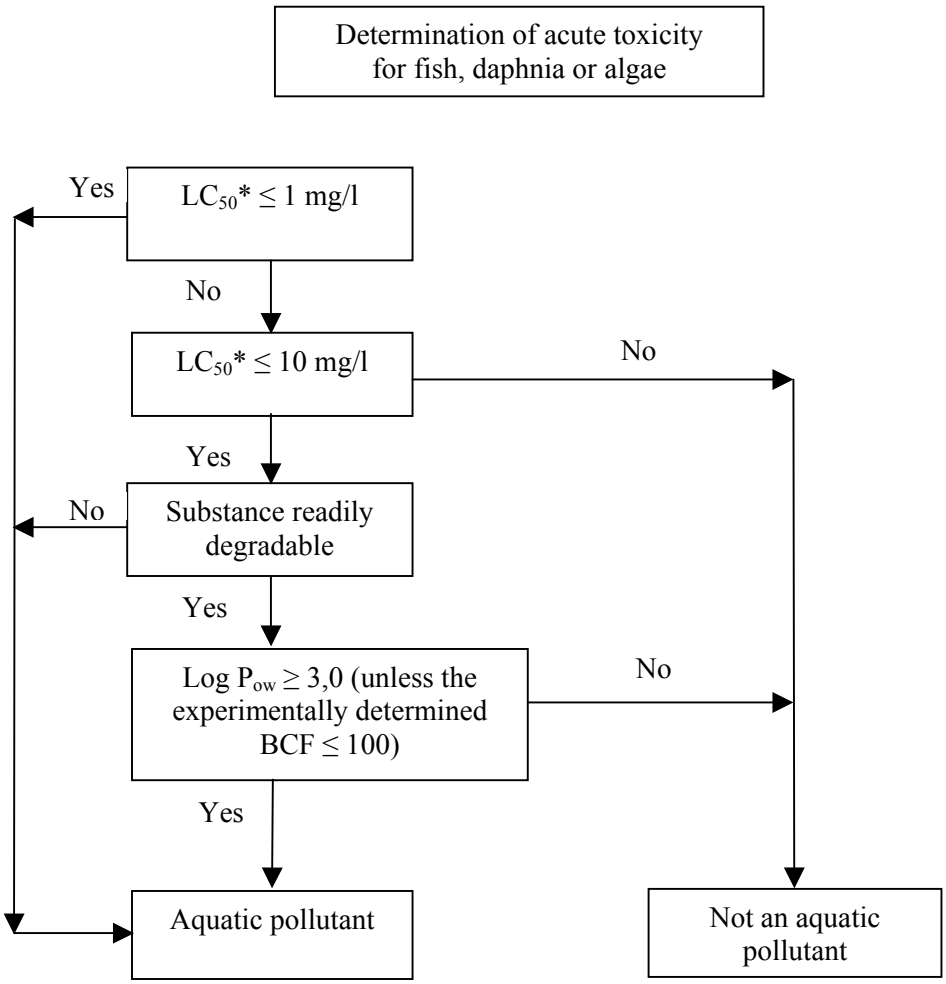

* Lowest value of 96-hour LC_{50}, 48-hour EC_{50} or 72-hour IC_{50} as appropriate.

BCF = bioconcentration factor

2.3.6 Classification of organometallic substances in Classes 4.2 and 4.3

Depending on their properties as determined in accordance with tests N.1 to N.5 of the Manual of Tests end Criteria, Part III, section 33, organometallic substances may be classified in Class 4.2 or 4.3, as appropriate, in accordance with the flowchart scheme given in Figure 2.3.6.

NOTE 1: *Depending on their other properties and on the precedence of hazard table (see 2.1.3.10), organometallic substances may have to be classified in other classes as appropriate.*

NOTE 2*:* *Flammable solutions with organometallic compounds in concentrations which are not liable to spontaneous combustion or, in contact with water, do not emit flammable gases in dangerous quantities, are substances of Class 3.*

Figure 2.3.6: Flowchart scheme for the classification of organometallic substances in Classes 4.2 and 4.3 [b]

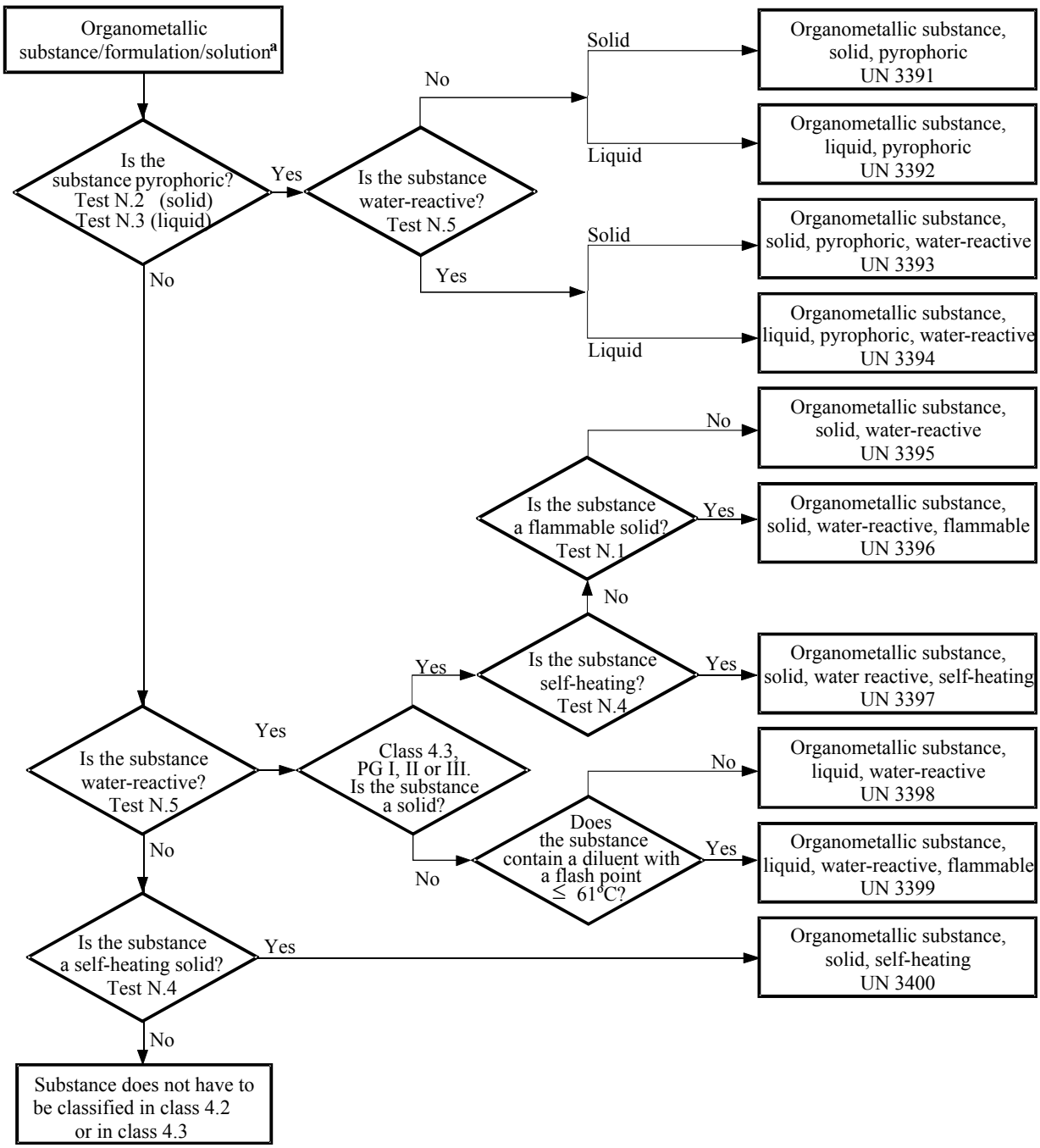

[a] *If applicable and testing is relevant, taking into account reactivity properties, class 6.1 and 8 properties should be considered according to the precedence of hazard table of 2.1.3.10.*

[b] *Test methods N.1 to N.5 can be found in the Manual of Tests and Criteria, Part III, Section 33.*

PART 3

Dangerous goods list, special provisions and exemptions related to dangerous goods packed in limited quantities

CHAPTER 3.1

GENERAL

3.1.1 Introduction

In addition to the provisions referred to or given in the tables of this Part, the general requirements of each Part, Chapter and/or Section are to be observed. These general requirements are not given in the tables. When a general requirement is contradictory to a special provision, the special provision prevails.

3.1.2 Proper shipping name

NOTE: *For proper shipping names used for the carriage of samples, see 2.1.4.1.*

3.1.2.1 The proper shipping name is that portion of the entry most accurately describing the goods in Table A in Chapter 3.2, which is shown in upper case characters (plus any numbers, Greek letters, "sec", "tert", and the letters "m", "n", "o", "p", which form an integral part of the name). An alternative proper shipping name may be shown in brackets following the main proper shipping name [e.g., ETHANOL (ETHYL ALCOHOL)]. Portions of an entry appearing in lower case need not be considered as part of the proper shipping name.

3.1.2.2 When conjunctions such as "and" or "or" are in lower case or when segments of the name are punctuated by commas, the entire name of the entry need not necessarily be shown in the transport document or package markings. This is the case particularly when a combination of several distinct entries are listed under a single UN Number. Examples illustrating the selection of the proper shipping name for such entries are:

(a) UN 1057 LIGHTERS or LIGHTER REFILLS - The proper shipping name is the most appropriate of the following possible combinations:

LIGHTERS
LIGHTER REFILLS;

(b) UN 2793 FERROUS METAL BORINGS, SHAVINGS, TURNINGS or CUTTINGS in a form liable to self-heating. The proper shipping name is the most appropriate of the following combinations:

FERROUS METAL BORINGS
FERROUS METAL SHAVINGS
FERROUS METAL TURNINGS
FERROUS METAL CUTTINGS

each supplemented with the technical name of the goods (see 3.1.2.8.1).

3.1.2.3 Proper shipping names may be used in the singular or plural as appropriate. In addition, when qualifying words are used as part of the proper shipping name, their sequence on documentation or package markings is optional. For instance, "DIMETHYLAMINE AQUEOUS SOLUTION" may alternatively be shown "AQUEOUS SOLUTION OF DIMETHYLAMINE". Commercial or military names for goods of Class 1 which contain the proper shipping name supplemented by additional descriptive text may be used.

3.1.2.4 Many substances have an entry for both the liquid and solid state (see definitions for liquid and solid in 1.2.1), or for the solid and solution. These are allocated separate UN numbers which are not necessarily adjacent to each other [1].

3.1.2.5 Unless it is already included in capital letters in the name indicated in Table A in Chapter 3.2, the qualifying word "MOLTEN" shall be added as part of the proper shipping name when a substance, which is a solid in accordance with the definition in 1.2.1, is offered for carriage in the molten state (e.g. ALKYLPHENOL, SOLID, N.O.S., MOLTEN).

3.1.2.6 Except for self-reactive substances and organic peroxides and unless it is already included in capital letters in the name indicated in Column (2) of Table A of Chapter 3.2, the word "STABILIZED" shall be added as part of the proper shipping name of a substance which without stabilization would be forbidden from carriage in accordance with paragraphs 2.2.X.2 due to it being liable to dangerously react under conditions normally encountered in carriage (e.g.: "TOXIC LIQUID, ORGANIC, N.O.S., STABILIZED").

When temperature control is used to stabilize such substances to prevent the development of any dangerous excess pressure, then:

(a) For liquids: where the SADT is less than or equal to 50 °C, the provisions of 2.2.41.1.17, the special provision V8 of Chapter 7.2, the special provision S4 of Chapter 8.5 and the requirements of Chapter 9.6 shall apply; for carriage in IBCs and tanks, all the provisions applicable to UN No. 3239 apply (see in particular 4.1.7.2, packing instruction IBC520 et 4.2.1.13);

(b) For gases: the conditions of carriage shall be approved by the competent authority.

3.1.2.7 Hydrates may be carried under the proper shipping name for the anhydrous substance.

3.1.2.8 ***Generic or "not otherwise specified" (N.O.S.) names***

3.1.2.8.1 Generic and "not otherwise specified" proper shipping names that are assigned to special provision 274 in Column (6) of Table A in Chapter 3.2 shall be supplemented with the technical name of the goods unless a national law or international convention prohibits its disclosure if it is a controlled substance. For explosives of Class 1, the dangerous goods description may be supplemented by additional descriptive text to indicate commercial or military names. Technical names shall be entered in brackets immediately following the proper shipping name. An appropriate modifier, such as "contains" or "containing" or other qualifying words such as "mixture", "solution", etc. and the percentage of the technical constituent may also be used. For example: "UN 1993 FLAMMABLE LIQUID, N.O.S. (CONTAINS XYLENE AND BENZENE), 3, II".

3.1.2.8.1.1 The technical name shall be a recognized chemical name, if relevant a biological name, or other name currently used in scientific and technical handbooks, journals and texts. Trade names shall not be used for this purpose. In the case of pesticides, only ISO common name(s), other name(s) in the World Health Organization (WHO) Recommended Classification of Pesticides by Hazard and Guidelines to Classification, or the name(s) of the active substance(s) may be used.

---

[1] *Details are provided in the alphabetical index (Table B of Chapter 3.2), e.g.:*
NITROXYLENES, LIQUID 6.1 1665;
NITROXYLENES, SOLID 6.1 3447.

3.1.2.8.1.2 When a mixture of dangerous goods is described by one of the "N.O.S." or "generic" entries to which special provision 274 has been allocated in Column (6) of Table A in Chapter 3.2, not more than the two constituents which most predominantly contribute to the hazard or hazards of a mixture need to be shown, excluding controlled substances when their disclosure is prohibited by national law or international convention. If a package containing a mixture is labelled with any subsidiary risk label, one of the two technical names shown in parentheses shall be the name of the constituent which compels the use of the subsidiary risk label.

***NOTE**: see 5.4.1.2.2.*

3.1.2.8.1.3 Examples illustrating the selection of the proper shipping name supplemented with the technical name of goods for such N.O.S. entries are:

UN 2902 PESTICIDE, LIQUID, TOXIC, N.O.S. (drazoxolon);
UN 3394 ORGANOMETALLIC SUBSTANCE, LIQUID, PYROPHORIC, WATER-REACTIVE (trimethylgallium).

3.1.2.9 ***Mixtures and solutions containing one dangerous substance***

When mixtures and solutions have to be regarded as the dangerous substance mentioned by name in accordance with the classification requirements of 2.1.3.3, the qualifying word "SOLUTION" or "MIXTURE", as appropriate, shall be added as part of the proper shipping name, e.g. "ACETONE SOLUTION". In addition, the concentration of the solution or mixture may also be indicated, e.g. "ACETONE 75% SOLUTION".

CHAPTER 3.2

DANGEROUS GOODS LIST

3.2.1 Table A: Dangerous Goods List

Explanations

As a rule, each row of Table A of this Chapter deals with the substance(s) or article(s) covered by a specific UN number. However, when substances or articles belonging to the same UN number have different chemical properties, physical properties and/or carriage conditions, several consecutive rows may be used for that UN number.

Each column of Table A is dedicated to a specific subject as indicated in the explanatory notes below. The intersection of columns and rows (cell) contains information concerning the subject treated in that column, for the substance(s) or article(s) of that row:

- The first four cells identify the substance(s) or article(s) belonging to that row (additional information in that respect may be given by the special provisions referred to in Column (6);

- The following cells give the applicable special provisions, either in the form of complete information or in coded form. The codes cross-refer to detailed information that is to be found in the Part, Chapter, Section and/or Sub-section indicated in the explanatory notes below. An empty cell means either that there is no special provision and that only the general requirements apply, or that the carriage restriction indicated in the explanatory notes is in force.

The applicable general requirements are not referred to in the corresponding cells. The explanatory notes below indicate for every column the Part(s), Chapter(s), Section(s) and/or Sub-section(s) where these are to be found.

Explanatory notes for each column:

Column (1) "UN No."

Contains the UN number:

- of the dangerous substance or article if the substance or article has been assigned its own specific UN number; or

- of the generic or n.o.s. entry to which the dangerous substances or articles not mentioned by name shall be assigned in accordance with the criteria ("decision trees") of Part 2.

Column (2) "Name and description"

Contains, in upper case characters, the name of the substance or article, if the substance or article has been assigned its own specific UN number, or of the generic or n.o.s. entry to which it has been assigned in accordance with the criteria ("decision trees") of Part 2. This name shall be used as the proper shipping name or, when applicable, as part of the proper shipping name (see 3.1.2 for further details on the proper shipping name).

A descriptive text in lower case characters is added after the proper shipping name to clarify the scope of the entry if the classification and/or carriage conditions of the substance or article may be different under certain conditions.

Column (3a) "Class"

Contains the number of the Class, whose heading covers the dangerous substance or article. This Class number is assigned in accordance with the procedures and criteria of Part 2.

Column (3b) "Classification code"

Contains the classification code of the dangerous substance or article.

- For dangerous substances or articles of Class 1, the code consists of a division number and compatibility group letter, which are assigned in accordance with the procedures and criteria of 2.2.1.1.4;

- For dangerous substances or articles of Class 2, the code consists of a number and hazardous property group, which are explained in 2.2.2.1.2 and 2.2.2.1.3;

- For dangerous substances or articles of Classes 3, 4.1, 4.2, 4.3, 5.1, 5.2, 6.1, 6.2, 8 and 9, the codes are explained in 2.2.x.1.2 [1];

- Dangerous substances or articles of Class 7 do not have a classification code.

Column (4) "Packing group"

Contains the packing group number(s) (I, II or III) assigned to the dangerous substance. These packing group numbers are assigned on the basis of the procedures and criteria of Part 2. Certain articles and substances are not assigned to packing groups.

Column (5) "Labels"

Contains the model number of the labels/placards (see 5.2.2.2 and 5.3.1.7) that have to be affixed to packages, containers, tank-containers, portable tanks, MEGCs and vehicles. However:

- For substances or articles of Class 7, 7X means label model No.7A, 7B or 7C as appropriate according to the category (see 2.2.7.8.4 and 5.2.2.1.11.1) or placard No. 7D (see 5.3.1.1.3 and 5.3.1.7.2);

- Labels of model number 11 are not indicated in this column; 5.2.2.1.12 is to be consulted in every case.

The general provisions on labelling/placarding (e.g. number of labels, their location) are to be found in 5.2.2.1 for packages, and in 5.3.1, for containers, tank-containers, MEGCs, portable tanks and vehicles.

[1] *x = the Class number of the dangerous substance or article, without dividing point if applicable.*

***NOTE**: Special provisions, indicated in Column (6), may change the above labelling provisions.*

Column (6) "Special provisions"

Contains the numeric codes of special provisions that have to be met. These provisions concern a wide array of subjects, mainly connected with the contents of Columns (1) to (5) (e.g. carriage prohibitions, exemptions from requirements, explanations concerning the classification of certain forms of the dangerous goods concerned and additional labelling or marking provisions), and are listed in Chapter 3.3 in numerical order. If Column (6) is empty, no special provisions apply to the contents of Columns (1) to (5) for the dangerous goods concerned.

Column (7) "Limited quantities"

Contains an alphanumeric code with the following meaning:

- "LQ0" signifies that no exemption from the provisions of ADR exists for the dangerous goods packed in limited quantities;

- All the other alphanumeric codes starting with the letters "LQ" signify that the provisions of ADR are not applicable if the conditions indicated in Chapter 3.4 are fulfilled (general conditions of 3.4.1 and conditions of 3.4.3, 3.4.4, 3.4.5 and 3.4.6, as appropriate, for the relevant code).

Column (8) "Packing instructions"

Contains the alphanumeric codes of the applicable packing instructions:

- Alphanumeric codes starting with the letter "P", which refers to packing instructions for packagings and receptacles (except IBCs and large packagings), or "R", which refers to packing instructions for light gauge metal packagings. These are listed in 4.1.4.1 in numerical order, and specify the packagings and receptacles that are authorized. They also indicate which of the general packing provisions of 4.1.1, 4.1.2 and 4.1.3, and which of the special packing provisions of 4.1.5, 4.1.6, 4.1.7, 4.1.8 and 4.1.9 have to be met. If Column (8) does not contain a code starting with the letters "P" or "R", the dangerous goods concerned may not be carried in packagings;

- Alphanumeric codes starting with the letters "IBC" refer to packing instructions for IBCs. These are listed in 4.1.4.2 in numerical order, and specify the IBCs that are authorized. They also indicate which of the general packing provisions of 4.1.1, 4.1.2 and 4.1.3, and which of the special packing provisions of 4.1.5, 4.1.6, 4.1.7, 4.1.8 and 4.1.9 have to be met. If Column (8) does not contain a code starting with the letters "IBC", the dangerous goods concerned may not be carried in IBCs;

- Alphanumeric codes starting with the letters "LP" refer to packing instructions for large packagings. These are listed in 4.1.4.3 in numerical order, and specify the large packagings that are authorized. They also indicate which of the general packing provisions of 4.1.1, 4.1.2 and 4.1.3, and which of the special packing

provisions of 4.1.5, 4.1.6, 4.1.7, 4.1.8 and 4.1.9 have to be met. If Column (8) does not contain a code starting with the letters "LP", the dangerous goods concerned cannot be carried in large packagings;

- Alphanumerical codes starting with letters "PR" refer to packing instructions for particular pressure receptacles. These are listed in 4.1.4.4 in numerical order, and specify the pressure receptacles that are authorized. They also indicate which of the general packing provisions of 4.1.1, 4.1.2 and 4.1.3, and which of the special packing provisions of 4.1.5, 4.1.6, 4.1.7, 4.1.8 and 4.1.9 have to be met.

***NOTE**: Special packing provisions, indicated in Column (9a), may change the above packing instructions.*

Column (9a) "Special packing provisions"

Contains the alphanumeric codes of the applicable special packing provisions:

- Alphanumeric codes starting with the letters "PP" or "RR" refer to special packing provisions for packagings and receptacles (except IBCs and large packagings) that have additionally to be met. These are to be found in 4.1.4.1, at the end of the relevant packing instruction (with the letter "P" or "R") referred to in Column (8). If Column (9a) does not contain a code starting with the letters "PP" or "RR", none of the special packing provisions listed at the end of the relevant packing instruction apply;

- Alphanumeric codes starting with the letter "B" or the letters "BB" refer to special packing provisions for IBCs that have additionally to be met. These are to be found in 4.1.4.2, at the end of the relevant packing instruction (with the letters "IBC") referred to in Column (8). If Column (9a) does not contain a code starting with the letter "B" or the letters "BB", none of the special packing provisions listed at the end of the relevant packing instruction apply;

- Alphanumeric codes starting with the letter "L" refer to special packing provisions for large packagings that have additionally to be met. These are to be found in 4.1.4.3, at the end of the relevant packing instruction (with the letters "LP") referred to in Column (8). If Column (9a) does not contain a code starting with the letter "L", none of the special packing provisions listed at the end of the relevant packing instruction apply.

Column (9b) "Mixed packing provisions"

Contains the alphanumeric codes starting with the letters "MP" of the applicable mixed packing provisions. These are listed in 4.1.10 in numerical order. If Column (9b) does not contain a code starting with the letters "MP", only the general requirements apply (see 4.1.1.5 and 4.1.1.6).

Column (10) "Portable tank and bulk container instructions"

Contains an alphanumeric code assigned to a portable tank instruction, in accordance with 4.2.5.2.1 to 4.2.5.2.4 and 4.2.5.2.6. This portable tank

instruction corresponds to the least stringent provisions that are acceptable for the carriage of the substance in portable tanks. The codes identifying the other portable tank instructions that are also permitted for the carriage of the substance are to be found in 4.2.5.2.5. If no code is given, carriage in portable tanks is not permitted unless a competent authority approval is granted as detailed in 6.7.1.3.

The general requirements for the design, construction, equipment, type approval, testing and marking of portable tanks are to be found in Chapter 6.7. The general requirements for the use (e.g. filling) are to be found in 4.2.1 to 4.2.4.

The indication of a "(M)" means that the substance may be carried in UN MEGCs.

***NOTE**: Special provisions, indicated in Column (11), may change the above requirements.*

May also contain alphanumeric codes starting with the letters "BK" referring to types of bulk containers described in Chapter 6.11 which may be used for the carriage of bulk goods in accordance with 7.3.1.1 (a) and 7.3.2.

Column (11) "Portable tank and bulk container special provisions"

Contains the alphanumeric codes of the portable tank special provisions that have additionally to be met. These codes, starting with the letters "TP" refer to special provisions for the construction or use of these portable tanks. They are to be found in 4.2.5.3.

Column (12) "Tank codes for ADR tanks"

Contains an alphanumeric code describing a tank type, in accordance with 4.3.3.1.1 (for gases of Class 2) or 4.3.4.1.1 (for substances of Classes 3 to 9). This tank type corresponds to the least stringent tank provisions that are acceptable for the carriage of the relevant substance in ADR tanks. The codes describing the other permitted tank types are to be found in 4.3.3.1.2 (for gases of Class 2) or 4.3.4.1.2 (for substances of Classes 3 to 9). If no code is given, carriage in ADR tanks is not permitted.

If in this column a tank code for solids (S) and for liquids (L) is indicated, this means that this substance may be offered for carriage in tanks in the solid or the liquid (molten) state. In general this provision is applicable to substances having melting points from 20 °C to 180 °C.

If for a solid, only a tank code for liquids (L) is indicated in this column, this means that this substance is only offered for carriage in tanks in the liquid (molten) state.

The general requirements for the construction, equipment, type approval, testing and marking that are not indicated in the tank code are to be found in 6.8.1, 6.8.2, 6.8.3 and 6.8.5. The general requirements for the use (e.g. maximum degree of filling, minimum test pressure) are to be found in 4.3.1 to 4.3.4.

The indication of a "(M)" after the tank code means that the substance can also be carried in battery-vehicles or MEGCs.

The indication of a (+) after the tank code means that the alternative use of the tanks is permitted only where this is specified in the certificate of type approval.

For fibre-reinforced plastic tanks, see 4.4.1 and Chapter 6.9; for vacuum operated waste tanks, see 4.5.1 and Chapter 6.10.

***NOTE**: Special provisions, indicated in Column (13), may change the above requirements.*

Column (13) "Special provisions for ADR tanks"

Contains the alphanumeric codes of the special provisions for ADR tanks that have additionally to be met:

- Alphanumeric codes starting with the letters "TU" refer to special provisions for the use of these tanks. These are to be found in 4.3.5;

- Alphanumeric codes starting with the letters "TC" refer to special provisions for the construction of these tanks. These are to be found in 6.8.4 (a);

- Alphanumeric codes starting with the letters "TE" refer to special provisions concerning the items of equipment of these tanks. These are to be found in 6.8.4 (b);

- Alphanumeric codes starting with the letters "TA" refer to special provisions for the type approval of these tanks. These are to be found in 6.8.4 (c);

- Alphanumeric codes starting with the letters "TT" refer to special provisions for the testing of these tanks. These are to be found in 6.8.4 (d);

- Alphanumeric codes starting with the letters "TM" refer to special provisions for the marking of these tanks. These are to be found in 6.8.4 (e).

Column (14) "Vehicle for tank carriage"

Contains a code designating the vehicle (see 9.1.1) to be used for the carriage of the substance in tank in accordance with 7.4.2. The requirements concerning the construction and approval of vehicles are to be found in Chapters 9.1, 9.2 and 9.7.

Column (15) "Transport category"

Contains a figure indicating the transport category to which the substance or article is assigned for the purposes of exemption related to quantities carried per transport unit (see 1.1.3.6).

Column (16) "Special provisions for carriage - Packages"

Contains the alphanumeric code(s), starting with letter "V", of the applicable special provisions (if any) for carriage in packages. These are listed in 7.2.4. General provisions concerning the carriage in packages are to be found in Chapters 7.1 and 7.2.

***NOTE**: In addition, special provisions indicated in Column (18), concerning loading, unloading and handling, shall be observed.*

Column (17) "Special provisions for carriage - Bulk"

Contains the alphanumeric code(s), starting with letters "VV", of the applicable special provisions for carriage in bulk. These are listed in 7.3.3. If no code is given, carriage in bulk is not permitted. General Provisions concerning the carriage in bulk are to be found in Chapters 7.1 and 7.3.

***NOTE**: In addition, special provisions indicated in Column (18), concerning loading, unloading and handling, shall be observed.*

Column (18) "Special provisions for carriage - Loading and unloading"

Contains the alphanumeric code(s), starting with letters "CV", of the applicable special provisions for loading, unloading and handling. These are listed in 7.5.11. If no code is given, only the general provisions apply (see 7.5.1 to 7.5.10).

Column (19) "Special provisions for carriage - Operation"

Contains the alphanumeric code(s), starting with letter "S", of the applicable special provisions for operation which are listed in Chapter 8.5. These provisions shall be applied in addition to the requirements of Chapters 8.1 to 8.4 but in the event of conflict with the requirements of Chapters 8.1 to 8.4, the special provisions shall take precedence.

Column (20) "Hazard identification number"

Contains a two or three figures number (in some cases prefixed by the letter "X") which shall appear on the upper part of the orange-coloured plate when required for carriage in tank or in bulk according to 5.3.2.1. The meaning of the hazard identification numbers is explained in 5.3.2.3.

UN No.	Name and description	Class	Classification code	Packing group	Labels	Special provisions	Limited quantities	Packaging			Portable tanks and bulk containers	
								Packing instructions	Special packing provisions	Mixed packing provisions	Instructions	Special provisions
	3.1.2	2.2	2.2	2.1.1.3	5.2.2	3.3	3.4.6	4.1.4	4.1.4	4.1.10	4.2.5.2 7.3.2	4.2.5.3
(1)	(2)	(3a)	(3b)	(4)	(5)	(6)	(7)	(8)	(9a)	(9b)	(10)	(11)
0004	AMMONIUM PICRATE dry or wetted with less than 10% water, by mass	1	1.1D		1		LQ0	P112(a)(b)(c)	PP26	MP20		
0005	CARTRIDGES FOR WEAPONS with bursting charge	1	1.1F		1		LQ0	P130		MP23		
0006	CARTRIDGES FOR WEAPONS with bursting charge	1	1.1E		1		LQ0	P130 LP101	PP67 L1	MP21		
0007	CARTRIDGES FOR WEAPONS with bursting charge	1	1.2F		1		LQ0	P130		MP23		
0009	AMMUNITION, INCENDIARY with or without burster, expelling charge or propelling charge	1	1.2G		1		LQ0	P130 LP101	PP67 L1	MP23		
0010	AMMUNITION, INCENDIARY with or without burster, expelling charge or propelling charge	1	1.3G		1		LQ0	P130 LP101	PP67 L1	MP23		
0012	CARTRIDGES FOR WEAPONS, INERT PROJECTILE or CARTRIDGES, SMALL ARMS	1	1.4S		1.4		LQ0	P130		MP23 MP24		
0014	CARTRIDGES FOR WEAPONS, BLANK or CARTRIDGES, SMALL ARMS, BLANK	1	1.4S		1.4		LQ0	P130		MP23 MP24		
0015	AMMUNITION, SMOKE with or without burster, expelling charge or propelling charge	1	1.2G		1	204	LQ0	P130 LP101	PP67 L1	MP23		
0016	AMMUNITION, SMOKE with or without burster, expelling charge or propelling charge	1	1.3G		1	204	LQ0	P130 LP101	PP67 L1	MP23		
0018	AMMUNITION, TEAR-PRODUCING with burster, expelling charge or propelling charge	1	1.2G		1+ 6.1 +8		LQ0	P130 LP101	PP67 L1	MP23		
0019	AMMUNITION, TEAR-PRODUCING with burster, expelling charge or propelling charge	1	1.3G		1 +6.1 +8		LQ0	P130 LP101	PP67 L1	MP23		
0020	AMMUNITION, TOXIC with burster, expelling charge or propelling charge	1	1.2K	CARRIAGE PROHIBITED								
0021	AMMUNITION, TOXIC with burster, expelling charge or propelling charge	1	1.3K	CARRIAGE PROHIBITED								
0027	BLACK POWDER (GUNPOWDER), granular or as a meal	1	1.1D		1		LQ0	P113	PP50	MP20 MP24		
0028	BLACK POWDER (GUNPOWDER), COMPRESSED or BLACK POWDER (GUNPOWDER), IN PELLETS	1	1.1D		1		LQ0	P113	PP51	MP20 MP24		
0029	DETONATORS, NON-ELECTRIC for blasting	1	1.1B		1		LQ0	P131	PP68	MP23		
0030	DETONATORS, ELECTRIC for blasting	1	1.1B		1		LQ0	P131		MP23		

ADR tank		Vehicle for tank carriage	Transport category	Special provisions for carriage				Hazard identifi-cation No.	UN No.	Name and description
Tank code	Special provisions			Packages	Bulk	Loading, unloading and handling	Operation			
4.3	4.3.5, 6.8.4	9.1.1.2	1.1.3.6	7.2.4	7.3.3	7.5.11	8.5	5.3.2.3		3.1.2
(12)	(13)	(14)	(15)	(16)	(17)	(18)	(19)	(20)	(1)	(2)
			1	V2 V3		CV1 CV2 CV3	S1		0004	AMMONIUM PICRATE dry or wetted with less than 10% water, by mass
			1	V2		CV1 CV2 CV3	S1		0005	CARTRIDGES FOR WEAPONS with bursting charge
			1	V2		CV1 CV2 CV3	S1		0006	CARTRIDGES FOR WEAPONS with bursting charge
			1	V2		CV1 CV2 CV3	S1		0007	CARTRIDGES FOR WEAPONS with bursting charge
			1	V2		CV1 CV2 CV3	S1		0009	AMMUNITION, INCENDIARY with or without burster, expelling charge or propelling charge
			1	V2		CV1 CV2 CV3	S1		0010	AMMUNITION, INCENDIARY with or without burster, expelling charge or propelling charge
			4	V2		CV1 CV2 CV3	S1		0012	CARTRIDGES FOR WEAPONS, INERT PROJECTILE or CARTRIDGES, SMALL ARMS
			4	V2		CV1 CV2 CV3	S1		0014	CARTRIDGES FOR WEAPONS, BLANK or CARTRIDGES, SMALL ARMS, BLANK
			1	V2		CV1 CV2 CV3	S1		0015	AMMUNITION, SMOKE with or without burster, expelling charge or propelling charge
			1	V2		CV1 CV2 CV3	S1		0016	AMMUNITION, SMOKE with or without burster, expelling charge or propelling charge
			1	V2		CV1 CV2 CV3 CV28	S1		0018	AMMUNITION, TEAR-PRODUCING with burster, expelling charge or propelling charge
			1	V2		CV1 CV2 CV3 CV28	S1		0019	AMMUNITION, TEAR-PRODUCING with burster, expelling charge or propelling charge
CARRIAGE PROHIBITED									0020	AMMUNITION, TOXIC with burster, expelling charge or propelling charge
CARRIAGE PROHIBITED									0021	AMMUNITION, TOXIC with burster, expelling charge or propelling charge
			1	V2 V3		CV1 CV2 CV3	S1		0027	BLACK POWDER (GUNPOWDER), granular or as a meal
			1	V2		CV1 CV2 CV3	S1		0028	BLACK POWDER (GUNPOWDER), COMPRESSED or BLACK POWDER (GUNPOWDER), IN PELLETS
			1	V2		CV1 CV2 CV3	S1		0029	DETONATORS, NON-ELECTRIC for blasting
			1	V2		CV1 CV2 CV3	S1		0030	DETONATORS, ELECTRIC for blasting

UN No.	Name and description	Class	Classification code	Packing group	Labels	Special provisions	Limited quantities	Packaging			Portable tanks and bulk containers	
								Packing instructions	Special packing provisions	Mixed packing provisions	Instructions	Special provisions
	3.1.2	2.2	2.2	2.1.1.3	5.2.2	3.3	3.4.6	4.1.4	4.1.4	4.1.10	4.2.5.2 7.3.2	4.2.5.3
(1)	(2)	(3a)	(3b)	(4)	(5)	(6)	(7)	(8)	(9a)	(9b)	(10)	(11)
0033	BOMBS with bursting charge	1	1.1F		1		LQ0	P130		MP23		
0034	BOMBS with bursting charge	1	1.1D		1		LQ0	P130 LP101	PP67 L1	MP21		
0035	BOMBS with bursting charge	1	1.2D		1		LQ0	P130 LP101	PP67 L1	MP21		
0037	BOMBS, PHOTO-FLASH	1	1.1F		1		LQ0	P130		MP23		
0038	BOMBS, PHOTO-FLASH	1	1.1D		1		LQ0	P130 LP101	PP67 L1	MP21		
0039	BOMBS, PHOTO-FLASH	1	1.2G		1		LQ0	P130 LP101	PP67 L1	MP23		
0042	BOOSTERS without detonator	1	1.1D		1		LQ0	P132(a) or (b)		MP21		
0043	BURSTERS, explosive	1	1.1D		1		LQ0	P133	PP69	MP21		
0044	PRIMERS, CAP TYPE	1	1.4S		1.4		LQ0	P133		MP23 MP24		
0048	CHARGES, DEMOLITION	1	1.1D		1		LQ0	P130 LP101	PP67 L1	MP21		
0049	CARTRIDGES, FLASH	1	1.1G		1		LQ0	P135		MP23		
0050	CARTRIDGES, FLASH	1	1.3G		1		LQ0	P135		MP23		
0054	CARTRIDGES, SIGNAL	1	1.3G		1		LQ0	P135		MP23 MP24		
0055	CASES, CARTRIDGE, EMPTY, WITH PRIMER	1	1.4S		1.4		LQ0	P136		MP23		
0056	CHARGES, DEPTH	1	1.1D		1		LQ0	P130 LP101	PP67 L1	MP21		
0059	CHARGES, SHAPED without detonator	1	1.1D		1		LQ0	P137	PP70	MP21		
0060	CHARGES, SUPPLEMENTARY, EXPLOSIVE	1	1.1D		1		LQ0	P132(a) or (b)		MP21		
0065	CORD, DETONATING, flexible	1	1.1D		1		LQ0	P139	PP71 PP72	MP21		
0066	CORD, IGNITER	1	1.4G		1.4		LQ0	P140		MP23		
0070	CUTTERS, CABLE, EXPLOSIVE	1	1.4S		1.4		LQ0	P134 LP102		MP23		
0072	CYCLOTRIMETHYLENE-TRINITRAMINE (CYCLONITE; HEXOGEN; RDX), WETTED with not less than 15% water, by mass	1	1.1D		1	266	LQ0	P112 (a)	PP45	MP20		

ADR tank		Vehicle for tank carriage	Transport category	Special provisions for carriage				Hazard identification No.	UN No.	Name and description
Tank code	Special provisions			Packages	Bulk	Loading, unloading and handling	Operation			
4.3	4.3.5, 6.8.4	9.1.1.2	1.1.3.6	7.2.4	7.3.3	7.5.11	8.5	5.3.2.3		3.1.2
(12)	(13)	(14)	(15)	(16)	(17)	(18)	(19)	(20)	(1)	(2)
			1	V2		CV1 CV2 CV3	S1		0033	BOMBS with bursting charge
			1	V2		CV1 CV2 CV3	S1		0034	BOMBS with bursting charge
			1	V2		CV1 CV2 CV3	S1		0035	BOMBS with bursting charge
			1	V2		CV1 CV2 CV3	S1		0037	BOMBS, PHOTO-FLASH
			1	V2		CV1 CV2 CV3	S1		0038	BOMBS, PHOTO-FLASH
			1	V2		CV1 CV2 CV3	S1		0039	BOMBS, PHOTO-FLASH
			1	V2		CV1 CV2 CV3	S1		0042	BOOSTERS without detonator
			1	V2		CV1 CV2 CV3	S1		0043	BURSTERS, explosive
			4	V2		CV1 CV2 CV3	S1		0044	PRIMERS, CAP TYPE
			1	V2		CV1 CV2 CV3	S1		0048	CHARGES, DEMOLITION
			1	V2		CV1 CV2 CV3	S1		0049	CARTRIDGES, FLASH
			1	V2		CV1 CV2 CV3	S1		0050	CARTRIDGES, FLASH
			1	V2		CV1 CV2 CV3	S1		0054	CARTRIDGES, SIGNAL
			4	V2		CV1 CV2 CV3	S1		0055	CASES, CARTRIDGE, EMPTY, WITH PRIMER
			1	V2		CV1 CV2 CV3	S1		0056	CHARGES, DEPTH
			1	V2		CV1 CV2 CV3	S1		0059	CHARGES, SHAPED without detonator
			1	V2		CV1 CV2 CV3	S1		0060	CHARGES, SUPPLEMENTARY, EXPLOSIVE
			1	V2		CV1 CV2 CV3	S1		0065	CORD, DETONATING, flexible
			2	V2		CV1 CV2 CV3	S1		0066	CORD, IGNITER
			4	V2		CV1 CV2 CV3	S1		0070	CUTTERS, CABLE, EXPLOSIVE
			1	V2		CV1 CV2 CV3	S1		0072	CYCLOTRIMETHYLENE-TRINITRAMINE (CYCLONITE; HEXOGEN; RDX), WETTED with not less than 15% water, by mass

UN No.	Name and description	Class	Classification code	Packing group	Labels	Special provisions	Limited quantities	Packaging			Portable tanks and bulk containers	
								Packing instructions	Special packing provisions	Mixed packing provisions	Instructions	Special provisions
	3.1.2	2.2	2.2	2.1.1.3	5.2.2	3.3	3.4.6	4.1.4	4.1.4	4.1.10	4.2.5.2 7.3.2	4.2.5.3
(1)	(2)	(3a)	(3b)	(4)	(5)	(6)	(7)	(8)	(9a)	(9b)	(10)	(11)
0073	DETONATORS FOR AMMUNITION	1	1.1B		1		LQ0	P133		MP23		
0074	DIAZODINITROPHENOL, WETTED with not less than 40% water, or mixture of alcohol and water, by mass	1	1.1A		1	266	LQ0	P110 (b)	PP42	MP20		
0075	DIETHYLENEGLYCOL DINITRATE, DESENSITIZED with not less than 25% non-volatile, water-insoluble phlegmatizer, by mass	1	1.1D		1	266	LQ0	P115	PP53 PP54 PP57 PP58	MP20		
0076	DINITROPHENOL, dry or wetted with less than 15% water, by mass	1	1.1D		1 +6.1		LQ0	P112 (a) (b)(c)	PP26	MP20		
0077	DINITROPHENOLATES, alkali metals, dry or wetted with less than 15% water, by mass	1	1.3C		1 +6.1		LQ0	P114 (a) (b)	PP26	MP20		
0078	DINITRORESORCINOL, dry or wetted with less than 15% water, by mass	1	1.1D		1		LQ0	P112(a) (b)(c)	PP26	MP20		
0079	HEXANITRODIPHENYL-AMINE (DIPICRYLAMINE; HEXYL)	1	1.1D		1		LQ0	P112(b) (c)		MP20		
0081	EXPLOSIVE, BLASTING, TYPE A	1	1.1D		1	616 617	LQ0	P116	PP63 PP66	MP20		
0082	EXPLOSIVE, BLASTING, TYPE B	1	1.1D		1	617	LQ0	P116 IBC100	PP61 PP62 PP65 B9	MP20		
0083	EXPLOSIVE, BLASTING, TYPE C	1	1.1D		1	267 617	LQ0	P116		MP20		
0084	EXPLOSIVE, BLASTING, TYPE D	1	1.1D		1	617	LQ0	P116		MP20		
0092	FLARES, SURFACE	1	1.3G		1		LQ0	P135		MP23		
0093	FLARES, AERIAL	1	1.3G		1		LQ0	P135		MP23		
0094	FLASH POWDER	1	1.1G		1		LQ0	P113	PP49	MP20		
0099	FRACTURING DEVICES, EXPLOSIVE without detonator, for oil wells	1	1.1D		1		LQ0	P134 LP102		MP21		
0101	FUSE, NON-DETONATING	1	1.3G		1		LQ0	P140	PP74 PP75	MP23		
0102	CORD (FUSE), DETONATING, metal clad	1	1.2D		1		LQ0	P139	PP71	MP21		
0103	FUSE, IGNITER, tubular, metal clad	1	1.4G		1.4		LQ0	P140		MP23		
0104	CORD (FUSE), DETONATING, MILD EFFECT, metal clad	1	1.4D		1.4		LQ0	P139	PP71	MP21		

ADR tank		Vehicle for tank carriage	Transport category	Special provisions for carriage				Hazard identification No.	UN No.	Name and description
Tank code	Special provisions			Packages	Bulk	Loading, unloading and handling	Operation			
4.3	4.3.5, 6.8.4	9.1.1.2	1.1.3.6	7.2.4	7.3.3	7.5.11	8.5	5.3.2.3		3.1.2
(12)	(13)	(14)	(15)	(16)	(17)	(18)	(19)	(20)	(1)	(2)
			1	V2		CV1 CV2 CV3	S1		0073	DETONATORS FOR AMMUNITION
			0	V2		CV1 CV2 CV3	S1		0074	DIAZODINITROPHENOL, WETTED with not less than 40% water, or mixture of alcohol and water, by mass
			1	V2		CV1 CV2 CV3	S1		0075	DIETHYLENEGLYCOL DINITRATE, DESENSITIZED with not less than 25% non-volatile, water-insoluble phlegmatizer, by mass
			1	V2 V3		CV1 CV2 CV3 CV28	S1		0076	DINITROPHENOL, dry or wetted with less than 15% water, by mass
			1	V2 V3		CV1 CV2 CV3 CV28	S1		0077	DINITROPHENOLATES, alkali metals, dry or wetted with less than 15% water, by mass
			1	V2 V3		CV1 CV2 CV3	S1		0078	DINITRORESORCINOL, dry or wetted with less than 15% water, by mass
			1	V2 V3		CV1 CV2 CV3	S1		0079	HEXANITRODIPHENYL-AMINE (DIPICRYLAMINE; HEXYL)
			1	V2 V3		CV1 CV2 CV3	S1		0081	EXPLOSIVE, BLASTING, TYPE A
			1	V2 V3		CV1 CV2 CV3	S1		0082	EXPLOSIVE, BLASTING, TYPE B
			1	V2 V3		CV1 CV2 CV3	S1		0083	EXPLOSIVE, BLASTING, TYPE C
			1	V2		CV1 CV2 CV3	S1		0084	EXPLOSIVE, BLASTING, TYPE D
			1	V2		CV1 CV2 CV3	S1		0092	FLARES, SURFACE
			1	V2		CV1 CV2 CV3	S1		0093	FLARES, AERIAL
			1	V2 V3		CV1 CV2 CV3	S1		0094	FLASH POWDER
			1	V2		CV1 CV2 CV3	S1		0099	FRACTURING DEVICES, EXPLOSIVE without detonator, for oil wells
			1	V2		CV1 CV2 CV3	S1		0101	FUSE, NON-DETONATING
			1	V2		CV1 CV2 CV3	S1		0102	CORD (FUSE), DETONATING, metal clad
			2	V2		CV1 CV2 CV3	S1		0103	FUSE, IGNITER, tubular, metal clad
			2	V2		CV1 CV2 CV3	S1		0104	CORD (FUSE), DETONATING, MILD EFFECT, metal clad

UN No.	Name and description	Class	Classification code	Packing group	Labels	Special provisions	Limited quantities	Packaging			Portable tanks and bulk containers	
								Packing instructions	Special packing provisions	Mixed packing provisions	Instructions	Special provisions
	3.1.2	2.2	2.2	2.1.1.3	5.2.2	3.3	3.4.6	4.1.4	4.1.4	4.1.10	4.2.5.2 7.3.2	4.2.5.3
(1)	(2)	(3a)	(3b)	(4)	(5)	(6)	(7)	(8)	(9a)	(9b)	(10)	(11)
0105	FUSE, SAFETY	1	1.4S		1.4		LQ0	P140	PP73	MP23		
0106	FUZES, DETONATING	1	1.1B		1		LQ0	P141		MP23		
0107	FUZES, DETONATING	1	1.2B		1		LQ0	P141		MP23		
0110	GRENADES, PRACTICE, hand or rifle	1	1.4S		1.4		LQ0	P141		MP23		
0113	GUANYLNITROSAMINO-GUANYLIDENE HYDRAZINE, WETTED with not less than 30% water, by mass	1	1.1A		1	266	LQ0	P110(b)	PP42	MP20		
0114	GUANYLNITROSAMINO-GUANYLTETRAZENE (TETRAZENE), WETTED with not less than 30% water, or mixture of alcohol and water, by mass	1	1.1A		1	266	LQ0	P110(b)	PP42	MP20		
0118	HEXOLITE (HEXOTOL), dry or wetted with less than 15% water, by mass	1	1.1D		1		LQ0	P112(a) (b) or (c)		MP20		
0121	IGNITERS	1	1.1G		1		LQ0	P142		MP23		
0124	JET PERFORATING GUNS, CHARGED, oil well, without detonator	1	1.1D		1		LQ0	P101		MP21		
0129	LEAD AZIDE, WETTED with not less than 20% water, or mixture of alcohol and water, by mass	1	1.1A		1	266	LQ0	P110(b)	PP42	MP20		
0130	LEAD STYPHNATE (LEAD TRINITRORESORCINATE), WETTED with not less than 20% water, or mixture of alcohol and water, by mass	1	1.1A		1	266	LQ0	P110(b)	PP42	MP20		
0131	LIGHTERS, FUSE	1	1.4S		1.4		LQ0	P142		MP23		
0132	DEFLAGRATING METAL SALTS OF AROMATIC NITRODERIVATIVES, N.O.S.	1	1.3C		1	274	LQ0	P114(a) (b)	PP26	MP2		
0133	MANNITOL HEXANITRATE (NITROMANNITE), WETTED with not less than 40% water, or mixture of alcohol and water, by mass	1	1.1D		1	266	LQ0	P112(a)		MP20		
0135	MERCURY FULMINATE, WETTED with not less than 20% water, or mixture of alcohol and water, by mass	1	1.1A		1	266	LQ0	P110(b)	PP42	MP20		
0136	MINES with bursting charge	1	1.1F		1		LQ0	P130		MP23		

ADR tank		Vehicle for tank carriage	Transport category	Special provisions for carriage				Hazard identifi-cation No.	UN No.	Name and description
Tank code	Special provisions			Packages	Bulk	Loading, unloading and handling	Operation			
4.3	4.3.5, 6.8.4	9.1.1.2	1.1.3.6	7.2.4	7.3.3	7.5.11	8.5	5.3.2.3		3.1.2
(12)	(13)	(14)	(15)	(16)	(17)	(18)	(19)	(20)	(1)	(2)
			4	V2		CV1 CV2 CV3	S1		0105	FUSE, SAFETY
			1	V2		CV1 CV2 CV3	S1		0106	FUZES, DETONATING
			1	V2		CV1 CV2 CV3	S1		0107	FUZES, DETONATING
			4	V2		CV1 CV2 CV3	S1		0110	GRENADES, PRACTICE, hand or rifle
			0	V2		CV1 CV2 CV3	S1		0113	GUANYLNITROSAMINO-GUANYLIDENE HYDRAZINE, WETTED with not less than 30% water, by mass
			0	V2		CV1 CV2 CV3	S1		0114	GUANYLNITROSAMINO-GUANYLTETRAZENE (TETRAZENE), WETTED with not less than 30% water, or mixture of alcohol and water, by mass
			1	V2 V3		CV1 CV2 CV3	S1		0118	HEXOLITE (HEXOTOL), dry or wetted with less than 15% water, by mass
			1	V2		CV1 CV2 CV3	S1		0121	IGNITERS
			1	V2		CV1 CV2 CV3	S1		0124	JET PERFORATING GUNS, CHARGED, oil well, without detonator
			0	V2		CV1 CV2 CV3	S1		0129	LEAD AZIDE, WETTED with not less than 20% water, or mixture of alcohol and water, by mass
			0	V2		CV1 CV2 CV3	S1		0130	LEAD STYPHNATE (LEAD TRINITRORESORCINATE), WETTED with not less than 20% water, or mixture of alcohol and water, by mass
			4	V2		CV1 CV2 CV3	S1		0131	LIGHTERS, FUSE
			1	V2 V3		CV1 CV2 CV3	S1		0132	DEFLAGRATING METAL SALTS OF AROMATIC NITRODERIVATIVES, N.O.S.
			1	V2		CV1 CV2 CV3	S1		0133	MANNITOL HEXANITRATE (NITROMANNITE), WETTED with not less than 40% water, or mixture of alcohol and water, by mass
			0	V2		CV1 CV2 CV3	S1		0135	MERCURY FULMINATE, WETTED with not less than 20% water, or mixture of alcohol and water, by mass
			1	V2		CV1 CV2 CV3	S1		0136	MINES with bursting charge

UN No.	Name and description	Class	Classification code	Packing group	Labels	Special provisions	Limited quantities	Packaging			Portable tanks and bulk containers	
								Packing instructions	Special packing provisions	Mixed packing provisions	Instructions	Special provisions
	3.1.2	2.2	2.2	2.1.1.3	5.2.2	3.3	3.4.6	4.1.4	4.1.4	4.1.10	4.2.5.2 7.3.2	4.2.5.3
(1)	(2)	(3a)	(3b)	(4)	(5)	(6)	(7)	(8)	(9a)	(9b)	(10)	(11)
0137	MINES with bursting charge	1	1.1D		1		LQ0	P130 LP101	PP67 L1	MP21		
0138	MINES with bursting charge	1	1.2D		1		LQ0	P130 LP101	PP67 L1	MP21		
0143	NITROGLYCERIN, DESENSITIZED with not less than 40% non-volatile water-insoluble phlegmatizer, by mass	1	1.1D		1 +6.1	266 271	LQ0	P115	PP53 PP54 PP57 PP58	MP20		
0144	NITROGLYCERIN SOLUTION IN ALCOHOL with more than 1% but not more than 10% nitroglycerin	1	1.1D		1	500	LQ0	P115	PP45 PP55 PP56 PP59 PP60	MP20		
0146	NITROSTARCH, dry or wetted with less than 20% water, by mass	1	1.1D		1		LQ0	P112(a) (b) or (c)		MP20		
0147	NITRO UREA	1	1.1D		1		LQ0	P112(b)		MP20		
0150	PENTAERYTHRITE TETRANITRATE (PENTAERYTHRITOL TETRANITRATE; PETN), WETTED with not less than 25% water, by mass, or DESENSITIZED with not less than 15% phlegmatizer, by mass	1	1.1D		1	266	LQ0	P112(a) (b)		MP20		
0151	PENTOLITE, dry or wetted with less than 15% water, by mass	1	1.1D		1		LQ0	P112(a) (b) or (c)		MP20		
0153	TRINITROANILINE (PICRAMIDE)	1	1.1D		1		LQ0	P112(b) (c)		MP20		
0154	TRINITROPHENOL (PICRIC ACID), dry or wetted with less than 30% water, by mass	1	1.1D		1		LQ0	P112(a) (b)(c)	PP26	MP20		
0155	TRINITROCHLORO-BENZENE (PICRYL CHLORIDE)	1	1.1D		1		LQ0	P112(b) (c)		MP20		
0159	POWDER CAKE (POWDER PASTE), WETTED with not less than 25% water, by mass	1	1.3C		1	266	LQ0	P111	PP43	MP20		
0160	POWDER, SMOKELESS	1	1.1C		1		LQ0	P114(b)	PP50 PP52	MP20 MP24		
0161	POWDER, SMOKELESS	1	1.3C		1		LQ0	P114(b)	PP50 PP52	MP20 MP24		
0167	PROJECTILES with bursting charge	1	1.1F		1		LQ0	P130		MP23		
0168	PROJECTILES with bursting charge	1	1.1D		1		LQ0	P130 LP101	PP67 L1	MP21		
0169	PROJECTILES with bursting charge	1	1.2D		1		LQ0	P130 LP101	PP67 L1	MP21		
0171	AMMUNITION, ILLUMINATING with or without burster, expelling charge or propelling charge	1	1.2G		1		LQ0	P130 LP101	PP67 L1	MP23		

ADR tank		Vehicle for tank carriage	Transport category	Special provisions for carriage				Hazard identification No.	UN No.	Name and description
Tank code	Special provisions			Packages	Bulk	Loading, unloading and handling	Operation			
4.3	4.3.5, 6.8.4	9.1.1.2	1.1.3.6	7.2.4	7.3.3	7.5.11	8.5	5.3.2.3		3.1.2
(12)	(13)	(14)	(15)	(16)	(17)	(18)	(19)	(20)	(1)	(2)
			1	V2		CV1 CV2 CV3	S1		0137	MINES with bursting charge
			1	V2		CV1 CV2 CV3	S1		0138	MINES with bursting charge
			1	V2		CV1 CV2 CV3 CV28	S1		0143	NITROGLYCERIN, DESENSITIZED with not less than 40% non-volatile water-insoluble phlegmatizer, by mass
			1	V2		CV1 CV2 CV3	S1		0144	NITROGLYCERIN SOLUTION IN ALCOHOL with more than 1% but not more than 10% nitroglycerin
			1	V2 V3		CV1 CV2 CV3	S1		0146	NITROSTARCH, dry or wetted with less than 20% water, by mass
			1	V2 V3		CV1 CV2 CV3	S1		0147	NITRO UREA
			1	V2 V3		CV1 CV2 CV3	S1		0150	PENTAERYTHRITE TETRANITRATE (PENTAERYTHRITOL TETRANITRATE; PETN), WETTED with not less than 25% water, by mass, or DESENSITIZED with not less than 15% phlegmatizer, by mass
			1	V2 V3		CV1 CV2 CV3	S1		0151	PENTOLITE, dry or wetted with less than 15% water, by mass
			1	V2 V3		CV1 CV2 CV3	S1		0153	TRINITROANILINE (PICRAMIDE)
			1	V2 V3		CV1 CV2 CV3	S1		0154	TRINITROPHENOL (PICRIC ACID), dry or wetted with less than 30% water, by mass
			1	V2 V3		CV1 CV2 CV3	S1		0155	TRINITROCHLORO-BENZENE (PICRYL CHLORIDE)
			1	V2		CV1 CV2 CV3	S1		0159	POWDER CAKE (POWDER PASTE), WETTED with not less than 25% water, by mass
			1	V2 V3		CV1 CV2 CV3	S1		0160	POWDER, SMOKELESS
			1	V2 V3		CV1 CV2 CV3	S1		0161	POWDER, SMOKELESS
			1	V2		CV1 CV2 CV3	S1		0167	PROJECTILES with bursting charge
			1	V2		CV1 CV2 CV3	S1		0168	PROJECTILES with bursting charge
			1	V2		CV1 CV2 CV3	S1		0169	PROJECTILES with bursting charge
			1	V2		CV1 CV2 CV3	S1		0171	AMMUNITION, ILLUMINATING with or without burster, expelling charge or propelling charge

UN No.	Name and description	Class	Classification code	Packing group	Labels	Special provisions	Limited quantities	Packaging			Portable tanks and bulk containers	
								Packing instructions	Special packing provisions	Mixed packing provisions	Instructions	Special provisions
	3.1.2	2.2	2.2	2.1.1.3	5.2.2	3.3	3.4.6	4.1.4	4.1.4	4.1.10	4.2.5.2 7.3.2	4.2.5.3
(1)	(2)	(3a)	(3b)	(4)	(5)	(6)	(7)	(8)	(9a)	(9b)	(10)	(11)
0173	RELEASE DEVICES, EXPLOSIVE	1	1.4S		1.4		LQ0	P134 LP102		MP23		
0174	RIVETS, EXPLOSIVE	1	1.4S		1.4		LQ0	P134 LP102		MP23		
0180	ROCKETS with bursting charge	1	1.1F		1		LQ0	P130		MP23		
0181	ROCKETS with bursting charge	1	1.1E		1		LQ0	P130 LP101	PP67 L1	MP21		
0182	ROCKETS with bursting charge	1	1.2E		1		LQ0	P130 LP101	PP67 L1	MP21		
0183	ROCKETS with inert head	1	1.3C		1		LQ0	P130 LP101	PP67 L1	MP22		
0186	ROCKET MOTORS	1	1.3C		1		LQ0	P130 LP101	PP67 L1	MP22 MP24		
0190	SAMPLES, EXPLOSIVE, other than initiating explosive	1				16 274	LQ0	P101		MP2		
0191	SIGNAL DEVICES, HAND	1	1.4G		1.4		LQ0	P135		MP23 MP24		
0192	SIGNALS, RAILWAY TRACK, EXPLOSIVE	1	1.1G		1		LQ0	P135		MP23		
0193	SIGNALS, RAILWAY TRACK, EXPLOSIVE	1	1.4S		1.4		LQ0	P135		MP23		
0194	SIGNALS, DISTRESS, ship	1	1.1G		1		LQ0	P135		MP23 MP24		
0195	SIGNALS, DISTRESS, ship	1	1.3G		1		LQ0	P135		MP23 MP24		
0196	SIGNALS, SMOKE	1	1.1G		1		LQ0	P135		MP23		
0197	SIGNALS, SMOKE	1	1.4G		1.4		LQ0	P135		MP23 MP24		
0204	SOUNDING DEVICES, EXPLOSIVE	1	1.2F		1		LQ0	P134 LP102		MP23		
0207	TETRANITROANILINE	1	1.1D		1		LQ0	P112(b) (c)		MP20		
0208	TRINITROPHENYLMETHYL NITRAMINE (TETRYL)	1	1.1D		1		LQ0	P112(b) (c)		MP20		
0209	TRINITROTOLUENE (TNT), dry or wetted with less than 30% water, by mass	1	1.1D		1		LQ0	P112(b) (c)	PP46	MP20		
0212	TRACERS FOR AMMUNITION	1	1.3G		1		LQ0	P133	PP69	MP23		
0213	TRINITROANISOLE	1	1.1D		1		LQ0	P112(b) (c)		MP20		
0214	TRINITROBENZENE, dry or wetted with less than 30% water, by mass	1	1.1D		1		LQ0	P112(a) (b) or (c)		MP20		

ADR tank		Vehicle for tank carriage	Transport category	Special provisions for carriage				Hazard identifi-cation No.	UN No.	Name and description
Tank code	Special provisions			Packages	Bulk	Loading, unloading and handling	Operation			
4.3	4.3.5, 6.8.4	9.1.1.2	1.1.3.6	7.2.4	7.3.3	7.5.11	8.5	5.3.2.3		3.1.2
(12)	(13)	(14)	(15)	(16)	(17)	(18)	(19)	(20)	(1)	(2)
			4	V2		CV1 CV2 CV3	S1		0173	RELEASE DEVICES, EXPLOSIVE
			4	V2		CV1 CV2 CV3	S1		0174	RIVETS, EXPLOSIVE
			1	V2		CV1 CV2 CV3	S1		0180	ROCKETS with bursting charge
			1	V2		CV1 CV2 CV3	S1		0181	ROCKETS with bursting charge
			1	V2		CV1 CV2 CV3	S1		0182	ROCKETS with bursting charge
			1	V2		CV1 CV2 CV3	S1		0183	ROCKETS with inert head
			1	V2		CV1 CV2 CV3	S1		0186	ROCKET MOTORS
			0	V2		CV1 CV2 CV3	S1		0190	SAMPLES, EXPLOSIVE, other than initiating explosive
			2	V2		CV1 CV2 CV3	S1		0191	SIGNAL DEVICES, HAND
			1	V2		CV1 CV2 CV3	S1		0192	SIGNALS, RAILWAY TRACK, EXPLOSIVE
			4	V2		CV1 CV2 CV3	S1		0193	SIGNALS, RAILWAY TRACK, EXPLOSIVE
			1	V2		CV1 CV2 CV3	S1		0194	SIGNALS, DISTRESS, ship
			1	V2		CV1 CV2 CV3	S1		0195	SIGNALS, DISTRESS, ship
			1	V2		CV1 CV2 CV3	S1		0196	SIGNALS, SMOKE
			2	V2		CV1 CV2 CV3	S1		0197	SIGNALS, SMOKE
			1	V2		CV1 CV2 CV3	S1		0204	SOUNDING DEVICES, EXPLOSIVE
			1	V2 V3		CV1 CV2 CV3	S1		0207	TETRANITROANILINE
			1	V2 V3		CV1 CV2 CV3	S1		0208	TRINITROPHENYLMETHYL NITRAMINE (TETRYL)
			1	V2 V3		CV1 CV2 CV3	S1		0209	TRINITROTOLUENE (TNT), dry or wetted with less than 30% water, by mass
			1	V2		CV1 CV2 CV3	S1		0212	TRACERS FOR AMMUNITION
			1	V2 V3		CV1 CV2 CV3	S1		0213	TRINITROANISOLE
			1	V2 V3		CV1 CV2 CV3	S1		0214	TRINITROBENZENE, dry or wetted with less than 30% water, by mass

UN No.	Name and description	Class	Classification code	Packing group	Labels	Special provisions	Limited quantities	Packaging			Portable tanks and bulk containers	
								Packing instructions	Special packing provisions	Mixed packing provisions	Instructions	Special provisions
	3.1.2	2.2	2.2	2.1.1.3	5.2.2	3.3	3.4.6	4.1.4	4.1.4	4.1.10	4.2.5.2 7.3.2	4.2.5.3
(1)	(2)	(3a)	(3b)	(4)	(5)	(6)	(7)	(8)	(9a)	(9b)	(10)	(11)
0215	TRINITROBENZOIC ACID, dry or wetted with less than 30% water, by mass	1	1.1D		1		LQ0	P112(a) (b) or (c)		MP20		
0216	TRINITRO-m-CRESOL	1	1.1D		1		LQ0	P112(b) (c)	PP26	MP20		
0217	TRINITRONAPHTHALENE	1	1.1D		1		LQ0	P112(b) (c)		MP20		
0218	TRINITROPHENETOLE	1	1.1D		1		LQ0	P112(b) (c)		MP20		
0219	TRINITRORESORCINOL (STYPHNIC ACID), dry or wetted with less than 20% water, or mixture of alcohol and water, by mass	1	1.1D		1		LQ0	P112(a) (b)(c)	PP26	MP20		
0220	UREA NITRATE, dry or wetted with less than 20% water, by mass	1	1.1D		1		LQ0	P112(a) (b) or (c)		MP20		
0221	WARHEADS, TORPEDO with bursting charge	1	1.1D		1		LQ0	P130 LP101	PP67 L1	MP21		
0222	AMMONIUM NITRATE with more than 0.2% combustible substances, including any organic substance calculated as carbon, to the exclusion of any other added substance	1	1.1D		1		LQ0	P112(b) (c)	PP47	MP20		
0224	BARIUM AZIDE, dry or wetted with less than 50% water, by mass	1	1.1A		1 +6.1		LQ0	P110(b)	PP42	MP20		
0225	BOOSTERS WITH DETONATOR	1	1.1B		1		LQ0	P133	PP69	MP23		
0226	CYCLOTETRAMETHYLENE-TETRANITRAMINE (HMX; OCTOGEN), WETTED with not less than 15% water, by mass	1	1.1D		1	266	LQ0	P112(a)	PP45	MP20		
0234	SODIUM DINITRO-o-CRESOLATE, dry or wetted with less than 15% water, by mass	1	1.3C		1		LQ0	P114(a) (b)	PP26	MP20		
0235	SODIUM PICRAMATE, dry or wetted with less than 20% water, by mass	1	1.3C		1		LQ0	P114(a) (b)	PP26	MP20		
0236	ZIRCONIUM PICRAMATE, dry or wetted with less than 20% water, by mass	1	1.3C		1		LQ0	P114(a) (b)	PP26	MP20		
0237	CHARGES, SHAPED, FLEXIBLE, LINEAR	1	1.4D		1.4		LQ0	P138		MP21		
0238	ROCKETS, LINE-THROWING	1	1.2G		1		LQ0	P130		MP23 MP24		
0240	ROCKETS, LINE-THROWING	1	1.3G		1		LQ0	P130		MP23 MP24		
0241	EXPLOSIVE, BLASTING, TYPE E	1	1.1D		1	617	LQ0	P116 IBC100	PP61 PP62 PP65 B10	MP20		

ADR tank		Vehicle for tank carriage	Transport category	Special provisions for carriage				Hazard identification No.	UN No.	Name and description
Tank code	Special provisions			Packages	Bulk	Loading, unloading and handling	Operation			
4.3	4.3.5, 6.8.4	9.1.1.2	1.1.3.6	7.2.4	7.3.3	7.5.11	8.5	5.3.2.3		3.1.2
(12)	(13)	(14)	(15)	(16)	(17)	(18)	(19)	(20)	(1)	(2)
			1	V2 V3		CV1 CV2 CV3	S1		0215	TRINITROBENZOIC ACID, dry or wetted with less than 30% water, by mass
			1	V2 V3		CV1 CV2 CV3	S1		0216	TRINITRO-m-CRESOL
			1	V2 V3		CV1 CV2 CV3	S1		0217	TRINITRONAPHTHALENE
			1	V2 V3		CV1 CV2 CV3	S1		0218	TRINITROPHENETOLE
			1	V2 V3		CV1 CV2 CV3	S1		0219	TRINITRORESORCINOL (STYPHNIC ACID), dry or wetted with less than 20% water, or mixture of alcohol and water, by mass
			1	V2 V3		CV1 CV2 CV3	S1		0220	UREA NITRATE, dry or wetted with less than 20% water, by mass
			1	V2		CV1 CV2 CV3	S1		0221	WARHEADS, TORPEDO with bursting charge
			1	V2 V3		CV1 CV2 CV3	S1		0222	AMMONIUM NITRATE with more than 0.2% combustible substances, including any organic substance calculated as carbon, to the exclusion of any other added substance
			0	V2 V3		CV1 CV2 CV3 CV28	S1		0224	BARIUM AZIDE, dry or wetted with less than 50% water, by mass
			1	V2		CV1 CV2 CV3	S1		0225	BOOSTERS WITH DETONATOR
			1	V2		CV1 CV2 CV3	S1		0226	CYCLOTETRAMETHYLENE-TETRANITRAMINE (HMX; OCTOGEN), WETTED with not less than 15% water, by mass
			1	V2 V3		CV1 CV2 CV3	S1		0234	SODIUM DINITRO-o-CRESOLATE, dry or wetted with less than 15% water, by mass
			1	V2 V3		CV1 CV2 CV3	S1		0235	SODIUM PICRAMATE, dry or wetted with less than 20% water, by mass
			1	V2 V3		CV1 CV2 CV3	S1		0236	ZIRCONIUM PICRAMATE, dry or wetted with less than 20% water, by mass
			2	V2		CV1 CV2 CV3	S1		0237	CHARGES, SHAPED, FLEXIBLE, LINEAR
			1	V2		CV1 CV2 CV3	S1		0238	ROCKETS, LINE-THROWING
			1	V2		CV1 CV2 CV3	S1		0240	ROCKETS, LINE-THROWING
			1	V2		CV1 CV2 CV3	S1		0241	EXPLOSIVE, BLASTING, TYPE E

UN No.	Name and description	Class	Classification code	Packing group	Labels	Special provisions	Limited quantities	Packaging			Portable tanks and bulk containers	
								Packing instructions	Special packing provisions	Mixed packing provisions	Instructions	Special provisions
	3.1.2	2.2	2.2	2.1.1.3	5.2.2	3.3	3.4.6	4.1.4	4.1.4	4.1.10	4.2.5.2 7.3.2	4.2.5.3
(1)	(2)	(3a)	(3b)	(4)	(5)	(6)	(7)	(8)	(9a)	(9b)	(10)	(11)
0242	CHARGES, PROPELLING, FOR CANNON	1	1.3C		1		LQ0	P130		MP22		
0243	AMMUNITION, INCENDIARY, WHITE PHOSPHORUS with burster, expelling charge or propelling charge	1	1.2H		1		LQ0	P130 LP101	PP67 L1	MP23		
0244	AMMUNITION, INCENDIARY, WHITE PHOSPHORUS with burster, expelling charge or propelling charge	1	1.3H		1		LQ0	P130 LP101	PP67 L1	MP23		
0245	AMMUNITION, SMOKE, WHITE PHOSPHORUS with burster, expelling charge or propelling charge	1	1.2H		1		LQ0	P130 LP101	PP67 L1	MP23		
0246	AMMUNITION, SMOKE, WHITE PHOSPHORUS with burster, expelling charge or propelling charge	1	1.3H		1		LQ0	P130 LP101	PP67 L1	MP23		
0247	AMMUNITION, INCENDIARY, liquid or gel, with burster, expelling charge or propelling charge	1	1.3J		1		LQ0	P101		MP23		
0248	CONTRIVANCES, WATER-ACTIVATED with burster, expelling charge or propelling charge	1	1.2L		1	274	LQ0	P144	PP77	MP1		
0249	CONTRIVANCES, WATER-ACTIVATED with burster, expelling charge or propelling charge	1	1.3L		1	274	LQ0	P144	PP77	MP1		
0250	ROCKET MOTORS WITH HYPERGOLIC LIQUIDS with or without expelling charge	1	1.3L		1		LQ0	P101		MP1		
0254	AMMUNITION, ILLUMINATING with or without burster, expelling charge or propelling charge	1	1.3G		1		LQ0	P130 LP101	PP67 L1	MP23		
0255	DETONATORS, ELECTRIC for blasting	1	1.4B		1.4		LQ0	P131		MP23		
0257	FUZES, DETONATING	1	1.4B		1.4		LQ0	P141		MP23		
0266	OCTOLITE (OCTOL), dry or wetted with less than 15% water, by mass	1	1.1D		1		LQ0	P112(a) (b) or (c)		MP20		
0267	DETONATORS, NON-ELECTRIC for blasting	1	1.4B		1.4		LQ0	P131	PP68	MP23		
0268	BOOSTERS WITH DETONATOR	1	1.2B		1		LQ0	P133	PP69	MP23		
0271	CHARGES, PROPELLING	1	1.1C		1		LQ0	P143	PP76	MP22		
0272	CHARGES, PROPELLING	1	1.3C		1		LQ0	P143	PP76	MP22		
0275	CARTRIDGES, POWER DEVICE	1	1.3C		1		LQ0	P134 LP102		MP22		

ADR tank		Vehicle for tank carriage	Transport category	Special provisions for carriage				Hazard identification No.	UN No.	Name and description
Tank code	Special provisions			Packages	Bulk	Loading, unloading and handling	Operation			
4.3	4.3.5, 6.8.4	9.1.1.2	1.1.3.6	7.2.4	7.3.3	7.5.11	8.5	5.3.2.3		3.1.2
(12)	(13)	(14)	(15)	(16)	(17)	(18)	(19)	(20)	(1)	(2)
			1	V2		CV1 CV2 CV3	S1		0242	CHARGES, PROPELLING, FOR CANNON
			1	V2		CV1 CV2 CV3	S1		0243	AMMUNITION, INCENDIARY, WHITE PHOSPHORUS with burster, expelling charge or propelling charge
			1	V2		CV1 CV2 CV3	S1		0244	AMMUNITION, INCENDIARY, WHITE PHOSPHORUS with burster, expelling charge or propelling charge
			1	V2		CV1 CV2 CV3	S1		0245	AMMUNITION, SMOKE, WHITE PHOSPHORUS with burster, expelling charge or propelling charge
			1	V2		CV1 CV2 CV3	S1		0246	AMMUNITION, SMOKE, WHITE PHOSPHORUS with burster, expelling charge or propelling charge
			1	V2		CV1 CV2 CV3	S1		0247	AMMUNITION, INCENDIARY, liquid or gel, with burster, expelling charge or propelling charge
			0	V2		CV1 CV2 CV3 CV4	S1		0248	CONTRIVANCES, WATER-ACTIVATED with burster, expelling charge or propelling charge
			0	V2		CV1 CV2 CV3 CV4	S1		0249	CONTRIVANCES, WATER-ACTIVATED with burster, expelling charge or propelling charge
			0	V2		CV1 CV2 CV3 CV4	S1		0250	ROCKET MOTORS WITH HYPERGOLIC LIQUIDS with or without expelling charge
			1	V2		CV1 CV2 CV3	S1		0254	AMMUNITION, ILLUMINATING with or without burster, expelling charge or propelling charge
			2	V2		CV1 CV2 CV3	S1		0255	DETONATORS, ELECTRIC for blasting
			2	V2		CV1 CV2 CV3	S1		0257	FUZES, DETONATING
			1	V2 V3		CV1 CV2 CV3	S1		0266	OCTOLITE (OCTOL), dry or wetted with less than 15% water, by mass
			2	V2		CV1 CV2 CV3	S1		0267	DETONATORS, NON-ELECTRIC for blasting
			1	V2		CV1 CV2 CV3	S1		0268	BOOSTERS WITH DETONATOR
			1	V2		CV1 CV2 CV3	S1		0271	CHARGES, PROPELLING
			1	V2		CV1 CV2 CV3	S1		0272	CHARGES, PROPELLING
			1	V2		CV1 CV2 CV3	S1		0275	CARTRIDGES, POWER DEVICE

UN No.	Name and description	Class	Classification code	Packing group	Labels	Special provisions	Limited quantities	Packaging			Portable tanks and bulk containers	
								Packing instructions	Special packing provisions	Mixed packing provisions	Instructions	Special provisions
	3.1.2	2.2	2.2	2.1.1.3	5.2.2	3.3	3.4.6	4.1.4	4.1.4	4.1.10	4.2.5.2 7.3.2	4.2.5.3
(1)	(2)	(3a)	(3b)	(4)	(5)	(6)	(7)	(8)	(9a)	(9b)	(10)	(11)
0276	CARTRIDGES, POWER DEVICE	1	1.4C		1.4		LQ0	P134 LP102		MP22		
0277	CARTRIDGES, OIL WELL	1	1.3C		1		LQ0	P134 LP102		MP22		
0278	CARTRIDGES, OIL WELL	1	1.4C		1.4		LQ0	P134 LP102		MP22		
0279	CHARGES, PROPELLING, FOR CANNON	1	1.1C		1		LQ0	P130		MP22		
0280	ROCKET MOTORS	1	1.1C		1		LQ0	P130 LP101	PP67 L1	MP22		
0281	ROCKET MOTORS	1	1.2C		1		LQ0	P130 LP101	PP67 L1	MP22		
0282	NITROGUANIDINE (PICRITE), dry or wetted with less than 20% water, by mass	1	1.1D		1		LQ0	P112(a) (b) or (c)		MP20		
0283	BOOSTERS without detonator	1	1.2D		1		LQ0	P132(a) or (b)		MP21		
0284	GRENADES, hand or rifle, with bursting charge	1	1.1D		1		LQ0	P141		MP21		
0285	GRENADES, hand or rifle, with bursting charge	1	1.2D		1		LQ0	P141		MP21		
0286	WARHEADS, ROCKET with bursting charge	1	1.1D		1		LQ0	P130 LP101	PP67 L1	MP21		
0287	WARHEADS, ROCKET with bursting charge	1	1.2D		1		LQ0	P130 LP101	PP67 L1	MP21		
0288	CHARGES, SHAPED, FLEXIBLE, LINEAR	1	1.1D		1		LQ0	P138		MP21		
0289	CORD, DETONATING, flexible	1	1.4D		1.4		LQ0	P139	PP71 PP72	MP21		
0290	CORD (FUSE), DETONATING, metal clad	1	1.1D		1		LQ0	P139	PP71	MP21		
0291	BOMBS with bursting charge	1	1.2F		1		LQ0	P130		MP23		
0292	GRENADES, hand or rifle, with bursting charge	1	1.1F		1		LQ0	P141		MP23		
0293	GRENADES, hand or rifle, with bursting charge	1	1.2F		1		LQ0	P141		MP23		
0294	MINES with bursting charge	1	1.2F		1		LQ0	P130		MP23		
0295	ROCKETS with bursting charge	1	1.2F		1		LQ0	P130		MP23		
0296	SOUNDING DEVICES, EXPLOSIVE	1	1.1F		1		LQ0	P134 LP102		MP23		

ADR tank		Vehicle for tank carriage	Transport category	Special provisions for carriage				Hazard identifi-cation No.	UN No.	Name and description
Tank code	Special provisions			Packages	Bulk	Loading, unloading and handling	Operation			
4.3	4.3.5, 6.8.4	9.1.1.2	1.1.3.6	7.2.4	7.3.3	7.5.11	8.5	5.3.2.3		3.1.2
(12)	(13)	(14)	(15)	(16)	(17)	(18)	(19)	(20)	(1)	(2)
			2	V2		CV1 CV2 CV3	S1		0276	CARTRIDGES, POWER DEVICE
			1	V2		CV1 CV2 CV3	S1		0277	CARTRIDGES, OIL WELL
			2	V2		CV1 CV2 CV3	S1		0278	CARTRIDGES, OIL WELL
			1	V2		CV1 CV2 CV3	S1		0279	CHARGES, PROPELLING, FOR CANNON
			1	V2		CV1 CV2 CV3	S1		0280	ROCKET MOTORS
			1	V2		CV1 CV2 CV3	S1		0281	ROCKET MOTORS
			1	V2 V3		CV1 CV2 CV3	S1		0282	NITROGUANIDINE (PICRITE), dry or wetted with less than 20% water, by mass
			1	V2		CV1 CV2 CV3	S1		0283	BOOSTERS without detonator
			1	V2		CV1 CV2 CV3	S1		0284	GRENADES, hand or rifle, with bursting charge
			1	V2		CV1 CV2 CV3	S1		0285	GRENADES, hand or rifle, with bursting charge
			1	V2		CV1 CV2 CV3	S1		0286	WARHEADS, ROCKET with bursting charge
			1	V2		CV1 CV2 CV3	S1		0287	WARHEADS, ROCKET with bursting charge
			1	V2		CV1 CV2 CV3	S1		0288	CHARGES, SHAPED, FLEXIBLE, LINEAR
			2	V2		CV1 CV2 CV3	S1		0289	CORD, DETONATING, flexible
			1	V2		CV1 CV2 CV3	S1		0290	CORD (FUSE), DETONATING, metal clad
			1	V2		CV1 CV2 CV3	S1		0291	BOMBS with bursting charge
			1	V2		CV1 CV2 CV3	S1		0292	GRENADES, hand or rifle, with bursting charge
			1	V2		CV1 CV2 CV3	S1		0293	GRENADES, hand or rifle, with bursting charge
			1	V2		CV1 CV2 CV3	S1		0294	MINES with bursting charge
			1	V2		CV1 CV2 CV3	S1		0295	ROCKETS with bursting charge
			1	V2		CV1 CV2 CV3	S1		0296	SOUNDING DEVICES, EXPLOSIVE

UN No.	Name and description	Class	Classification code	Packing group	Labels	Special provisions	Limited quantities	Packaging			Portable tanks and bulk containers	
								Packing instructions	Special packing provisions	Mixed packing provisions	Instructions	Special provisions
	3.1.2	2.2	2.2	2.1.1.3	5.2.2	3.3	3.4.6	4.1.4	4.1.4	4.1.10	4.2.5.2 7.3.2	4.2.5.3
(1)	(2)	(3a)	(3b)	(4)	(5)	(6)	(7)	(8)	(9a)	(9b)	(10)	(11)
0297	AMMUNITION, ILLUMINATING with or without burster, expelling charge or propelling charge	1	1.4G		1.4		LQ0	P130 LP101	PP67 L1	MP23		
0299	BOMBS, PHOTO-FLASH	1	1.3G		1		LQ0	P130 LP101	PP67 L1	MP23		
0300	AMMUNITION, INCENDIARY with or without burster, expelling charge or propelling charge	1	1.4G		1.4		LQ0	P130 LP101	PP67 L1	MP23		
0301	AMMUNITION, TEAR-PRODUCING with burster, expelling charge or propelling charge	1	1.4G		1.4 +6.1 +8		LQ0	P130 LP101	PP67 L1	MP23		
0303	AMMUNITION, SMOKE with or without burster, expelling charge or propelling charge	1	1.4G		1.4	204	LQ0	P130 LP101	PP67 L1	MP23		
0305	FLASH POWDER	1	1.3G		1		LQ0	P113	PP49	MP20		
0306	TRACERS FOR AMMUNITION	1	1.4G		1.4		LQ0	P133	PP69	MP23		
0312	CARTRIDGES, SIGNAL	1	1.4G		1.4		LQ0	P135		MP23 MP24		
0313	SIGNALS, SMOKE	1	1.2G		1		LQ0	P135		MP23		
0314	IGNITERS	1	1.2G		1		LQ0	P142		MP23		
0315	IGNITERS	1	1.3G		1		LQ0	P142		MP23		
0316	FUZES, IGNITING	1	1.3G		1		LQ0	P141		MP23		
0317	FUZES, IGNITING	1	1.4G		1.4		LQ0	P141		MP23		
0318	GRENADES, PRACTICE, hand or rifle	1	1.3G		1		LQ0	P141		MP23		
0319	PRIMERS, TUBULAR	1	1.3G		1		LQ0	P133		MP23		
0320	PRIMERS, TUBULAR	1	1.4G		1.4		LQ0	P133		MP23		
0321	CARTRIDGES FOR WEAPONS with bursting charge	1	1.2E		1		LQ0	P130 LP101	PP67 L1	MP21		
0322	ROCKET MOTORS WITH HYPERGOLIC LIQUIDS with or without expelling charge	1	1.2L		1		LQ0	P101		MP1		
0323	CARTRIDGES, POWER DEVICE	1	1.4S		1.4		LQ0	P134 LP102		MP23		
0324	PROJECTILES with bursting charge	1	1.2F		1		LQ0	P130		MP23		

ADR tank		Vehicle for tank carriage	Transport category	Special provisions for carriage				Hazard identifi-cation No.	UN No.	Name and description
Tank code	Special provisions			Packages	Bulk	Loading, unloading and handling	Operation			
4.3	4.3.5, 6.8.4	9.1.1.2	1.1.3.6	7.2.4	7.3.3	7.5.11	8.5	5.3.2.3		3.1.2
(12)	(13)	(14)	(15)	(16)	(17)	(18)	(19)	(20)	(1)	(2)
			2	V2		CV1 CV2 CV3	S1		0297	AMMUNITION, ILLUMINATING with or without burster, expelling charge or propelling charge
			1	V2		CV1 CV2 CV3	S1		0299	BOMBS, PHOTO-FLASH
			2	V2		CV1 CV2 CV3	S1		0300	AMMUNITION, INCENDIARY with or without burster, expelling charge or propelling charge
			2	V2		CV1 CV2 CV3 CV28	S1		0301	AMMUNITION, TEAR-PRODUCING with burster, expelling charge or propelling charge
			2	V2		CV1 CV2 CV3	S1		0303	AMMUNITION, SMOKE with or without burster, expelling charge or propelling charge
			1	V2 V3		CV1 CV2 CV3	S1		0305	FLASH POWDER
			2	V2		CV1 CV2 CV3	S1		0306	TRACERS FOR AMMUNITION
			2	V2		CV1 CV2 CV3	S1		0312	CARTRIDGES, SIGNAL
			1	V2		CV1 CV2 CV3	S1		0313	SIGNALS, SMOKE
			1	V2		CV1 CV2 CV3	S1		0314	IGNITERS
			1	V2		CV1 CV2 CV3	S1		0315	IGNITERS
			1	V2		CV1 CV2 CV3	S1		0316	FUZES, IGNITING
			2	V2		CV1 CV2 CV3	S1		0317	FUZES, IGNITING
			1	V2		CV1 CV2 CV3	S1		0318	GRENADES, PRACTICE, hand or rifle
			1	V2		CV1 CV2 CV3	S1		0319	PRIMERS, TUBULAR
			2	V2		CV1 CV2 CV3	S1		0320	PRIMERS, TUBULAR
			1	V2		CV1 CV2 CV3	S1		0321	CARTRIDGES FOR WEAPONS with bursting charge
			0	V2		CV1 CV2 CV3 CV4	S1		0322	ROCKET MOTORS WITH HYPERGOLIC LIQUIDS with or without expelling charge
			4	V2		CV1 CV2 CV3	S1		0323	CARTRIDGES, POWER DEVICE
			1	V2		CV1 CV2 CV3	S1		0324	PROJECTILES with bursting charge

UN No.	Name and description	Class	Classification code	Packing group	Labels	Special provisions	Limited quantities	Packaging			Portable tanks and bulk containers	
								Packing instructions	Special packing provisions	Mixed packing provisions	Instructions	Special provisions
	3.1.2	2.2	2.2	2.1.1.3	5.2.2	3.3	3.4.6	4.1.4	4.1.4	4.1.10	4.2.5.2 7.3.2	4.2.5.3
(1)	(2)	(3a)	(3b)	(4)	(5)	(6)	(7)	(8)	(9a)	(9b)	(10)	(11)
0325	IGNITERS	1	1.4G		1.4		LQ0	P142		MP23		
0326	CARTRIDGES FOR WEAPONS, BLANK	1	1.1C		1		LQ0	P130		MP22		
0327	CARTRIDGES FOR WEAPONS, BLANK or CARTRIDGES, SMALL ARMS, BLANK	1	1.3C		1		LQ0	P130		MP22		
0328	CARTRIDGES FOR WEAPONS, INERT PROJECTILE	1	1.2C		1		LQ0	P130 LP101	PP67 L1	MP22		
0329	TORPEDOES with bursting charge	1	1.1E		1		LQ0	P130 LP101	PP67 L1	MP21		
0330	TORPEDOES with bursting charge	1	1.1F		1		LQ0	P130		MP23		
0331	EXPLOSIVE, BLASTING, TYPE B (AGENT, BLASTING, TYPE B)	1	1.5D		1.5	617	LQ0	P116 IBC100	PP61 PP62 PP64 PP65	MP20	T1	TP1 TP17 TP32
0332	EXPLOSIVE, BLASTING, TYPE E (AGENT, BLASTING, TYPE E)	1	1.5D		1.5	617	LQ0	P116 IBC100	PP61 PP62 PP65	MP20	T1	TP1 TP17 TP32
0333	FIREWORKS	1	1.1G		1	645	LQ0	P135		MP23 MP24		
0334	FIREWORKS	1	1.2G		1	645	LQ0	P135		MP23 MP24		
0335	FIREWORKS	1	1.3G		1	645	LQ0	P135		MP23 MP24		
0336	FIREWORKS	1	1.4G		1.4	645 651	LQ0	P135		MP23 MP24		
0337	FIREWORKS	1	1.4S		1.4	645	LQ0	P135		MP23 MP24		
0338	CARTRIDGES FOR WEAPONS, BLANK or CARTRIDGES, SMALL ARMS, BLANK	1	1.4C		1.4		LQ0	P130		MP22		
0339	CARTRIDGES FOR WEAPONS, INERT PROJECTILE or CARTRIDGES, SMALL ARMS	1	1.4C		1.4		LQ0	P130		MP22		
0340	NITROCELLULOSE, dry or wetted with less than 25% water (or alcohol), by mass	1	1.1D		1		LQ0	P112(a) (b)		MP20		
0341	NITROCELLULOSE, unmodified or plasticized with less than 18% plasticizing substance, by mass	1	1.1D		1		LQ0	P112(b)		MP20		
0342	NITROCELLULOSE, WETTED with not less than 25% alcohol, by mass	1	1.3C		1	105	LQ0	P114(a)	PP43	MP20		
0343	NITROCELLULOSE, PLASTICIZED with not less than 18% plasticizing substance, by mass	1	1.3C		1	105	LQ0	P111		MP20		

ADR tank		Vehicle for tank carriage	Transport category	Special provisions for carriage				Hazard identifi-cation No.	UN No.	Name and description
Tank code	Special provisions			Packages	Bulk	Loading, unloading and handling	Operation			
4.3	4.3.5, 6.8.4	9.1.1.2	1.1.3.6	7.2.4	7.3.3	7.5.11	8.5	5.3.2.3		3.1.2
(12)	(13)	(14)	(15)	(16)	(17)	(18)	(19)	(20)	(1)	(2)
			2	V2		CV1 CV2 CV3	S1		0325	IGNITERS
			1	V2		CV1 CV2 CV3	S1		0326	CARTRIDGES FOR WEAPONS, BLANK
			1	V2		CV1 CV2 CV3	S1		0327	CARTRIDGES FOR WEAPONS, BLANK or CARTRIDGES, SMALL ARMS, BLANK
			1	V2		CV1 CV2 CV3	S1		0328	CARTRIDGES FOR WEAPONS, INERT PROJECTILE
			1	V2		CV1 CV2 CV3	S1		0329	TORPEDOES with bursting charge
			1	V2		CV1 CV2 CV3	S1		0330	TORPEDOES with bursting charge
			1	V2		CV1 CV2 CV3	S1	1.5D	0331	EXPLOSIVE, BLASTING, TYPE B (AGENT, BLASTING, TYPE B)
			1	V2		CV1 CV2 CV3	S1	1.5D	0332	EXPLOSIVE, BLASTING, TYPE E (AGENT, BLASTING, TYPE E)
			1	V2 V3		CV1 CV2 CV3	S1		0333	FIREWORKS
			1	V2 V3		CV1 CV2 CV3	S1		0334	FIREWORKS
			1	V2 V3		CV1 CV2 CV3	S1		0335	FIREWORKS
			2	V2		CV1 CV2 CV3	S1		0336	FIREWORKS
			4	V2		CV1 CV2 CV3	S1		0337	FIREWORKS
			2	V2		CV1 CV2 CV3	S1		0338	CARTRIDGES FOR WEAPONS, BLANK or CARTRIDGES, SMALL ARMS, BLANK
			2	V2		CV1 CV2 CV3	S1		0339	CARTRIDGES FOR WEAPONS, INERT PROJECTILE or CARTRIDGES, SMALL ARMS
			1	V2 V3		CV1 CV2 CV3	S1		0340	NITROCELLULOSE, dry or wetted with less than 25% water (or alcohol), by mass
			1	V2 V3		CV1 CV2 CV3	S1		0341	NITROCELLULOSE, unmodified or plasticized with less than 18% plasticizing substance, by mass
			1	V2		CV1 CV2 CV3	S1		0342	NITROCELLULOSE, WETTED with not less than 25% alcohol, by mass
			1	V2		CV1 CV2 CV3	S1		0343	NITROCELLULOSE, PLASTICIZED with not less than 18% plasticizing substance, by mass

UN No.	Name and description	Class	Classification code	Packing group	Labels	Special provisions	Limited quantities	Packaging			Portable tanks and bulk containers	
								Packing instructions	Special packing provisions	Mixed packing provisions	Instructions	Special provisions
	3.1.2	2.2	2.2	2.1.1.3	5.2.2	3.3	3.4.6	4.1.4	4.1.4	4.1.10	4.2.5.2 7.3.2	4.2.5.3
(1)	(2)	(3a)	(3b)	(4)	(5)	(6)	(7)	(8)	(9a)	(9b)	(10)	(11)
0344	PROJECTILES with bursting charge	1	1.4D		1.4		LQ0	P130 LP101	PP67 L1	MP21		
0345	PROJECTILES, inert with tracer	1	1.4S		1.4		LQ0	P130 LP101	PP67 L1	MP23		
0346	PROJECTILES with burster or expelling charge	1	1.2D		1		LQ0	P130 LP101	PP67 L1	MP21		
0347	PROJECTILES with burster or expelling charge	1	1.4D		1.4		LQ0	P130 LP101	PP67 L1	MP21		
0348	CARTRIDGES FOR WEAPONS with bursting charge	1	1.4F		1.4		LQ0	P130		MP23		
0349	ARTICLES, EXPLOSIVE, N.O.S.	1	1.4S		1.4	178 274	LQ0	P101		MP2		
0350	ARTICLES, EXPLOSIVE, N.O.S.	1	1.4B		1.4	178 274	LQ0	P101		MP2		
0351	ARTICLES, EXPLOSIVE, N.O.S.	1	1.4C		1.4	178 274	LQ0	P101		MP2		
0352	ARTICLES, EXPLOSIVE, N.O.S.	1	1.4D		1.4	178 274	LQ0	P101		MP2		
0353	ARTICLES, EXPLOSIVE, N.O.S.	1	1.4G		1.4	178 274	LQ0	P101		MP2		
0354	ARTICLES, EXPLOSIVE, N.O.S.	1	1.1L		1	178 274	LQ0	P101		MP1		
0355	ARTICLES, EXPLOSIVE, N.O.S.	1	1.2L		1	178 274	LQ0	P101		MP1		
0356	ARTICLES, EXPLOSIVE, N.O.S.	1	1.3L		1	178 274	LQ0	P101		MP1		
0357	SUBSTANCES, EXPLOSIVE, N.O.S.	1	1.1L		1	178 274	LQ0	P101		MP1		
0358	SUBSTANCES, EXPLOSIVE, N.O.S.	1	1.2L		1	178 274	LQ0	P101		MP1		
0359	SUBSTANCES, EXPLOSIVE, N.O.S.	1	1.3L		1	178 274	LQ0	P101		MP1		
0360	DETONATOR ASSEMBLIES, NON-ELECTRIC for blasting	1	1.1B		1		LQ0	P131		MP23		
0361	DETONATOR ASSEMBLIES, NON-ELECTRIC for blasting	1	1.4B		1.4		LQ0	P131		MP23		
0362	AMMUNITION, PRACTICE	1	1.4G		1.4		LQ0	P130 LP101	PP67 L1	MP23		
0363	AMMUNITION, PROOF	1	1.4G		1.4		LQ0	P130 LP101	PP67 L1	MP23		

ADR tank		Vehicle for tank carriage	Transport category	Special provisions for carriage				Hazard identifi-cation No.	UN No.	Name and description
Tank code	Special provisions			Packages	Bulk	Loading, unloading and handling	Operation			
4.3	4.3.5, 6.8.4	9.1.1.2	1.1.3.6	7.2.4	7.3.3	7.5.11	8.5	5.3.2.3		3.1.2
(12)	(13)	(14)	(15)	(16)	(17)	(18)	(19)	(20)	(1)	(2)
			2	V2		CV1 CV2 CV3	S1		0344	PROJECTILES with bursting charge
			4	V2		CV1 CV2 CV3	S1		0345	PROJECTILES, inert with tracer
			1	V2		CV1 CV2 CV3	S1		0346	PROJECTILES with burster or expelling charge
			2	V2		CV1 CV2 CV3	S1		0347	PROJECTILES with burster or expelling charge
			2	V2		CV1 CV2 CV3	S1		0348	CARTRIDGES FOR WEAPONS with bursting charge
			4	V2		CV1 CV2 CV3	S1		0349	ARTICLES, EXPLOSIVE, N.O.S.
			2	V2		CV1 CV2 CV3	S1		0350	ARTICLES, EXPLOSIVE, N.O.S.
			2	V2		CV1 CV2 CV3	S1		0351	ARTICLES, EXPLOSIVE, N.O.S.
			2	V2		CV1 CV2 CV3	S1		0352	ARTICLES, EXPLOSIVE, N.O.S.
			2	V2		CV1 CV2 CV3	S1		0353	ARTICLES, EXPLOSIVE, N.O.S.
			0	V2		CV1 CV2 CV3 CV4	S1		0354	ARTICLES, EXPLOSIVE, N.O.S.
			0	V2		CV1 CV2 CV3 CV4	S1		0355	ARTICLES, EXPLOSIVE, N.O.S.
			0	V2		CV1 CV2 CV3 CV4	S1		0356	ARTICLES, EXPLOSIVE, N.O.S.
			0	V2		CV1 CV2 CV3 CV4	S1		0357	SUBSTANCES, EXPLOSIVE, N.O.S.
			0	V2		CV1 CV2 CV3 CV4	S1		0358	SUBSTANCES, EXPLOSIVE, N.O.S.
			0	V2		CV1 CV2 CV3 CV4	S1		0359	SUBSTANCES, EXPLOSIVE, N.O.S.
			1	V2		CV1 CV2 CV3	S1		0360	DETONATOR ASSEMBLIES, NON-ELECTRIC for blasting
			2	V2		CV1 CV2 CV3	S1		0361	DETONATOR ASSEMBLIES, NON-ELECTRIC for blasting
			2	V2		CV1 CV2 CV3	S1		0362	AMMUNITION, PRACTICE
			2	V2		CV1 CV2 CV3	S1		0363	AMMUNITION, PROOF

UN No.	Name and description	Class	Classification code	Packing group	Labels	Special provisions	Limited quantities	Packaging			Portable tanks and bulk containers	
								Packing instructions	Special packing provisions	Mixed packing provisions	Instructions	Special provisions
	3.1.2	2.2	2.2	2.1.1.3	5.2.2	3.3	3.4.6	4.1.4	4.1.4	4.1.10	4.2.5.2 7.3.2	4.2.5.3
(1)	(2)	(3a)	(3b)	(4)	(5)	(6)	(7)	(8)	(9a)	(9b)	(10)	(11)
0364	DETONATORS FOR AMMUNITION	1	1.2B		1		LQ0	P133		MP23		
0365	DETONATORS FOR AMMUNITION	1	1.4B		1.4		LQ0	P133		MP23		
0366	DETONATORS FOR AMMUNITION	1	1.4S		1.4		LQ0	P133		MP23		
0367	FUZES, DETONATING	1	1.4S		1.4		LQ0	P141		MP23		
0368	FUZES, IGNITING	1	1.4S		1.4		LQ0	P141		MP23		
0369	WARHEADS, ROCKET with bursting charge	1	1.1F		1		LQ0	P130		MP23		
0370	WARHEADS, ROCKET with burster or expelling charge	1	1.4D		1.4		LQ0	P130 LP101	PP67 L1	MP21		
0371	WARHEADS, ROCKET with burster or expelling charge	1	1.4F		1.4		LQ0	P130		MP23		
0372	GRENADES, PRACTICE, hand or rifle	1	1.2G		1		LQ0	P141		MP23		
0373	SIGNAL DEVICES, HAND	1	1.4S		1.4		LQ0	P135		MP23 MP24		
0374	SOUNDING DEVICES, EXPLOSIVE	1	1.1D		1		LQ0	P134 LP102		MP21		
0375	SOUNDING DEVICES, EXPLOSIVE	1	1.2D		1		LQ0	P134 LP102		MP21		
0376	PRIMERS, TUBULAR	1	1.4S		1.4		LQ0	P133		MP23		
0377	PRIMERS, CAP TYPE	1	1.1B		1		LQ0	P133		MP23		
0378	PRIMERS, CAP TYPE	1	1.4B		1.4		LQ0	P133		MP23		
0379	CASES, CARTRIDGE, EMPTY, WITH PRIMER	1	1.4C		1.4		LQ0	P136		MP22		
0380	ARTICLES, PYROPHORIC	1	1.2L		1		LQ0	P101		MP1		
0381	CARTRIDGES, POWER DEVICE	1	1.2C		1		LQ0	P134 LP102		MP22		
0382	COMPONENTS, EXPLOSIVE TRAIN, N.O.S.	1	1.2B		1	178 274	LQ0	P101		MP2		
0383	COMPONENTS, EXPLOSIVE TRAIN, N.O.S.	1	1.4B		1.4	178 274	LQ0	P101		MP2		
0384	COMPONENTS, EXPLOSIVE TRAIN, N.O.S.	1	1.4S		1.4	178 274	LQ0	P101		MP2		
0385	5-NITROBENZOTRIAZOL	1	1.1D		1		LQ0	P112(b) (c)		MP20		

ADR tank		Vehicle for tank carriage	Transport category	Special provisions for carriage				Hazard identifi-cation No.	UN No.	Name and description
Tank code	Special provisions			Packages	Bulk	Loading, unloading and handling	Operation			
4.3	4.3.5, 6.8.4	9.1.1.2	1.1.3.6	7.2.4	7.3.3	7.5.11	8.5	5.3.2.3		3.1.2
(12)	(13)	(14)	(15)	(16)	(17)	(18)	(19)	(20)	(1)	(2)
			1	V2		CV1 CV2 CV3	S1		0364	DETONATORS FOR AMMUNITION
			2	V2		CV1 CV2 CV3	S1		0365	DETONATORS FOR AMMUNITION
			4	V2		CV1 CV2 CV3	S1		0366	DETONATORS FOR AMMUNITION
			4	V2		CV1 CV2 CV3	S1		0367	FUZES, DETONATING
			4	V2		CV1 CV2 CV3	S1		0368	FUZES, IGNITING
			1	V2		CV1 CV2 CV3	S1		0369	WARHEADS, ROCKET with bursting charge
			2	V2		CV1 CV2 CV3	S1		0370	WARHEADS, ROCKET with burster or expelling charge
			2	V2		CV1 CV2 CV3	S1		0371	WARHEADS, ROCKET with burster or expelling charge
			1	V2		CV1 CV2 CV3	S1		0372	GRENADES, PRACTICE, hand or rifle
			4	V2		CV1 CV2 CV3	S1		0373	SIGNAL DEVICES, HAND
			1	V2		CV1 CV2 CV3	S1		0374	SOUNDING DEVICES, EXPLOSIVE
			1	V2		CV1 CV2 CV3	S1		0375	SOUNDING DEVICES, EXPLOSIVE
			4	V2		CV1 CV2 CV3	S1		0376	PRIMERS, TUBULAR
			1	V2		CV1 CV2 CV3	S1		0377	PRIMERS, CAP TYPE
			2	V2		CV1 CV2 CV3	S1		0378	PRIMERS, CAP TYPE
			2	V2		CV1 CV2 CV3	S1		0379	CASES, CARTRIDGE, EMPTY, WITH PRIMER
			0	V2		CV1 CV2 CV3 CV4	S1		0380	ARTICLES, PYROPHORIC
			1	V2		CV1 CV2 CV3	S1		0381	CARTRIDGES, POWER DEVICE
			1	V2		CV1 CV2 CV3	S1		0382	COMPONENTS, EXPLOSIVE TRAIN, N.O.S.
			2	V2		CV1 CV2 CV3	S1		0383	COMPONENTS, EXPLOSIVE TRAIN, N.O.S.
			4	V2		CV1 CV2 CV3	S1		0384	COMPONENTS, EXPLOSIVE TRAIN, N.O.S.
			1	V2 V3		CV1 CV2 CV3	S1		0385	5-NITROBENZOTRIAZOL

UN No.	Name and description	Class	Classification code	Packing group	Labels	Special provisions	Limited quantities	Packaging			Portable tanks and bulk containers	
								Packing instructions	Special packing provisions	Mixed packing provisions	Instructions	Special provisions
	3.1.2	2.2	2.2	2.1.1.3	5.2.2	3.3	3.4.6	4.1.4	4.1.4	4.1.10	4.2.5.2 7.3.2	4.2.5.3
(1)	(2)	(3a)	(3b)	(4)	(5)	(6)	(7)	(8)	(9a)	(9b)	(10)	(11)
0386	TRINITROBENZENE-SULPHONIC ACID	1	1.1D		1		LQ0	P112(b) (c)	PP26	MP20		
0387	TRINITROFLUORENONE	1	1.1D		1		LQ0	P112(b) (c)		MP20		
0388	TRINITROTOLUENE (TNT) AND TRINITROBENZENE MIXTURE or TRINITROTOLUENE (TNT) AND HEXANITROSTILBENE MIXTURE	1	1.1D		1		LQ0	P112(b) (c)		MP20		
0389	TRINITROTOLUENE (TNT) MIXTURE CONTAINING TRINITROBENZENE AND HEXANITROSTILBENE	1	1.1D		1		LQ0	P112(b) (c)		MP20		
0390	TRITONAL	1	1.1D		1		LQ0	P112(b) (c)		MP20		
0391	CYCLOTRIMETHYLENE-TRINITRAMINE (CYCLONITE; HEXOGEN; RDX) AND CYCLOTETRAMETHYLENE-TETRANITRAMINE (HMX; OCTOGEN) MIXTURE, WETTED with not less than 15% water, by mass or DESENSITIZED with not less than 10% phlegmatiser by mass	1	1.1D		1	266	LQ0	P112(a) (b)		MP20		
0392	HEXANITROSTILBENE	1	1.1D		1		LQ0	P112(b) (c)		MP20		
0393	HEXOTONAL	1	1.1D		1		LQ0	P112(b)		MP20		
0394	TRINITRORESORCINOL (STYPHNIC ACID), WETTED with not less than 20% water, or mixture of alcohol and water, by mass	1	1.1D		1		LQ0	P112(a)	PP26	MP20		
0395	ROCKET MOTORS, LIQUID FUELLED	1	1.2J		1		LQ0	P101		MP23		
0396	ROCKET MOTORS, LIQUID FUELLED	1	1.3J		1		LQ0	P101		MP23		
0397	ROCKETS, LIQUID FUELLED with bursting charge	1	1.1J		1		LQ0	P101		MP23		
0398	ROCKETS, LIQUID FUELLED with bursting charge	1	1.2J		1		LQ0	P101		MP23		
0399	BOMBS WITH FLAMMABLE LIQUID with bursting charge	1	1.1J		1		LQ0	P101		MP23		
0400	BOMBS WITH FLAMMABLE LIQUID with bursting charge	1	1.2J		1		LQ0	P101		MP23		

ADR tank		Vehicle for tank carriage	Transport category	Special provisions for carriage				Hazard identification No.	UN No.	Name and description
Tank code	Special provisions			Packages	Bulk	Loading, unloading and handling	Operation			
4.3	4.3.5, 6.8.4	9.1.1.2	1.1.3.6	7.2.4	7.3.3	7.5.11	8.5	5.3.2.3		3.1.2
(12)	(13)	(14)	(15)	(16)	(17)	(18)	(19)	(20)	(1)	(2)
			1	V2 V3		CV1 CV2 CV3	S1		0386	TRINITROBENZENE-SULPHONIC ACID
			1	V2 V3		CV1 CV2 CV3	S1		0387	TRINITROFLUORENONE
			1	V2 V3		CV1 CV2 CV3	S1		0388	TRINITROTOLUENE (TNT) AND TRINITROBENZENE MIXTURE or TRINITROTOLUENE (TNT) AND HEXANITROSTILBENE MIXTURE
			1	V2 V3		CV1 CV2 CV3	S1		0389	TRINITROTOLUENE (TNT) MIXTURE CONTAINING TRINITROBENZENE AND HEXANITROSTILBENE
			1	V2 V3		CV1 CV2 CV3	S1		0390	TRITONAL
			1	V2 V3		CV1 CV2 CV3	S1		0391	CYCLOTRIMETHYLENE-TRINITRAMINE (CYCLONITE; HEXOGEN; RDX) AND CYCLOTETRAMETHYLENE-TETRANITRAMINE (HMX; OCTOGEN) MIXTURE, WETTED with not less than 15% water, by mass or DESENSITIZED with not less than 10% phlegmatiser by mass
			1	V2 V3		CV1 CV2 CV3	S1		0392	HEXANITROSTILBENE
			1	V2 V3		CV1 CV2 CV3	S1		0393	HEXOTONAL
			1	V2		CV1 CV2 CV3	S1		0394	TRINITRORESORCINOL (STYPHNIC ACID), WETTED with not less than 20% water, or mixture of alcohol and water, by mass
			1	V2		CV1 CV2 CV3	S1		0395	ROCKET MOTORS, LIQUID FUELLED
			1	V2		CV1 CV2 CV3	S1		0396	ROCKET MOTORS, LIQUID FUELLED
			1	V2		CV1 CV2 CV3	S1		0397	ROCKETS, LIQUID FUELLED with bursting charge
			1	V2		CV1 CV2 CV3	S1		0398	ROCKETS, LIQUID FUELLED with bursting charge
			1	V2		CV1 CV2 CV3	S1		0399	BOMBS WITH FLAMMABLE LIQUID with bursting charge
			1	V2		CV1 CV2 CV3	S1		0400	BOMBS WITH FLAMMABLE LIQUID with bursting charge

UN No.	Name and description	Class	Classification code	Packing group	Labels	Special provisions	Limited quantities	Packaging			Portable tanks and bulk containers	
								Packing instructions	Special packing provisions	Mixed packing provisions	Instructions	Special provisions
	3.1.2	2.2	2.2	2.1.1.3	5.2.2	3.3	3.4.6	4.1.4	4.1.4	4.1.10	4.2.5.2 7.3.2	4.2.5.3
(1)	(2)	(3a)	(3b)	(4)	(5)	(6)	(7)	(8)	(9a)	(9b)	(10)	(11)
0401	DIPICRYL SULPHIDE, dry or wetted with less than 10% water, by mass	1	1.1D		1		LQ0	P112(a) (b) or (c)		MP20		
0402	AMMONIUM PERCHLORATE	1	1.1D		1	152	LQ0	P112(b) (c)		MP20		
0403	FLARES, AERIAL	1	1.4G		1.4		LQ0	P135		MP23		
0404	FLARES, AERIAL	1	1.4S		1.4		LQ0	P135		MP23		
0405	CARTRIDGES, SIGNAL	1	1.4S		1.4		LQ0	P135		MP23 MP24		
0406	DINITROSOBENZENE	1	1.3C		1		LQ0	P114(b)		MP20		
0407	TETRAZOL-1-ACETIC ACID	1	1.4C		1.4		LQ0	P114(b)		MP20		
0408	FUZES, DETONATING with protective features	1	1.1D		1		LQ0	P141		MP21		
0409	FUZES, DETONATING with protective features	1	1.2D		1		LQ0	P141		MP21		
0410	FUZES, DETONATING with protective features	1	1.4D		1.4		LQ0	P141		MP21		
0411	PENTAERYTHRITE TETRANITRATE (PENTAERYTHRITOL TETRANITRATE; PETN) with not less than 7% wax, by mass	1	1.1D		1	131	LQ0	P112(b) (c)		MP20		
0412	CARTRIDGES FOR WEAPONS with bursting charge	1	1.4E		1.4		LQ0	P130 LP101	PP67 L1	MP21		
0413	CARTRIDGES FOR WEAPONS, BLANK	1	1.2C		1		LQ0	P130		MP22		
0414	CHARGES, PROPELLING, FOR CANNON	1	1.2C		1		LQ0	P130		MP22		
0415	CHARGES, PROPELLING	1	1.2C		1		LQ0	P143	PP76	MP22		
0417	CARTRIDGES FOR WEAPONS, INERT PROJECTILE or CARTRIDGES, SMALL ARMS	1	1.3C		1		LQ0	P130		MP22		
0418	FLARES, SURFACE	1	1.1G		1		LQ0	P135		MP23		
0419	FLARES, SURFACE	1	1.2G		1		LQ0	P135		MP23		
0420	FLARES, AERIAL	1	1.1G		1		LQ0	P135		MP23		
0421	FLARES, AERIAL	1	1.2G		1		LQ0	P135		MP23		

ADR tank		Vehicle for tank carriage	Transport category	Special provisions for carriage				Hazard identifi-cation No.	UN No.	Name and description
Tank code	Special provisions			Packages	Bulk	Loading, unloading and handling	Operation			
4.3	4.3.5, 6.8.4	9.1.1.2	1.1.3.6	7.2.4	7.3.3	7.5.11	8.5	5.3.2.3		3.1.2
(12)	(13)	(14)	(15)	(16)	(17)	(18)	(19)	(20)	(1)	(2)
			1	V2 V3		CV1 CV2 CV3	S1		0401	DIPICRYL SULPHIDE, dry or wetted with less than 10% water, by mass
			1	V2 V3		CV1 CV2 CV3	S1		0402	AMMONIUM PERCHLORATE
			2	V2		CV1 CV2 CV3	S1		0403	FLARES, AERIAL
			4	V2		CV1 CV2 CV3	S1		0404	FLARES, AERIAL
			4	V2		CV1 CV2 CV3	S1		0405	CARTRIDGES, SIGNAL
			1	V2 V3		CV1 CV2 CV3	S1		0406	DINITROSOBENZENE
			2	V2		CV1 CV2 CV3	S1		0407	TETRAZOL-1-ACETIC ACID
			1	V2		CV1 CV2 CV3	S1		0408	FUZES, DETONATING with protective features
			1	V2		CV1 CV2 CV3	S1		0409	FUZES, DETONATING with protective features
			2	V2		CV1 CV2 CV3	S1		0410	FUZES, DETONATING with protective features
			1	V2 V3		CV1 CV2 CV3	S1		0411	PENTAERYTHRITE TETRANITRATE (PENTAERYTHRITOL TETRANITRATE; PETN) with not less than 7% wax, by mass
			2	V2		CV1 CV2 CV3	S1		0412	CARTRIDGES FOR WEAPONS with bursting charge
			1	V2		CV1 CV2 CV3	S1		0413	CARTRIDGES FOR WEAPONS, BLANK
			1	V2		CV1 CV2 CV3	S1		0414	CHARGES, PROPELLING, FOR CANNON
			1	V2		CV1 CV2 CV3	S1		0415	CHARGES, PROPELLING
			1	V2		CV1 CV2 CV3	S1		0417	CARTRIDGES FOR WEAPONS, INERT PROJECTILE or CARTRIDGES, SMALL ARMS
			1	V2		CV1 CV2 CV3	S1		0418	FLARES, SURFACE
			1	V2		CV1 CV2 CV3	S1		0419	FLARES, SURFACE
			1	V2		CV1 CV2 CV3	S1		0420	FLARES, AERIAL
			1	V2		CV1 CV2 CV3	S1		0421	FLARES, AERIAL

UN No.	Name and description	Class	Classification code	Packing group	Labels	Special provisions	Limited quantities	Packaging			Portable tanks and bulk containers	
								Packing instructions	Special packing provisions	Mixed packing provisions	Instructions	Special provisions
	3.1.2	2.2	2.2	2.1.1.3	5.2.2	3.3	3.4.6	4.1.4	4.1.4	4.1.10	4.2.5.2 7.3.2	4.2.5.3
(1)	(2)	(3a)	(3b)	(4)	(5)	(6)	(7)	(8)	(9a)	(9b)	(10)	(11)
0424	PROJECTILES, inert with tracer	1	1.3G		1		LQ0	P130 LP101	PP67 L1	MP23		
0425	PROJECTILES, inert with tracer	1	1.4G		1.4		LQ0	P130 LP101	PP67 L1	MP23		
0426	PROJECTILES with burster or expelling charge	1	1.2F		1		LQ0	P130		MP23		
0427	PROJECTILES with burster or expelling charge	1	1.4F		1.4		LQ0	P130		MP23		
0428	ARTICLES, PYROTECHNIC for technical purposes	1	1.1G		1		LQ0	P135		MP23 MP24		
0429	ARTICLES, PYROTECHNIC for technical purposes	1	1.2G		1		LQ0	P135		MP23 MP24		
0430	ARTICLES, PYROTECHNIC for technical purposes	1	1.3G		1		LQ0	P135		MP23 MP24		
0431	ARTICLES, PYROTECHNIC for technical purposes	1	1.4G		1.4		LQ0	P135		MP23 MP24		
0432	ARTICLES, PYROTECHNIC for technical purposes	1	1.4S		1.4		LQ0	P135		MP23 MP24		
0433	POWDER CAKE (POWDER PASTE), WETTED with not less than 17% alcohol, by mass	1	1.1C		1	266	LQ0	P111		MP20		
0434	PROJECTILES with burster or expelling charge	1	1.2G		1		LQ0	P130 LP101	PP67 L1	MP23		
0435	PROJECTILES with burster or expelling charge	1	1.4G		1.4		LQ0	P130 LP101	PP67 L1	MP23		
0436	ROCKETS with expelling charge	1	1.2C		1		LQ0	P130 LP101	PP67 L1	MP22		
0437	ROCKETS with expelling charge	1	1.3C		1		LQ0	P130 LP101	PP67 L1	MP22		
0438	ROCKETS with expelling charge	1	1.4C		1.4		LQ0	P130 LP101	PP67 L1	MP22		
0439	CHARGES, SHAPED, without detonator	1	1.2D		1		LQ0	P137	PP70	MP21		
0440	CHARGES, SHAPED, without detonator	1	1.4D		1.4		LQ0	P137	PP70	MP21		
0441	CHARGES, SHAPED, without detonator	1	1.4S		1.4		LQ0	P137	PP70	MP23		
0442	CHARGES, EXPLOSIVE, COMMERCIAL without detonator	1	1.1D		1		LQ0	P137		MP21		
0443	CHARGES, EXPLOSIVE, COMMERCIAL without detonator	1	1.2D		1		LQ0	P137		MP21		
0444	CHARGES, EXPLOSIVE, COMMERCIAL without detonator	1	1.4D		1.4		LQ0	P137		MP21		
0445	CHARGES, EXPLOSIVE, COMMERCIAL without detonator	1	1.4S		1.4		LQ0	P137		MP23		

ADR tank		Vehicle for tank carriage	Transport category	Special provisions for carriage				Hazard identifi-cation No.	UN No.	Name and description
Tank code	Special provisions			Packages	Bulk	Loading, unloading and handling	Operation			
4.3	4.3.5, 6.8.4	9.1.1.2	1.1.3.6	7.2.4	7.3.3	7.5.11	8.5	5.3.2.3		3.1.2
(12)	(13)	(14)	(15)	(16)	(17)	(18)	(19)	(20)	(1)	(2)
			1	V2		CV1 CV2 CV3	S1		0424	PROJECTILES, inert with tracer
			2	V2		CV1 CV2 CV3	S1		0425	PROJECTILES, inert with tracer
			1	V2		CV1 CV2 CV3	S1		0426	PROJECTILES with burster or expelling charge
			2	V2		CV1 CV2 CV3	S1		0427	PROJECTILES with burster or expelling charge
			1	V2		CV1 CV2 CV3	S1		0428	ARTICLES, PYROTECHNIC for technical purposes
			1	V2		CV1 CV2 CV3	S1		0429	ARTICLES, PYROTECHNIC for technical purposes
			1	V2		CV1 CV2 CV3	S1		0430	ARTICLES, PYROTECHNIC for technical purposes
			2	V2		CV1 CV2 CV3	S1		0431	ARTICLES, PYROTECHNIC for technical purposes
			4	V2		CV1 CV2 CV3	S1		0432	ARTICLES, PYROTECHNIC for technical purposes
			1	V2		CV1 CV2 CV3	S1		0433	POWDER CAKE (POWDER PASTE), WETTED with not less than 17% alcohol, by mass
			1	V2		CV1 CV2 CV3	S1		0434	PROJECTILES with burster or expelling charge
			2	V2		CV1 CV2 CV3	S1		0435	PROJECTILES with burster or expelling charge
			1	V2		CV1 CV2 CV3	S1		0436	ROCKETS with expelling charge
			1	V2		CV1 CV2 CV3	S1		0437	ROCKETS with expelling charge
			2	V2		CV1 CV2 CV3	S1		0438	ROCKETS with expelling charge
			1	V2		CV1 CV2 CV3	S1		0439	CHARGES, SHAPED, without detonator
			2	V2		CV1 CV2 CV3	S1		0440	CHARGES, SHAPED, without detonator
			4	V2		CV1 CV2 CV3	S1		0441	CHARGES, SHAPED, without detonator
			1	V2		CV1 CV2 CV3	S1		0442	CHARGES, EXPLOSIVE, COMMERCIAL without detonator
			1	V2		CV1 CV2 CV3	S1		0443	CHARGES, EXPLOSIVE, COMMERCIAL without detonator
			2	V2		CV1 CV2 CV3	S1		0444	CHARGES, EXPLOSIVE, COMMERCIAL without detonator
			4	V2		CV1 CV2 CV3	S1		0445	CHARGES, EXPLOSIVE, COMMERCIAL without detonator

UN No.	Name and description	Class	Classification code	Packing group	Labels	Special provisions	Limited quantities	Packaging			Portable tanks and bulk containers	
								Packing instructions	Special packing provisions	Mixed packing provisions	Instructions	Special provisions
	3.1.2	2.2	2.2	2.1.1.3	5.2.2	3.3	3.4.6	4.1.4	4.1.4	4.1.10	4.2.5.2 7.3.2	4.2.5.3
(1)	(2)	(3a)	(3b)	(4)	(5)	(6)	(7)	(8)	(9a)	(9b)	(10)	(11)
0446	CASES, COMBUSTIBLE, EMPTY, WITHOUT PRIMER	1	1.4C		1.4		LQ0	P136		MP22		
0447	CASES, COMBUSTIBLE, EMPTY, WITHOUT PRIMER	1	1.3C		1		LQ0	P136		MP22		
0448	5-MERCAPTOTETRAZOL-1-ACETIC ACID	1	1.4C		1.4		LQ0	P114(b)		MP20		
0449	TORPEDOES, LIQUID FUELLED with or without bursting charge	1	1.1J		1		LQ0	P101		MP23		
0450	TORPEDOES, LIQUID FUELLED with inert head	1	1.3J		1		LQ0	P101		MP23		
0451	TORPEDOES with bursting charge	1	1.1D		1		LQ0	P130 LP101	PP67 L1	MP21		
0452	GRENADES, PRACTICE, hand or rifle	1	1.4G		1.4		LQ0	P141		MP23		
0453	ROCKETS, LINE-THROWING	1	1.4G		1.4		LQ0	P130		MP23		
0454	IGNITERS	1	1.4S		1.4		LQ0	P142		MP23		
0455	DETONATORS, NON-ELECTRIC for blasting	1	1.4S		1.4		LQ0	P131	PP68	MP23		
0456	DETONATORS, ELECTRIC for blasting	1	1.4S		1.4		LQ0	P131		MP23		
0457	CHARGES, BURSTING, PLASTICS BONDED	1	1.1D		1		LQ0	P130		MP21		
0458	CHARGES, BURSTING, PLASTICS BONDED	1	1.2D		1		LQ0	P130		MP21		
0459	CHARGES, BURSTING, PLASTICS BONDED	1	1.4D		1.4		LQ0	P130		MP21		
0460	CHARGES, BURSTING, PLASTICS BONDED	1	1.4S		1.4		LQ0	P130		MP23		
0461	COMPONENTS, EXPLOSIVE TRAIN, N.O.S.	1	1.1B		1	178 274	LQ0	P101		MP2		
0462	ARTICLES, EXPLOSIVE, N.O.S.	1	1.1C		1	178 274	LQ0	P101		MP2		
0463	ARTICLES, EXPLOSIVE, N.O.S.	1	1.1D		1	178 274	LQ0	P101		MP2		
0464	ARTICLES, EXPLOSIVE, N.O.S.	1	1.1E		1	178 274	LQ0	P101		MP2		
0465	ARTICLES, EXPLOSIVE, N.O.S.	1	1.1F		1	178 274	LQ0	P101		MP2		
0466	ARTICLES, EXPLOSIVE, N.O.S.	1	1.2C		1	178 274	LQ0	P101		MP2		
0467	ARTICLES, EXPLOSIVE, N.O.S.	1	1.2D		1	178 274	LQ0	P101		MP2		

ADR tank		Vehicle for tank carriage	Transport category	Special provisions for carriage				Hazard identification No.	UN No.	Name and description
Tank code	Special provisions			Packages	Bulk	Loading, unloading and handling	Operation			
4.3	4.3.5, 6.8.4	9.1.1.2	1.1.3.6	7.2.4	7.3.3	7.5.11	8.5	5.3.2.3		3.1.2
(12)	(13)	(14)	(15)	(16)	(17)	(18)	(19)	(20)	(1)	(2)
			2	V2		CV1 CV2 CV3	S1		0446	CASES, COMBUSTIBLE, EMPTY, WITHOUT PRIMER
			1	V2		CV1 CV2 CV3	S1		0447	CASES, COMBUSTIBLE, EMPTY, WITHOUT PRIMER
			2	V2		CV1 CV2 CV3	S1		0448	5-MERCAPTOTETRAZOL-1-ACETIC ACID
			1	V2		CV1 CV2 CV3	S1		0449	TORPEDOES, LIQUID FUELLED with or without bursting charge
			1	V2		CV1 CV2 CV3	S1		0450	TORPEDOES, LIQUID FUELLED with inert head
			1	V2		CV1 CV2 CV3	S1		0451	TORPEDOES with bursting charge
			2	V2		CV1 CV2 CV3	S1		0452	GRENADES, PRACTICE, hand or rifle
			2	V2		CV1 CV2 CV3	S1		0453	ROCKETS, LINE-THROWING
			4	V2		CV1 CV2 CV3	S1		0454	IGNITERS
			4	V2		CV1 CV2 CV3	S1		0455	DETONATORS, NON-ELECTRIC for blasting
			4	V2		CV1 CV2 CV3	S1		0456	DETONATORS, ELECTRIC for blasting
			1	V2		CV1 CV2 CV3	S1		0457	CHARGES, BURSTING, PLASTICS BONDED
			1	V2		CV1 CV2 CV3	S1		0458	CHARGES, BURSTING, PLASTICS BONDED
			2	V2		CV1 CV2 CV3	S1		0459	CHARGES, BURSTING, PLASTICS BONDED
			4	V2		CV1 CV2 CV3	S1		0460	CHARGES, BURSTING, PLASTICS BONDED
			1	V2		CV1 CV2 CV3	S1		0461	COMPONENTS, EXPLOSIVE TRAIN, N.O.S.
			1	V2		CV1 CV2 CV3	S1		0462	ARTICLES, EXPLOSIVE, N.O.S.
			1	V2		CV1 CV2 CV3	S1		0463	ARTICLES, EXPLOSIVE, N.O.S.
			1	V2		CV1 CV2 CV3	S1		0464	ARTICLES, EXPLOSIVE, N.O.S.
			1	V2		CV1 CV2 CV3	S1		0465	ARTICLES, EXPLOSIVE, N.O.S.
			1	V2		CV1 CV2 CV3	S1		0466	ARTICLES, EXPLOSIVE, N.O.S.
			1	V2		CV1 CV2 CV3	S1		0467	ARTICLES, EXPLOSIVE, N.O.S.

UN No.	Name and description	Class	Classification code	Packing group	Labels	Special provisions	Limited quantities	Packaging			Portable tanks and bulk containers	
								Packing instructions	Special packing provisions	Mixed packing provisions	Instructions	Special provisions
	3.1.2	2.2	2.2	2.1.1.3	5.2.2	3.3	3.4.6	4.1.4	4.1.4	4.1.10	4.2.5.2 7.3.2	4.2.5.3
(1)	(2)	(3a)	(3b)	(4)	(5)	(6)	(7)	(8)	(9a)	(9b)	(10)	(11)
0468	ARTICLES, EXPLOSIVE, N.O.S.	1	1.2E		1	178 274	LQ0	P101		MP2		
0469	ARTICLES, EXPLOSIVE, N.O.S.	1	1.2F		1	178 274	LQ0	P101		MP2		
0470	ARTICLES, EXPLOSIVE, N.O.S.	1	1.3C		1	178 274	LQ0	P101		MP2		
0471	ARTICLES, EXPLOSIVE, N.O.S.	1	1.4E		1.4	178 274	LQ0	P101		MP2		
0472	ARTICLES, EXPLOSIVE, N.O.S.	1	1.4F		1.4	178 274	LQ0	P101		MP2		
0473	SUBSTANCES, EXPLOSIVE, N.O.S.	1	1.1A		1	178 274	LQ0	P101		MP2		
0474	SUBSTANCES, EXPLOSIVE, N.O.S.	1	1.1C		1	178 274	LQ0	P101		MP2		
0475	SUBSTANCES, EXPLOSIVE, N.O.S.	1	1.1D		1	178 274	LQ0	P101		MP2		
0476	SUBSTANCES, EXPLOSIVE, N.O.S.	1	1.1G		1	178 274	LQ0	P101		MP2		
0477	SUBSTANCES, EXPLOSIVE, N.O.S.	1	1.3C		1	178 274	LQ0	P101		MP2		
0478	SUBSTANCES, EXPLOSIVE, N.O.S.	1	1.3G		1	178 274	LQ0	P101		MP2		
0479	SUBSTANCES, EXPLOSIVE, N.O.S.	1	1.4C		1.4	178 274	LQ0	P101		MP2		
0480	SUBSTANCES, EXPLOSIVE, N.O.S.	1	1.4D		1.4	178 274	LQ0	P101		MP2		
0481	SUBSTANCES, EXPLOSIVE, N.O.S.	1	1.4S		1.4	178 274	LQ0	P101		MP2		
0482	SUBSTANCES, EXPLOSIVE, VERY INSENSITIVE (SUBSTANCES, EVI), N.O.S.	1	1.5D		1.5	178 274	LQ0	P101		MP2		
0483	CYCLOTRIMETHYLENE-TRINITRAMINE (CYCLONITE; HEXOGEN; RDX), DESENSITIZED	1	1.1D		1		LQ0	P112(b) (c)		MP20		
0484	CYCLOTETRAMETHYLENE-TETRA-NITRAMINE (HMX; OCTOGEN), DESENSITIZED	1	1.1D		1		LQ0	P112(b) (c)		MP20		
0485	SUBSTANCES, EXPLOSIVE, N.O.S.	1	1.4G		1.4	178 274	LQ0	P101		MP2		
0486	ARTICLES, EXPLOSIVE, EXTREMELY INSENSITIVE (ARTICLES, EEI)	1	1.6N		1.6		LQ0	P101		MP23		
0487	SIGNALS, SMOKE	1	1.3G		1		LQ0	P135		MP23		

ADR tank		Vehicle for tank carriage	Transport category	Special provisions for carriage				Hazard identifi-cation No.	UN No.	Name and description
Tank code	Special provisions			Packages	Bulk	Loading, unloading and handling	Operation			
4.3	4.3.5, 6.8.4	9.1.1.2	1.1.3.6	7.2.4	7.3.3	7.5.11	8.5	5.3.2.3		3.1.2
(12)	(13)	(14)	(15)	(16)	(17)	(18)	(19)	(20)	(1)	(2)
			1	V2		CV1 CV2 CV3	S1		0468	ARTICLES, EXPLOSIVE, N.O.S.
			1	V2		CV1 CV2 CV3	S1		0469	ARTICLES, EXPLOSIVE, N.O.S.
			1	V2		CV1 CV2 CV3	S1		0470	ARTICLES, EXPLOSIVE, N.O.S.
			2	V2		CV1 CV2 CV3	S1		0471	ARTICLES, EXPLOSIVE, N.O.S.
			2	V2		CV1 CV2 CV3	S1		0472	ARTICLES, EXPLOSIVE, N.O.S.
			0	V2		CV1 CV2 CV3	S1		0473	SUBSTANCES, EXPLOSIVE, N.O.S.
			1	V2 V3		CV1 CV2 CV3	S1		0474	SUBSTANCES, EXPLOSIVE, N.O.S.
			1	V2 V3		CV1 CV2 CV3	S1		0475	SUBSTANCES, EXPLOSIVE, N.O.S.
			1	V2 V3		CV1 CV2 CV3	S1		0476	SUBSTANCES, EXPLOSIVE, N.O.S.
			1	V2 V3		CV1 CV2 CV3	S1		0477	SUBSTANCES, EXPLOSIVE, N.O.S.
			1	V2 V3		CV1 CV2 CV3	S1		0478	SUBSTANCES, EXPLOSIVE, N.O.S.
			2	V2		CV1 CV2 CV3	S1		0479	SUBSTANCES, EXPLOSIVE, N.O.S.
			2	V2		CV1 CV2 CV3	S1		0480	SUBSTANCES, EXPLOSIVE, N.O.S.
			4	V2		CV1 CV2 CV3	S1		0481	SUBSTANCES, EXPLOSIVE, N.O.S.
			1	V2		CV1 CV2 CV3	S1		0482	SUBSTANCES, EXPLOSIVE, VERY INSENSITIVE (SUBSTANCES, EVI), N.O.S.
			1	V2 V3		CV1 CV2 CV3	S1		0483	CYCLOTRIMETHYLENE-TRINITRAMINE (CYCLONITE; HEXOGEN; RDX), DESENSITIZED
			1	V2 V3		CV1 CV2 CV3	S1		0484	CYCLOTETRAMETHYLENE-TETRA-NITRAMINE (HMX; OCTOGEN), DESENSITIZED
			2	V2 V3		CV1 CV2 CV3	S1		0485	SUBSTANCES, EXPLOSIVE, N.O.S.
			2	V2		CV1 CV2 CV3	S1		0486	ARTICLES, EXPLOSIVE, EXTREMELY INSENSITIVE (ARTICLES, EEI)
			1	V2		CV1 CV2 CV3	S1		0487	SIGNALS, SMOKE

UN No.	Name and description	Class	Classification code	Packing group	Labels	Special provisions	Limited quantities	Packaging			Portable tanks and bulk containers	
								Packing instructions	Special packing provisions	Mixed packing provisions	Instructions	Special provisions
	3.1.2	2.2	2.2	2.1.1.3	5.2.2	3.3	3.4.6	4.1.4	4.1.4	4.1.10	4.2.5.2 7.3.2	4.2.5.3
(1)	(2)	(3a)	(3b)	(4)	(5)	(6)	(7)	(8)	(9a)	(9b)	(10)	(11)
0488	AMMUNITION, PRACTICE	1	1.3G		1		LQ0	P130 LP101	PP67 L1	MP23		
0489	DINITROGLYCOLURIL (DINGU)	1	1.1D		1		LQ0	P112(b) (c)		MP20		
0490	NITROTRIAZOLONE (NTO)	1	1.1D		1		LQ0	P112(b) (c)		MP20		
0491	CHARGES, PROPELLING	1	1.4C		1.4		LQ0	P143	PP76	MP22		
0492	SIGNALS, RAILWAY TRACK, EXPLOSIVE	1	1.3G		1		LQ0	P135		MP23		
0493	SIGNALS, RAILWAY TRACK, EXPLOSIVE	1	1.4G		1.4		LQ0	P135		MP23		
0494	JET PERFORATING GUNS, CHARGED, oil well, without detonator	1	1.4D		1.4		LQ0	P101		MP21		
0495	PROPELLANT, LIQUID	1	1.3C		1	224	LQ0	P115	PP53 PP54 PP57 PP58	MP20		
0496	OCTONAL	1	1.1D		1		LQ0	P112(b) (c)		MP20		
0497	PROPELLANT, LIQUID	1	1.1C		1	224	LQ0	P115	PP53 PP54 PP57 PP58	MP20		
0498	PROPELLANT, SOLID	1	1.1C		1		LQ0	P114(b)		MP20		
0499	PROPELLANT, SOLID	1	1.3C		1		LQ0	P114(b)		MP20		
0500	DETONATOR ASSEMBLIES, NON-ELECTRIC for blasting	1	1.4S		1.4		LQ0	P131		MP23		
0501	PROPELLANT, SOLID	1	1.4C		1.4		LQ0	P114(b)		MP20		
0502	ROCKETS with inert head	1	1.2C		1		LQ0	P130 LP101	PP67 L1	MP22		
0503	AIR BAG INFLATORS or AIR BAG MODULES or SEAT-BELT PRETENSIONERS	1	1.4G		1.4	235 289	LQ0	P135		MP23		
0504	1H-TETRAZOLE	1	1.1D		1		LQ0	P112(c)	PP48	MP20		
1001	ACETYLENE, DISSOLVED	2	4F		2.1		LQ0	P200		MP9		
1002	AIR, COMPRESSED	2	1A		2.2	292	LQ1	P200		MP9	(M)	
1003	AIR, REFRIGERATED LIQUID	2	3O		2.2 +5.1		LQ0	P203		MP9	T75	TP5 TP22
1005	AMMONIA, ANHYDROUS	2	2TC		2.3 +8	23	LQ0	P200		MP9	(M) T50	

ADR tank		Vehicle for tank carriage	Transport category	Special provisions for carriage				Hazard identifi-cation No.	UN No.	Name and description
Tank code	Special provisions			Packages	Bulk	Loading, unloading and handling	Operation			
4.3	4.3.5, 6.8.4	9.1.1.2	1.1.3.6	7.2.4	7.3.3	7.5.11	8.5	5.3.2.3		3.1.2
(12)	(13)	(14)	(15)	(16)	(17)	(18)	(19)	(20)	(1)	(2)
			1	V2		CV1 CV2 CV3	S1		0488	AMMUNITION, PRACTICE
			1	V2 V3		CV1 CV2 CV3	S1		0489	DINITROGLYCOLURIL (DINGU)
			1	V2 V3		CV1 CV2 CV3	S1		0490	NITROTRIAZOLONE (NTO)
			2	V2		CV1 CV2 CV3	S1		0491	CHARGES, PROPELLING
			1	V2		CV1 CV2 CV3	S1		0492	SIGNALS, RAILWAY TRACK, EXPLOSIVE
			2	V2		CV1 CV2 CV3	S1		0493	SIGNALS, RAILWAY TRACK, EXPLOSIVE
			2	V2		CV1 CV2 CV3	S1		0494	JET PERFORATING GUNS, CHARGED, oil well, without detonator
			1	V2		CV1 CV2 CV3	S1		0495	PROPELLANT, LIQUID
			1	V2 V3		CV1 CV2 CV3	S1		0496	OCTONAL
			1	V2		CV1 CV2 CV3	S1		0497	PROPELLANT, LIQUID
			1	V2		CV1 CV2 CV3	S1		0498	PROPELLANT, SOLID
			1	V2		CV1 CV2 CV3	S1		0499	PROPELLANT, SOLID
			4	V2		CV1 CV2 CV3	S1		0500	DETONATOR ASSEMBLIES, NON-ELECTRIC for blasting
			2	V2		CV1 CV2 CV3	S1		0501	PROPELLANT, SOLID
			1	V2		CV1 CV2 CV3	S1		0502	ROCKETS with inert head
			2	V2		CV1 CV2 CV3	S1		0503	AIR BAG INFLATORS or AIR BAG MODULES or SEAT-BELT PRETENSIONERS
			1	V2 V3		CV1 CV2 CV3	S1		0504	1H-TETRAZOLE
PxBN(M)	TU17	FL	2			CV9 CV10 CV36	S2	239	1001	ACETYLENE, DISSOLVED
CxBN(M)		AT	3			CV9 CV10		20	1002	AIR, COMPRESSED
RxBN	TU7 TU19	AT	3	V5		CV9 CV11 CV36	S20	225	1003	AIR, REFRIGERATED LIQUID
PxBH(M)	TT8	AT	1			CV9 CV10 CV36	S7 S17	268	1005	AMMONIA, ANHYDROUS

UN No.	Name and description	Class	Classification code	Packing group	Labels	Special provisions	Limited quantities	Packaging			Portable tanks and bulk containers	
								Packing instructions	Special packing provisions	Mixed packing provisions	Instructions	Special provisions
	3.1.2	2.2	2.2	2.1.1.3	5.2.2	3.3	3.4.6	4.1.4	4.1.4	4.1.10	4.2.5.2 7.3.2	4.2.5.3
(1)	(2)	(3a)	(3b)	(4)	(5)	(6)	(7)	(8)	(9a)	(9b)	(10)	(11)
1006	ARGON, COMPRESSED	2	1A		2.2		LQ1	P200		MP9	(M)	
1008	BORON TRIFLUORIDE	2	2TC		2.3 +8		LQ0	P200		MP9	(M)	
1009	BROMOTRIFLUORO-METHANE (REFRIGERANT GAS R 13B1)	2	2A		2.2		LQ1	P200		MP9	(M) T50	
1010	BUTADIENES, STABILIZED or BUTADIENES AND HYDROCARBON MIXTURE, STABILIZED, having a vapour pressure at 70 °C not exceeding 1.1 Mpa (11 bar) and a density at 50 °C not lower than 0.525 kg/l	2	2F		2.1	618	LQ0	P200		MP9	(M) T50	
1011	BUTANE	2	2F		2.1		LQ0	P200		MP9	(M) T50	
1012	BUTYLENES MIXTURE or 1-BUTYLENE or CIS-2-BUTYLENE or TRANS-2-BUTYLENE	2	2F		2.1		LQ0	P200		MP9	(M) T50	
1013	CARBON DIOXIDE	2	2A		2.2	584	LQ1	P200		MP9	(M)	
1014	CARBON DIOXIDE AND OXYGEN MIXTURE, COMPRESSED	2	1O		2.2 +5.1		LQ0	P200		MP9	(M)	
1015	CARBON DIOXIDE AND NITROUS OXIDE MIXTURE	2	2A		2.2		LQ1	P200		MP9	(M)	
1016	CARBON MONOXIDE, COMPRESSED	2	1TF		2.3 +2.1		LQ0	P200		MP9	(M)	
1017	CHLORINE	2	2TC		2.3 +8		LQ0	P200		MP9	(M) T50	TP19
1018	CHLORODIFLUORO-METHANE (REFRIGERANT GAS R 22)	2	2A		2.2		LQ1	P200		MP9	(M) T50	
1020	CHLOROPENTAFLUORO-ETHANE (REFRIGERANT GAS R 115)	2	2A		2.2		LQ1	P200		MP9	(M) T50	
1021	1-CHLORO-1,2,2,2-TETRAFLUOROETHANE (REFRIGERANT GAS R 124)	2	2A		2.2		LQ1	P200		MP9	(M) T50	
1022	CHLOROTRIFLUORO-METHANE (REFRIGERANT GAS R 13)	2	2A		2.2		LQ1	P200		MP9	(M)	
1023	COAL GAS, COMPRESSED	2	1TF		2.3 +2.1		LQ0	P200		MP9	(M)	
1026	CYANOGEN	2	2TF		2.3 +2.1		LQ0	P200		MP9	(M)	
1027	CYCLOPROPANE	2	2F		2.1		LQ0	P200		MP9	(M) T50	
1028	DICHLORODIFLUORO-METHANE (REFRIGERANT GAS R 12)	2	2A		2.2		LQ1	P200		MP9	(M) T50	

ADR tank		Vehicle for tank carriage	Transport category	Special provisions for carriage				Hazard identifi-cation No.	UN No.	Name and description
Tank code	Special provisions			Packages	Bulk	Loading, unloading and handling	Operation			
4.3	4.3.5, 6.8.4	9.1.1.2	1.1.3.6	7.2.4	7.3.3	7.5.11	8.5	5.3.2.3		3.1.2
(12)	(13)	(14)	(15)	(16)	(17)	(18)	(19)	(20)	(1)	(2)
CxBN(M)		AT	3			CV9 CV10 CV36		20	1006	ARGON, COMPRESSED
PxBH(M)		AT	1			CV9 CV10 CV36	S7 S17	268	1008	BORON TRIFLUORIDE
PxBN(M)		AT	3			CV9 CV10 CV36		20	1009	BROMOTRIFLUORO-METHANE (REFRIGERANT GAS R 13B1)
PxBN(M)		FL	2			CV9 CV10 CV36	S2 S20	239	1010	BUTADIENES, STABILIZED or BUTADIENES AND HYDROCARBON MIXTURE, STABILIZED, having a vapour pressure at 70 °C not exceeding 1.1 Mpa (11 bar) and a density at 50 °C not lower than 0.525 kg/l
PxBN(M)		FL	2			CV9 CV10 CV36	S2 S20	23	1011	BUTANE
PxBN(M)		FL	2			CV9 CV10 CV36	S2 S20	23	1012	BUTYLENES MIXTURE or 1-BUTYLENE or CIS-2-BUTYLENE or TRANS-2-BUTYLENE
PxBN(M)		AT	3			CV9 CV10 CV36		20	1013	CARBON DIOXIDE
CxBN(M)		AT	3			CV9 CV10 CV36		25	1014	CARBON DIOXIDE AND OXYGEN MIXTURE, COMPRESSED
PxBN(M)		AT	3			CV9 CV10 CV36		20	1015	CARBON DIOXIDE AND NITROUS OXIDE MIXTURE
CxBH(M)		FL	1			CV9 CV10 CV36	S2 S7 S17	263	1016	CARBON MONOXIDE, COMPRESSED
P22DH(M)		AT	1			CV9 CV10 CV36	S7 S17	268	1017	CHLORINE
PxBN(M)		AT	3			CV9 CV10 CV36		20	1018	CHLORODIFLUORO-METHANE (REFRIGERANT GAS R 22)
PxBN(M)		AT	3			CV9 CV10 CV36		20	1020	CHLOROPENTAFLUORO-ETHANE (REFRIGERANT GAS R 115)
PxBN(M)		AT	3			CV9 CV10 CV36		20	1021	1-CHLORO-1,2,2,2-TETRAFLUOROETHANE (REFRIGERANT GAS R 124)
PxBN(M)		AT	3			CV9 CV10 CV36		20	1022	CHLOROTRIFLUORO-METHANE (REFRIGERANT GAS R 13)
CxBH(M)		FL	1			CV9 CV10 CV36	S2 S7 S17	263	1023	COAL GAS, COMPRESSED
PxBH(M)		FL	1			CV9 CV10 CV36	S2 S7 S17	263	1026	CYANOGEN
PxBN(M)		FL	2			CV9 CV10 CV36	S2 S20	23	1027	CYCLOPROPANE
PxBN(M)		AT	3			CV9 CV10 CV36		20	1028	DICHLORODIFLUORO-METHANE (REFRIGERANT GAS R 12)

UN No.	Name and description	Class	Classification code	Packing group	Labels	Special provisions	Limited quantities	Packaging			Portable tanks and bulk containers	
								Packing instructions	Special packing provisions	Mixed packing provisions	Instructions	Special provisions
	3.1.2	2.2	2.2	2.1.1.3	5.2.2	3.3	3.4.6	4.1.4	4.1.4	4.1.10	4.2.5.2 7.3.2	4.2.5.3
(1)	(2)	(3a)	(3b)	(4)	(5)	(6)	(7)	(8)	(9a)	(9b)	(10)	(11)
1029	DICHLOROFLUORO-METHANE (REFRIGERANT GAS R 21)	2	2A		2.2		LQ1	P200		MP9	(M) T50	
1030	1,1-DIFLUOROETHANE (REFRIGERANT GAS R 152a)	2	2F		2.1		LQ0	P200		MP9	(M) T50	
1032	DIMETHYLAMINE, ANHYDROUS	2	2F		2.1		LQ0	P200		MP9	(M) T50	
1033	DIMETHYL ETHER	2	2F		2.1		LQ0	P200		MP9	(M) T50	
1035	ETHANE	2	2F		2.1		LQ0	P200		MP9	(M)	
1036	ETHYLAMINE	2	2F		2.1		LQ0	P200		MP9	(M) T50	
1037	ETHYL CHLORIDE	2	2F		2.1		LQ0	P200		MP9	(M) T50	
1038	ETHYLENE, REFRIGERATED LIQUID	2	3F		2.1		LQ0	P203		MP9	T75	TP5
1039	ETHYL METHYL ETHER	2	2F		2.1		LQ0	P200		MP9	(M)	
1040	ETHYLENE OXIDE	2	2TF		2.3 +2.1		LQ0	P200		MP9	(M)	
1040	ETHYLENE OXIDE WITH NITROGEN up to a total pressure of 1 MPa (10 bar) at 50 °C	2	2TF		2.3 +2.1		LQ0	P200		MP9	(M) T50	TP20
1041	ETHYLENE OXIDE AND CARBON DIOXIDE MIXTURE with more than 9% but not more than 87% ethylene oxide	2	2F		2.1		LQ0	P200		MP9	(M) T50	
1043	FERTILIZER AMMONIATING SOLUTION with free ammonia	2	4A		2.2	642						
1044	FIRE EXTINGUISHERS with compressed or liquefied gas	2	6A		2.2	225 594	LQ0	P003		MP9		
1045	FLUORINE, COMPRESSED	2	1TOC		2.3 +5.1 +8		LQ0	P200		MP9		
1046	HELIUM, COMPRESSED	2	1A		2.2		LQ1	P200		MP9	(M)	
1048	HYDROGEN BROMIDE, ANHYDROUS	2	2TC		2.3 +8		LQ0	P200		MP9	(M)	
1049	HYDROGEN, COMPRESSED	2	1F		2.1		LQ0	P200		MP9	(M)	
1050	HYDROGEN CHLORIDE, ANHYDROUS	2	2TC		2.3 +8		LQ0	P200		MP9	(M)	
1051	HYDROGEN CYANIDE, STABILIZED containing less than 3% water	6.1	TF1	I	6.1 +3	603	LQ0	P200		MP2		
1052	HYDROGEN FLUORIDE, ANHYDROUS	8	CT1	I	8 +6.1		LQ0	P200		MP2	T10	TP2

ADR tank		Vehicle for tank carriage	Transport category	Special provisions for carriage				Hazard identifi-cation No.	UN No.	Name and description
Tank code	Special provisions			Packages	Bulk	Loading, unloading and handling	Operation			
4.3	4.3.5, 6.8.4	9.1.1.2	1.1.3.6	7.2.4	7.3.3	7.5.11	8.5	5.3.2.3		3.1.2
(12)	(13)	(14)	(15)	(16)	(17)	(18)	(19)	(20)	(1)	(2)
PxBN(M)		AT	3			CV9 CV10 CV36		20	1029	DICHLOROFLUORO-METHANE (REFRIGERANT GAS R 21)
PxBN(M)		FL	2			CV9 CV10 CV36	S2 S20	23	1030	1,1-DIFLUOROETHANE (REFRIGERANT GAS R 152a)
PxBN(M)		FL	2			CV9 CV10 CV36	S2 S20	23	1032	DIMETHYLAMINE, ANHYDROUS
PxBN(M)		FL	2			CV9 CV10 CV36	S2 S20	23	1033	DIMETHYL ETHER
PxBN(M)		FL	2			CV9 CV10 CV36	S2 S20	23	1035	ETHANE
PxBN(M)		FL	2			CV9 CV10 CV36	S2 S20	23	1036	ETHYLAMINE
PxBN(M)		FL	2			CV9 CV10 CV36	S2 S20	23	1037	ETHYL CHLORIDE
RxBN	TU18	FL	2	V5		CV9 CV11 CV36	S2 S17	223	1038	ETHYLENE, REFRIGERATED LIQUID
PxBN(M)		FL	2			CV9 CV10 CV36	S2 S20	23	1039	ETHYL METHYL ETHER
			1			CV9 CV10 CV36	S2 S7 S17		1040	ETHYLENE OXIDE
PxBH(M)		FL	1			CV9 CV10 CV36	S2 S7 S17	263	1040	ETHYLENE OXIDE WITH NITROGEN up to a total pressure of 1 MPa (10 bar) at 50 °C
PxBN(M)		FL	2			CV9 CV10 CV36	S2 S20	239	1041	ETHYLENE OXIDE AND CARBON DIOXIDE MIXTURE with more than 9% but not more than 87% ethylene oxide
									1043	FERTILIZER AMMONIATING SOLUTION with free ammonia
			3			CV9			1044	FIRE EXTINGUISHERS with compressed or liquefied gas
			1			CV9 CV10 CV36	S7 S17		1045	FLUORINE, COMPRESSED
CxBN(M)		AT	3			CV9 CV10 CV36		20	1046	HELIUM, COMPRESSED
PxBH(M)		AT	1			CV9 CV10 CV36	S7 S17	268	1048	HYDROGEN BROMIDE, ANHYDROUS
CxBN(M)		FL	2			CV9 CV10 CV36	S2	23	1049	HYDROGEN, COMPRESSED
PxBH(M)		AT	1			CV9 CV10 CV36	S7 S17	268	1050	HYDROGEN CHLORIDE, ANHYDROUS
			0			CV1 CV13 CV28	S2 S9 S10 S17		1051	HYDROGEN CYANIDE, STABILIZED containing less than 3% water
L21DH(+)	TU14 TU34 TC1 TE21 TM3 TM5	AT	1			CV13 CV28 CV34	S17	886	1052	HYDROGEN FLUORIDE, ANHYDROUS

UN No.	Name and description	Class	Classification code	Packing group	Labels	Special provisions	Limited quantities	Packaging			Portable tanks and bulk containers	
								Packing instructions	Special packing provisions	Mixed packing provisions	Instructions	Special provisions
	3.1.2	2.2	2.2	2.1.1.3	5.2.2	3.3	3.4.6	4.1.4	4.1.4	4.1.10	4.2.5.2 7.3.2	4.2.5.3
(1)	(2)	(3a)	(3b)	(4)	(5)	(6)	(7)	(8)	(9a)	(9b)	(10)	(11)
1053	HYDROGEN SULPHIDE	2	2TF		2.3 +2.1		LQ0	P200		MP9	(M)	
1055	ISOBUTYLENE	2	2F		2.1		LQ0	P200		MP9	(M) T50	
1056	KRYPTON, COMPRESSED	2	1A		2.2		LQ1	P200		MP9	(M)	
1057	LIGHTERS or LIGHTER REFILLS containing flammable gas	2	6F		2.1	201	LQ0	P002	PP84 RR5	MP9		
1058	LIQUEFIED GASES, non-flammable, charged with nitrogen, carbon dioxide or air	2	2A		2.2		LQ1	P200		MP9	(M)	
1060	METHYLACETYLENE AND PROPADIENE MIXTURE, STABILIZED such as mixture P1 or mixture P2	2	2F		2.1	581	LQ0	P200		MP9	(M) T50	
1061	METHYLAMINE, ANHYDROUS	2	2F		2.1		LQ0	P200		MP9	(M) T50	
1062	METHYL BROMIDE with not more than 2% chloropicrin	2	2T		2.3	23	LQ0	P200		MP9	(M) T50	
1063	METHYL CHLORIDE (REFRIGERANT GAS R 40)	2	2F		2.1		LQ0	P200		MP9	(M) T50	
1064	METHYL MERCAPTAN	2	2TF		2.3 +2.1		LQ0	P200		MP9	(M) T50	
1065	NEON, COMPRESSED	2	1A		2.2		LQ1	P200		MP9	(M)	
1066	NITROGEN, COMPRESSED	2	1A		2.2		LQ1	P200		MP9	(M)	
1067	DINITROGEN TETROXIDE (NITROGEN DIOXIDE)	2	2TOC		2.3 +5.1 +8		LQ0	P200		MP9	T50	TP21
1069	NITROSYL CHLORIDE	2	2TC		2.3 +8		LQ0	P200		MP9		
1070	NITROUS OXIDE	2	2O		2.2 +5.1	584	LQ0	P200		MP9	(M)	
1071	OIL GAS, COMPRESSED	2	1TF		2.3 +2.1		LQ0	P200		MP9	(M)	
1072	OXYGEN, COMPRESSED	2	1O		2.2 +5.1		LQ0	P200		MP9	(M)	
1073	OXYGEN, REFRIGERATED LIQUID	2	3O		2.2 +5.1		LQ0	P203		MP9	T75	TP5 TP22
1075	PETROLEUM GASES, LIQUEFIED	2	2F		2.1	274 583 639	LQ0	P200		MP9	(M) T50	
1076	PHOSGENE	2	2TC		2.3 +8		LQ0	P200		MP9		
1077	PROPYLENE	2	2F		2.1		LQ0	P200		MP9	(M) T50	

ADR tank		Vehicle for tank carriage	Transport category	Special provisions for carriage				Hazard identifi-cation No.	UN No.	Name and description
Tank code	Special provisions			Packages	Bulk	Loading, unloading and handling	Operation			
4.3	4.3.5, 6.8.4	9.1.1.2	1.1.3.6	7.2.4	7.3.3	7.5.11	8.5	5.3.2.3		3.1.2
(12)	(13)	(14)	(15)	(16)	(17)	(18)	(19)	(20)	(1)	(2)
PxDH(M)		FL	1			CV9 CV10 CV36	S2 S7 S17	263	1053	HYDROGEN SULPHIDE
PxBN(M)		FL	2			CV9 CV10 CV36	S2 S20	23	1055	ISOBUTYLENE
CxBN(M)		AT	3			CV9 CV10 CV36		20	1056	KRYPTON, COMPRESSED
			2			CV9	S2		1057	LIGHTERS or LIGHTER REFILLS containing flammable gas
PxBN(M)		AT	3			CV9 CV10 CV36		20	1058	LIQUEFIED GASES, non-flammable, charged with nitrogen, carbon dioxide or air
PxBN(M)		FL	2			CV9 CV10 CV36	S2 S20	239	1060	METHYLACETYLENE AND PROPADIENE MIXTURE, STABILIZED such as mixture P1 or mixture P2
PxBN(M)		FL	2			CV9 CV10 CV36	S2 S20	23	1061	METHYLAMINE, ANHYDROUS
PxBH(M)		AT	1			CV9 CV10 CV36	S7 S17	26	1062	METHYL BROMIDE with not more than 2% chloropicrin
PxBN(M)		FL	2			CV9 CV10 CV36	S2 S20	23	1063	METHYL CHLORIDE (REFRIGERANT GAS R 40)
PxDH(M)		FL	1			CV9 CV10 CV36	S2 S7 S17	263	1064	METHYL MERCAPTAN
CxBN(M)		AT	3			CV9 CV10 CV36		20	1065	NEON, COMPRESSED
CxBN(M)		AT	3			CV9 CV10 CV36		20	1066	NITROGEN, COMPRESSED
PxBH(M)	TU17	AT	1			CV9 CV10 CV36	S7 S17	265	1067	DINITROGEN TETROXIDE (NITROGEN DIOXIDE)
			1			CV9 CV10 CV36	S7 S17		1069	NITROSYL CHLORIDE
PxBN(M)		AT	3			CV9 CV10 CV36		25	1070	NITROUS OXIDE
CxBH(M)		FL	1			CV9 CV10 CV36	S2 S7 S17	263	1071	OIL GAS, COMPRESSED
CxBN(M)		AT	3			CV9 CV10 CV36		25	1072	OXYGEN, COMPRESSED
RxBN	TU7 TU19	AT	3	V5		CV9 CV11 CV36	S20	225	1073	OXYGEN, REFRIGERATED LIQUID
PxBN(M)		FL	2			CV9 CV10 CV36	S2 S20	23	1075	PETROLEUM GASES, LIQUEFIED
P22DH(M)	TU17	AT	1			CV9 CV10 CV36	S7 S17	268	1076	PHOSGENE
PxBN(M)		FL	2			CV9 CV10 CV36	S2 S20	23	1077	PROPYLENE

UN No.	Name and description	Class	Classification code	Packing group	Labels	Special provisions	Limited quantities	Packaging			Portable tanks and bulk containers	
								Packing instructions	Special packing provisions	Mixed packing provisions	Instructions	Special provisions
	3.1.2	2.2	2.2	2.1.1.3	5.2.2	3.3	3.4.6	4.1.4	4.1.4	4.1.10	4.2.5.2 7.3.2	4.2.5.3
(1)	(2)	(3a)	(3b)	(4)	(5)	(6)	(7)	(8)	(9a)	(9b)	(10)	(11)
1078	REFRIGERANT GAS, N.O.S., such as mixture F1, mixture F2 or mixture F3	2	2A		2.2	274 582	LQ1	P200		MP9	(M) T50	
1079	SULPHUR DIOXIDE	2	2TC		2.3 +8		LQ0	P200		MP9	(M) T50	TP19
1080	SULPHUR HEXAFLUORIDE	2	2A		2.2		LQ1	P200		MP9	(M)	
1081	TETRAFLUOROETHYLENE, STABILIZED	2	2F		2.1		LQ0	P200		MP9	(M)	
1082	TRIFLUOROCHLORO-ETHYLENE, STABILIZED	2	2TF		2.3 +2.1		LQ0	P200		MP9	(M) T50	
1083	TRIMETHYLAMINE, ANHYDROUS	2	2F		2.1		LQ0	P200		MP9	(M) T50	
1085	VINYL BROMIDE, STABILIZED	2	2F		2.1		LQ0	P200		MP9	(M) T50	
1086	VINYL CHLORIDE, STABILIZED	2	2F		2.1		LQ0	P200		MP9	(M) T50	
1087	VINYL METHYL ETHER, STABILIZED	2	2F		2.1		LQ0	P200		MP9	(M) T50	
1088	ACETAL	3	F1	II	3		LQ4	P001 IBC02 R001		MP19	T4	TP1
1089	ACETALDEHYDE	3	F1	I	3		LQ3	P001		MP7 MP17	T11	TP2 TP7
1090	ACETONE	3	F1	II	3		LQ4	P001 IBC02 R001		MP19	T4	TP1
1091	ACETONE OILS	3	F1	II	3		LQ4	P001 IBC02 R001		MP19	T4	TP1 TP8
1092	ACROLEIN, STABILIZED	6.1	TF1	I	6.1 +3		LQ0	P601 PR3		MP8 MP17	T14	TP2 TP7
1093	ACRYLONITRILE, STABILIZED	3	FT1	I	3 +6.1		LQ0	P001		MP7 MP17	T14	TP2
1098	ALLYL ALCOHOL	6.1	TF1	I	6.1 +3		LQ0	P602		MP8 MP17	T14	TP2
1099	ALLYL BROMIDE	3	FT1	I	3 +6.1		LQ0	P001		MP7 MP17	T14	TP2
1100	ALLYL CHLORIDE	3	FT1	I	3 +6.1		LQ0	P001		MP7 MP17	T14	TP2
1104	AMYL ACETATES	3	F1	III	3		LQ7	P001 IBC03 LP01 R001		MP19	T2	TP1
1105	PENTANOLS	3	F1	II	3		LQ4	P001 IBC02 R001		MP19	T4	TP1 TP29
1105	PENTANOLS	3	F1	III	3		LQ7	P001 IBC03 LP01 R001		MP19	T2	TP1
1106	AMYLAMINE	3	FC	II	3 +8		LQ4	P001 IBC02		MP19	T7	TP1
1106	AMYLAMINE	3	FC	III	3 +8		LQ7	P001 IBC03 R001		MP19	T4	TP1

ADR tank		Vehicle for tank carriage	Transport category	Special provisions for carriage				Hazard identifi-cation No.	UN No.	Name and description
Tank code	Special provisions			Packages	Bulk	Loading, unloading and handling	Operation			
4.3	4.3.5, 6.8.4	9.1.1.2	1.1.3.6	7.2.4	7.3.3	7.5.11	8.5	5.3.2.3		3.1.2
(12)	(13)	(14)	(15)	(16)	(17)	(18)	(19)	(20)	(1)	(2)
PxBN(M)		AT	3			CV9 CV10 CV36		20	1078	REFRIGERANT GAS, N.O.S., such as mixture F1, mixture F2 or mixture F3
PxDH(M)		AT	1			CV9 CV10 CV36	S7 S17	268	1079	SULPHUR DIOXIDE
PxBN(M)		AT	3			CV9 CV10 CV36		20	1080	SULPHUR HEXAFLUORIDE
		FL	2			CV9 CV10 CV36	S2 S20	239	1081	TETRAFLUOROETHYLENE, STABILIZED
PxBH(M)		FL	1			CV9 CV10 CV36	S2 S7 S17	263	1082	TRIFLUOROCHLORO-ETHYLENE, STABILIZED
PxBN(M)		FL	2			CV9 CV10 CV36	S2 S20	23	1083	TRIMETHYLAMINE, ANHYDROUS
PxBN(M)		FL	2			CV9 CV10 CV36	S2 S20	239	1085	VINYL BROMIDE, STABILIZED
PxBN(M)		FL	2			CV9 CV10 CV36	S2 S20	239	1086	VINYL CHLORIDE, STABILIZED
PxBN(M)		FL	2			CV9 CV10 CV36	S2 S20	239	1087	VINYL METHYL ETHER, STABILIZED
LGBF		FL	2				S2 S20	33	1088	ACETAL
L4BN	TU8	FL	1				S2 S20	33	1089	ACETALDEHYDE
LGBF		FL	2				S2 S20	33	1090	ACETONE
LGBF		FL	2				S2 S20	33	1091	ACETONE OILS
L10CH	TU14 TU15 TE19 TE21	FL	1			CV1 CV13 CV28	S2 S9 S17	663	1092	ACROLEIN, STABILIZED
L10CH	TU14 TU15 TE21	FL	1			CV13 CV28	S2 S19	336	1093	ACRYLONITRILE, STABILIZED
L10CH	TU14 TU15 TE19 TE21	FL	1			CV1 CV13 CV28	S2 S9 S17	663	1098	ALLYL ALCOHOL
L10CH	TU14 TU15 TE21	FL	1			CV13 CV28	S2 S19	336	1099	ALLYL BROMIDE
L10CH	TU14 TU15 TE21	FL	1			CV13 CV28	S2 S19	336	1100	ALLYL CHLORIDE
LGBF		FL	3				S2	30	1104	AMYL ACETATES
LGBF		FL	2				S2 S20	33	1105	PENTANOLS
LGBF		FL	3				S2	30	1105	PENTANOLS
L4BH	TE15	FL	2				S2 S20	338	1106	AMYLAMINE
L4BN		FL	3				S2	38	1106	AMYLAMINE

UN No.	Name and description	Class	Classifi-cation code	Packing group	Labels	Special provi-sions	Limited quantities	Packaging			Portable tanks and bulk containers	
								Packing instruc-tions	Special packing provisions	Mixed packing provisions	Instruc-tions	Special provisions
	3.1.2	2.2	2.2	2.1.1.3	5.2.2	3.3	3.4.6	4.1.4	4.1.4	4.1.10	4.2.5.2 7.3.2	4.2.5.3
(1)	(2)	(3a)	(3b)	(4)	(5)	(6)	(7)	(8)	(9a)	(9b)	(10)	(11)
1107	AMYL CHLORIDE	3	F1	II	3		LQ4	P001 IBC02 R001		MP19	T4	TP1
1108	1-PENTENE (n-AMYLENE)	3	F1	I	3		LQ3	P001		MP7 MP17	T11	TP2
1109	AMYL FORMATES	3	F1	III	3		LQ7	P001 IBC03 LP01 R001		MP19	T2	TP1
1110	n-AMYL METHYL KETONE	3	F1	III	3		LQ7	P001 IBC03 LP01 R001		MP19	T2	TP1
1111	AMYL MERCAPTAN	3	F1	II	3		LQ4	P001 IBC02 R001		MP19	T4	TP1
1112	AMYL NITRATE	3	F1	III	3		LQ7	P001 IBC03 LP01 R001		MP19	T2	TP1
1113	AMYL NITRITE	3	F1	II	3		LQ4	P001 IBC02 R001		MP19	T4	TP1
1114	BENZENE	3	F1	II	3		LQ4	P001 IBC02 R001		MP19	T4	TP1
1120	BUTANOLS	3	F1	II	3		LQ4	P001 IBC02 R001		MP19	T4	TP1 TP29
1120	BUTANOLS	3	F1	III	3		LQ7	P001 IBC03 LP01 R001		MP19	T2	TP1
1123	BUTYL ACETATES	3	F1	II	3		LQ4	P001 IBC02 R001		MP19	T4	TP1
1123	BUTYL ACETATES	3	F1	III	3		LQ7	P001 IBC03 LP01 R001		MP19	T2	TP1
1125	n-BUTYLAMINE	3	FC	II	3 +8		LQ4	P001 IBC02		MP19	T7	TP1
1126	1-BROMOBUTANE	3	F1	II	3		LQ4	P001 IBC02 R001		MP19	T4	TP1
1127	CHLOROBUTANES	3	F1	II	3		LQ4	P001 IBC02 R001		MP19	T4	TP1
1128	n-BUTYL FORMATE	3	F1	II	3		LQ4	P001 IBC02 R001		MP19	T4	TP1
1129	BUTYRALDEHYDE	3	F1	II	3		LQ4	P001 IBC02 R001		MP19	T4	TP1
1130	CAMPHOR OIL	3	F1	III	3		LQ7	P001 IBC03 LP01 R001		MP19	T2	TP1
1131	CARBON DISULPHIDE	3	FT1	I	3 +6.1		LQ0	P001	PP31	MP7 MP17	T14	TP2 TP7
1133	ADHESIVES containing flammable liquid (vapour pressure at 50 °C more than 175 kPa)	3	F1	I	3	640A	LQ3	P001		MP7 MP17	T11	TP1 TP8 TP27

ADR tank		Vehicle for tank carriage	Transport category	Special provisions for carriage				Hazard identifi-cation No.	UN No.	Name and description
Tank code	Special provisions			Packages	Bulk	Loading, unloading and handling	Operation			
4.3	4.3.5, 6.8.4	9.1.1.2	1.1.3.6	7.2.4	7.3.3	7.5.11	8.5	5.3.2.3		3.1.2
(12)	(13)	(14)	(15)	(16)	(17)	(18)	(19)	(20)	(1)	(2)
LGBF		FL	2				S2 S20	33	1107	AMYL CHLORIDE
L4BN		FL	1				S2 S20	33	1108	1-PENTENE (n-AMYLENE)
LGBF		FL	3				S2	30	1109	AMYL FORMATES
LGBF		FL	3				S2	30	1110	n-AMYL METHYL KETONE
LGBF		FL	2				S2 S20	33	1111	AMYL MERCAPTAN
LGBF		FL	3				S2	30	1112	AMYL NITRATE
LGBF		FL	2				S2 S20	33	1113	AMYL NITRITE
LGBF		FL	2				S2 S20	33	1114	BENZENE
LGBF		FL	2				S2 S20	33	1120	BUTANOLS
LGBF		FL	3				S2	30	1120	BUTANOLS
LGBF		FL	2				S2 S20	33	1123	BUTYL ACETATES
LGBF		FL	3				S2	30	1123	BUTYL ACETATES
L4BH	TE15	FL	2				S2 S20	338	1125	n-BUTYLAMINE
LGBF		FL	2				S2 S20	33	1126	1-BROMOBUTANE
LGBF		FL	2				S2 S20	33	1127	CHLOROBUTANES
LGBF		FL	2				S2 S20	33	1128	n-BUTYL FORMATE
LGBF		FL	2				S2 S20	33	1129	BUTYRALDEHYDE
LGBF		FL	3				S2	30	1130	CAMPHOR OIL
L10CH	TU14 TU15 TE21	FL	1			CV13 CV28	S2 S19	336	1131	CARBON DISULPHIDE
L4BN		FL	1				S2 S20	33	1133	ADHESIVES containing flammable liquid (vapour pressure at 50 °C more than 175 kPa)

UN No.	Name and description	Class	Classification code	Packing group	Labels	Special provisions	Limited quantities	Packaging			Portable tanks and bulk containers	
								Packing instructions	Special packing provisions	Mixed packing provisions	Instructions	Special provisions
	3.1.2	2.2	2.2	2.1.1.3	5.2.2	3.3	3.4.6	4.1.4	4.1.4	4.1.10	4.2.5.2 7.3.2	4.2.5.3
(1)	(2)	(3a)	(3b)	(4)	(5)	(6)	(7)	(8)	(9a)	(9b)	(10)	(11)
1133	ADHESIVES containing flammable liquid (vapour pressure at 50 °C more than 110 kPa but not more than 175 kPa)	3	F1	I	3	640B	LQ3	P001		MP7 MP17	T11	TP1 TP8 TP27
1133	ADHESIVES containing flammable liquid (vapour pressure at 50 °C more than 110 kPa but not more than 175 kPa)	3	F1	II	3	640C	LQ6	P001	PP1	MP19	T4	TP1 TP8
1133	ADHESIVES containing flammable liquid (vapour pressure at 50 °C not more than 110 kPa)	3	F1	II	3	640D	LQ6	P001 IBC02 R001	PP1	MP19	T4	TP1 TP8
1133	ADHESIVES containing flammable liquid	3	F1	III	3	640E	LQ7	P001 IBC03 LP01 R001	PP1	MP19	T2	TP1
1133	ADHESIVES containing flammable liquid (having a flash-point below 23 °C and viscous according to 2.2.3.1.4) (vapour pressure at 50 °C more than 175 kPa)	3	F1	III	3	640F	LQ7	P001 LP01 R001	PP1	MP19	T2	TP1
1133	ADHESIVES containing flammable liquid (having a flash-point below 23 °C and viscous according to 2.2.3.1.4) (vapour pressure at 50 °C more than 110 kPa but not more than 175 kPa)	3	F1	III	3	640G	LQ7	P001 LP01 R001	PP1	MP19	T2	TP1
1133	ADHESIVES containing flammable liquid (having a flash-point below 23 °C and viscous according to 2.2.3.1.4) (vapour pressure at 50 °C not more than 110 kPa)	3	F1	III	3	640H	LQ7	P001 IBC02 LP01 R001	PP1	MP19	T2	TP1
1134	CHLOROBENZENE	3	F1	III	3		LQ7	P001 IBC03 LP01 R001		MP19	T2	TP1
1135	ETHYLENE CHLOROHYDRIN	6.1	TF1	I	6.1 +3		LQ0	P001		MP8 MP17	T14	TP2
1136	COAL TAR DISTILLATES, FLAMMABLE	3	F1	II	3		LQ4	P001 IBC02 R001		MP19	T4	TP1
1136	COAL TAR DISTILLATES, FLAMMABLE	3	F1	III	3		LQ7	P001 IBC03 LP01 R001		MP19	T4	TP1 TP29
1139	COATING SOLUTION (includes surface treatments or coatings used for industrial or other purposes such as vehicle under coating, drum or barrel lining) (vapour pressure at 50 °C more than 175 kPa)	3	F1	I	3	640A	LQ3	P001		MP7 MP17	T11	TP1 TP8 TP27

ADR tank		Vehicle for tank carriage	Transport category	Special provisions for carriage				Hazard identifi-cation No.	UN No.	Name and description
Tank code	Special provisions			Packages	Bulk	Loading, unloading and handling	Operation			
4.3	4.3.5, 6.8.4	9.1.1.2	1.1.3.6	7.2.4	7.3.3	7.5.11	8.5	5.3.2.3		3.1.2
(12)	(13)	(14)	(15)	(16)	(17)	(18)	(19)	(20)	(1)	(2)
L1.5BN		FL	1				S2 S20	33	1133	ADHESIVES containing flammable liquid (vapour pressure at 50 °C more than 110 kPa but not more than 175 kPa)
L1.5BN		FL	2				S2 S20	33	1133	ADHESIVES containing flammable liquid (vapour pressure at 50 °C more than 110 kPa but not more than 175 kPa)
LGBF		FL	2				S2 S20	33	1133	ADHESIVES containing flammable liquid (vapour pressure at 50 °C not more than 110 kPa)
LGBF		FL	3				S2	30	1133	ADHESIVES containing flammable liquid
L4BN		FL	3				S2	33	1133	ADHESIVES containing flammable liquid (having a flash-point below 23 °C and viscous according to 2.2.3.1.4) (vapour pressure at 50 °C more than 175 kPa)
L1.5BN		FL	3				S2	33	1133	ADHESIVES containing flammable liquid (having a flash-point below 23 °C and viscous according to 2.2.3.1.4) (vapour pressure at 50 °C more than 110 kPa but not more than 175 kPa)
LGBF		FL	3				S2	33	1133	ADHESIVES containing flammable liquid (having a flash-point below 23 °C and viscous according to 2.2.3.1.4) (vapour pressure at 50 °C not more than 110 kPa)
LGBF		FL	3				S2	30	1134	CHLOROBENZENE
L10CH	TU14 TU15 TE19 TE21	FL	1			CV1 CV13 CV28	S2 S9 S17	663	1135	ETHYLENE CHLOROHYDRIN
LGBF		FL	2				S2 S20	33	1136	COAL TAR DISTILLATES, FLAMMABLE
LGBF		FL	3				S2	30	1136	COAL TAR DISTILLATES, FLAMMABLE
L4BN		FL	1				S2 S20	33	1139	COATING SOLUTION (includes surface treatments or coatings used for industrial or other purposes such as vehicle under coating, drum or barrel lining) (vapour pressure at 50 °C more than 175 kPa)

UN No.	Name and description	Class	Classifi-cation code	Packing group	Labels	Special provi-sions	Limited quantities	Packaging			Portable tanks and bulk containers	
								Packing instruc-tions	Special packing provisions	Mixed packing provisions	Instruc-tions	Special provisions
	3.1.2	2.2	2.2	2.1.1.3	5.2.2	3.3	3.4.6	4.1.4	4.1.4	4.1.10	4.2.5.2 7.3.2	4.2.5.3
(1)	(2)	(3a)	(3b)	(4)	(5)	(6)	(7)	(8)	(9a)	(9b)	(10)	(11)
1139	COATING SOLUTION (includes surface treatments or coatings used for industrial or other purposes such as vehicle under coating, drum or barrel lining) (vapour pressure at 50 °C more than 110 kPa but not more than 175 kPa)	3	F1	I	3	640B	LQ3	P001		MP7 MP17	T11	TP1 TP8 TP27
1139	COATING SOLUTION (includes surface treatments or coatings used for industrial or other purposes such as vehicle under coating, drum or barrel lining) (vapour pressure at 50 °C more than 110 kPa but not more than 175 kPa)	3	F1	II	3	640C	LQ6	P001		MP19	T4	TP1 TP8
1139	COATING SOLUTION (includes surface treatments or coatings used for industrial or other purposes such as vehicle under coating, drum or barrel lining) (vapour pressure at 50 °C not more than 110 kPa)	3	F1	II	3	640D	LQ6	P001 IBC02 R001		MP19	T4	TP1 TP8
1139	COATING SOLUTION (includes surface treatments or coatings used for industrial or other purposes such as vehicle under coating, drum or barrel lining)	3	F1	III	3	640E	LQ7	P001 IBC03 LP01 R001		MP19	T2	TP1
1139	COATING SOLUTION (includes surface treatments or coatings used for industrial or other purposes such as vehicle under coating, drum or barrel lining) (having a flash-point below 23 °C and viscous according to 2.2.3.1.4) (vapour pressure at 50 °C more than 175 kPa)	3	F1	III	3	640F	LQ7	P001 LP01 R001		MP19	T2	TP1
1139	COATING SOLUTION (includes surface treatments or coatings used for industrial or other purposes such as vehicle under coating, drum or barrel lining) (having a flash-point below 23 °C and viscous according to 2.2.3.1.4) (vapour pressure at 50 °C more than 110 kPa but not more than 175 kPa)	3	F1	III	3	640G	LQ7	P001 LP01 R001		MP19	T2	TP1

ADR tank		Vehicle for tank carriage	Transport category	Special provisions for carriage				Hazard identifi-cation No.	UN No.	Name and description
Tank code	Special provisions			Packages	Bulk	Loading, unloading and handling	Operation			
4.3	4.3.5, 6.8.4	9.1.1.2	1.1.3.6	7.2.4	7.3.3	7.5.11	8.5	5.3.2.3		3.1.2
(12)	(13)	(14)	(15)	(16)	(17)	(18)	(19)	(20)	(1)	(2)
L1.5BN		FL	1				S2 S20	33	1139	COATING SOLUTION (includes surface treatments or coatings used for industrial or other purposes such as vehicle under coating, drum or barrel lining) (vapour pressure at 50 °C more than 110 kPa but not more than 175 kPa)
L1.5BN		FL	2				S2 S20	33	1139	COATING SOLUTION (includes surface treatments or coatings used for industrial or other purposes such as vehicle under coating, drum or barrel lining) (vapour pressure at 50 °C more than 110 kPa but not more than 175 kPa)
LGBF		FL	2				S2 S20	33	1139	COATING SOLUTION (includes surface treatments or coatings used for industrial or other purposes such as vehicle under coating, drum or barrel lining) (vapour pressure at 50 °C not more than 110 kPa)
LGBF		FL	3				S2	30	1139	COATING SOLUTION (includes surface treatments or coatings used for industrial or other purposes such as vehicle under coating, drum or barrel lining)
L4BN		FL	3				S2	33	1139	COATING SOLUTION (includes surface treatments or coatings used for industrial or other purposes such as vehicle under coating, drum or barrel lining) (having a flash-point below 23 °C and viscous according to 2.2.3.1.4) (vapour pressure at 50 °C more than 175 kPa)
L1.5BN		FL	3				S2	33	1139	COATING SOLUTION (includes surface treatments or coatings used for industrial or other purposes such as vehicle under coating, drum or barrel lining) (having a flash-point below 23 °C and viscous according to 2.2.3.1.4) (vapour pressure at 50 °C more than 110 kPa but not more than 175 kPa)

UN No.	Name and description	Class	Classification code	Packing group	Labels	Special provisions	Limited quantities	Packaging			Portable tanks and bulk containers	
								Packing instructions	Special packing provisions	Mixed packing provisions	Instructions	Special provisions
	3.1.2	2.2	2.2	2.1.1.3	5.2.2	3.3	3.4.6	4.1.4	4.1.4	4.1.10	4.2.5.2 7.3.2	4.2.5.3
(1)	(2)	(3a)	(3b)	(4)	(5)	(6)	(7)	(8)	(9a)	(9b)	(10)	(11)
1139	COATING SOLUTION (includes surface treatments or coatings used for industrial or other purposes such as vehicle under coating, drum or barrel lining) (having a flash-point below 23 °C and viscous according to 2.2.3.1.4) (vapour pressure at 50 °C not more than 110 kPa)	3	F1	III	3	640H	LQ7	P001 IBC02 LP01 R001		MP19	T2	TP1
1143	CROTONALDEHYDE, STABILIZED	6.1	TF1	I	6.1 +3		LQ0	P001		MP8 MP17	T14	TP2
1144	CROTONYLENE	3	F1	I	3		LQ3	P001		MP7 MP17	T11	TP2
1145	CYCLOHEXANE	3	F1	II	3		LQ4	P001 IBC02 R001		MP19	T4	TP1
1146	CYCLOPENTANE	3	F1	II	3		LQ4	P001 IBC02 R001		MP19	T7	TP1
1147	DECAHYDRO-NAPHTHALENE	3	F1	III	3		LQ7	P001 IBC03 LP01 R001		MP19	T2	TP1
1148	DIACETONE ALCOHOL	3	F1	II	3		LQ4	P001 IBC02 R001		MP19	T4	TP1
1148	DIACETONE ALCOHOL	3	F1	III	3		LQ7	P001 IBC03 LP01 R001		MP19	T2	TP1
1149	DIBUTYL ETHERS	3	F1	III	3		LQ7	P001 IBC03 LP01 R001		MP19	T2	TP1
1150	1,2-DICHLOROETHYLENE	3	F1	II	3		LQ4	P001 IBC02 R001		MP19	T7	TP2
1152	DICHLOROPENTANES	3	F1	III	3		LQ7	P001 IBC03 LP01 R001		MP19	T2	TP1
1153	ETHYLENE GLYCOL DIETHYL ETHER	3	F1	II	3		LQ4	P001 IBC02 R001		MP19	T4	TP1
1153	ETHYLENE GLYCOL DIETHYL ETHER	3	F1	III	3		LQ7	P001 IBC03 LP01 R001		MP19	T2	TP1
1154	DIETHYLAMINE	3	FC	II	3 +8		LQ4	P001 IBC02		MP19	T7	TP1
1155	DIETHYL ETHER (ETHYL ETHER)	3	F1	I	3		LQ3	P001		MP7 MP17	T11	TP2
1156	DIETHYL KETONE	3	F1	II	3		LQ4	P001 IBC02 R001		MP19	T4	TP1
1157	DIISOBUTYL KETONE	3	F1	III	3		LQ7	P001 IBC03 LP01 R001		MP19	T2	TP1
1158	DIISOPROPYLAMINE	3	FC	II	3 +8		LQ4	P001 IBC02		MP19	T7	TP1

ADR tank		Vehicle for tank carriage	Transport category	Special provisions for carriage				Hazard identification No.	UN No.	Name and description
Tank code	Special provisions			Packages	Bulk	Loading, unloading and handling	Operation			
4.3	4.3.5, 6.8.4	9.1.1.2	1.1.3.6	7.2.4	7.3.3	7.5.11	8.5	5.3.2.3		3.1.2
(12)	(13)	(14)	(15)	(16)	(17)	(18)	(19)	(20)	(1)	(2)
LGBF		FL	3				S2	33	1139	COATING SOLUTION (includes surface treatments or coatings used for industrial or other purposes such as vehicle under coating, drum or barrel lining) (having a flash-point below 23 °C and viscous according to 2.2.3.1.4) (vapour pressure at 50 °C not more than 110 kPa)
L10CH	TU14 TU15 TE19 TE21	FL	1			CV1 CV13 CV28	S2 S9 S17	663	1143	CROTONALDEHYDE, STABILIZED
L4BN		FL	1				S2 S20	339	1144	CROTONYLENE
LGBF		FL	2				S2 S20	33	1145	CYCLOHEXANE
LGBF		FL	2				S2 S20	33	1146	CYCLOPENTANE
LGBF		FL	3				S2	30	1147	DECAHYDRO-NAPHTHALENE
LGBF		FL	2				S2 S20	33	1148	DIACETONE ALCOHOL
LGBF		FL	3				S2	30	1148	DIACETONE ALCOHOL
LGBF		FL	3				S2	30	1149	DIBUTYL ETHERS
LGBF		FL	2				S2 S20	33	1150	1,2-DICHLOROETHYLENE
LGBF		FL	3				S2	30	1152	DICHLOROPENTANES
LGBF		FL	2				S2 S20	33	1153	ETHYLENE GLYCOL DIETHYL ETHER
LGBF		FL	3				S2	30	1153	ETHYLENE GLYCOL DIETHYL ETHER
L4BH	TE15	FL	2				S2 S20	338	1154	DIETHYLAMINE
L1.5BN		FL	1				S2 S20	33	1155	DIETHYL ETHER (ETHYL ETHER)
LGBF		FL	2				S2 S20	33	1156	DIETHYL KETONE
LGBF		FL	3				S2	30	1157	DIISOBUTYL KETONE
L4BH	TE15	FL	2				S2 S20	338	1158	DIISOPROPYLAMINE

UN No.	Name and description	Class	Classification code	Packing group	Labels	Special provisions	Limited quantities	Packaging			Portable tanks and bulk containers	
								Packing instructions	Special packing provisions	Mixed packing provisions	Instructions	Special provisions
	3.1.2	2.2	2.2	2.1.1.3	5.2.2	3.3	3.4.6	4.1.4	4.1.4	4.1.10	4.2.5.2 7.3.2	4.2.5.3
(1)	(2)	(3a)	(3b)	(4)	(5)	(6)	(7)	(8)	(9a)	(9b)	(10)	(11)
1159	DIISOPROPYL ETHER	3	F1	II	3		LQ4	P001 IBC02 R001		MP19	T4	TP1
1160	DIMETHYLAMINE AQUEOUS SOLUTION	3	FC	II	3 +8		LQ4	P001 IBC02		MP19	T7	TP1
1161	DIMETHYL CARBONATE	3	F1	II	3		LQ4	P001 IBC02 R001		MP19	T4	TP1
1162	DIMETHYLDICHLORO-SILANE	3	FC	II	3 +8		LQ4	P001 IBC02		MP19	T7	TP2
1163	DIMETHYLHYDRAZINE, UNSYMMETRICAL	6.1	TFC	I	6.1 +3 +8		LQ0	P602		MP8 MP17	T14	TP2
1164	DIMETHYL SULPHIDE	3	F1	II	3		LQ4	P001 IBC02	B8	MP19	T7	TP2
1165	DIOXANE	3	F1	II	3		LQ4	P001 IBC02 R001		MP19	T4	TP1
1166	DIOXOLANE	3	F1	II	3		LQ4	P001 IBC02 R001		MP19	T4	TP1
1167	DIVINYL ETHER, STABILIZED	3	F1	I	3		LQ3	P001		MP7 MP17	T11	TP2
1169	EXTRACTS, AROMATIC, LIQUID (vapour pressure at 50 °C more than 175 kPa)	3	F1	I	3	640A	LQ3	P001		MP7 MP17		
1169	EXTRACTS, AROMATIC, LIQUID (vapour pressure at 50 °C more than 110 kPa but not more than 175 kPa)	3	F1	I	3	640B	LQ3	P001		MP7 MP17		
1169	EXTRACTS, AROMATIC, LIQUID (vapour pressure at 50 °C more than 110 kPa but not more than 175 kPa)	3	F1	II	3	640C	LQ6	P001		MP19	T4	TP1 TP8
1169	EXTRACTS, AROMATIC, LIQUID (vapour pressure at 50 °C not more than 110 kPa)	3	F1	II	3	640D	LQ6	P001 IBC02 R001		MP19	T4	TP1 TP8
1169	EXTRACTS, AROMATIC, LIQUID	3	F1	III	3	640E	LQ7	P001 IBC03 LP01 R001		MP19	T2	TP1
1169	EXTRACTS, AROMATIC, LIQUID (having a flash-point below 23 °C and viscous according to 2.2.3.1.4) (vapour pressure at 50 °C more than 175 kPa)	3	F1	III	3	640F	LQ7	P001 LP01 R001		MP19	T2	TP1
1169	EXTRACTS, AROMATIC, LIQUID (having a flash-point below 23 °C and viscous according to 2.2.3.1.4) (vapour pressure at 50 °C more than 110 kPa but not more than 175 kPa)	3	F1	III	3	640G	LQ7	P001 LP01 R001		MP19	T2	TP1

ADR tank		Vehicle for tank carriage	Transport category	Special provisions for carriage				Hazard identifi-cation No.	UN No.	Name and description
Tank code	Special provisions			Packages	Bulk	Loading, unloading and handling	Operation			
4.3	4.3.5, 6.8.4	9.1.1.2	1.1.3.6	7.2.4	7.3.3	7.5.11	8.5	5.3.2.3		3.1.2
(12)	(13)	(14)	(15)	(16)	(17)	(18)	(19)	(20)	(1)	(2)
LGBF		FL	2				S2 S20	33	1159	DIISOPROPYL ETHER
L4BH	TE15	FL	2				S2 S20	338	1160	DIMETHYLAMINE AQUEOUS SOLUTION
LGBF		FL	2				S2 S20	33	1161	DIMETHYL CARBONATE
L4BH	TE15	FL	2				S2 S20	X338	1162	DIMETHYLDICHLORO-SILANE
L10CH	TU14 TU15 TE19 TE21	FL	1			CV1 CV13 CV28	S2 S9 S17	663	1163	DIMETHYLHYDRAZINE, UNSYMMETRICAL
L1.5BN		FL	2				S2 S20	33	1164	DIMETHYL SULPHIDE
LGBF		FL	2				S2 S20	33	1165	DIOXANE
LGBF		FL	2				S2 S20	33	1166	DIOXOLANE
L1.5BN		FL	1				S2 S20	339	1167	DIVINYL ETHER, STABILIZED
L4BN		FL	1				S2 S20	33	1169	EXTRACTS, AROMATIC, LIQUID (vapour pressure at 50 °C more than 175 kPa)
L1.5BN		FL	1				S2 S20	33	1169	EXTRACTS, AROMATIC, LIQUID (vapour pressure at 50 °C more than 110 kPa but not more than 175 kPa)
L1.5BN		FL	2				S2 S20	33	1169	EXTRACTS, AROMATIC, LIQUID (vapour pressure at 50 °C more than 110 kPa but not more than 175 kPa)
LGBF		FL	2				S2 S20	33	1169	EXTRACTS, AROMATIC, LIQUID (vapour pressure at 50 °C not more than 110 kPa)
LGBF		FL	3				S2	30	1169	EXTRACTS, AROMATIC, LIQUID
L4BN		FL	3				S2	33	1169	EXTRACTS, AROMATIC, LIQUID (having a flash-point below 23 °C and viscous according to 2.2.3.1.4) (vapour pressure at 50 °C more than 175 kPa)
L1.5BN		FL	3				S2	33	1169	EXTRACTS, AROMATIC, LIQUID (having a flash-point below 23 °C and viscous according to 2.2.3.1.4) (vapour pressure at 50 °C more than 110 kPa but not more than 175 kPa)

UN No.	Name and description	Class	Classification code	Packing group	Labels	Special provisions	Limited quantities	Packaging			Portable tanks and bulk containers	
								Packing instructions	Special packing provisions	Mixed packing provisions	Instructions	Special provisions
	3.1.2	2.2	2.2	2.1.1.3	5.2.2	3.3	3.4.6	4.1.4	4.1.4	4.1.10	4.2.5.2 7.3.2	4.2.5.3
(1)	(2)	(3a)	(3b)	(4)	(5)	(6)	(7)	(8)	(9a)	(9b)	(10)	(11)
1169	EXTRACTS, AROMATIC, LIQUID (having a flash-point below 23 °C and viscous according to 2.2.3.1.4) (vapour pressure at 50 °C not more than 110 kPa)	3	F1	III	3	640H	LQ7	P001 IBC02 LP01 R001		MP19	T2	TP1
1170	ETHANOL (ETHYL ALCOHOL) or ETHANOL SOLUTION (ETHYL ALCOHOL SOLUTION)	3	F1	II	3	144	LQ4	P001 IBC02 R001	PP2	MP19	T4	TP1
1170	ETHANOL SOLUTION (ETHYL ALCOHOL SOLUTION)	3	F1	III	3	144	LQ7	P001 IBC03 LP01 R001	PP2	MP19	T2	TP1
1171	ETHYLENE GLYCOL MONOETHYL ETHER	3	F1	III	3		LQ7	P001 IBC03 LP01 R001		MP19	T2	TP1
1172	ETHYLENE GLYCOL MONOETHYL ETHER ACETATE	3	F1	III	3		LQ7	P001 IBC03 LP01 R001		MP19	T2	TP1
1173	ETHYL ACETATE	3	F1	II	3		LQ4	P001 IBC02 R001		MP19	T4	TP1
1175	ETHYLBENZENE	3	F1	II	3		LQ4	P001 IBC02 R001		MP19	T4	TP1
1176	ETHYL BORATE	3	F1	II	3		LQ4	P001 IBC02 R001		MP19	T4	TP1
1177	2-ETHYLBUTYL ACETATE	3	F1	III	3		LQ7	P001 IBC03 LP01 R001		MP19	T2	TP1
1178	2-ETHYL-BUTYRALDEHYDE	3	F1	II	3		LQ4	P001 IBC02 R001		MP19	T4	TP1
1179	ETHYL BUTYL ETHER	3	F1	II	3		LQ4	P001 IBC02 R001		MP19	T4	TP1
1180	ETHYL BUTYRATE	3	F1	III	3		LQ7	P001 IBC03 LP01 R001		MP19	T2	TP1
1181	ETHYL CHLOROACETATE	6.1	TF1	II	6.1 +3		LQ17	P001 IBC02		MP15	T7	TP2
1182	ETHYL CHLOROFORMATE	6.1	TFC	I	6.1 +3 +8		LQ0	P602		MP8 MP17	T14	TP2
1183	ETHYLDICHLOROSILANE	4.3	WFC	I	4.3 +3 +8		LQ0	P401 PR2		MP2	T10	TP2 TP7
1184	ETHYLENE DICHLORIDE	3	FT1	II	3 +6.1		LQ0	P001 IBC02		MP19	T7	TP1
1185	ETHYLENEIMINE, STABILIZED	6.1	TF1	I	6.1 +3		LQ0	P601 PR4		MP2		
1188	ETHYLENE GLYCOL MONOMETHYL ETHER	3	F1	III	3		LQ7	P001 IBC03 LP01 R001		MP19	T2	TP1
1189	ETHYLENE GLYCOL MONOMETHYL ETHER ACETATE	3	F1	III	3		LQ7	P001 IBC03 LP01 R001		MP19	T2	TP1

ADR tank		Vehicle for tank carriage	Transport category	Special provisions for carriage				Hazard identifi-cation No.	UN No.	Name and description
Tank code	Special provisions			Packages	Bulk	Loading, unloading and handling	Operation			
4.3	4.3.5, 6.8.4	9.1.1.2	1.1.3.6	7.2.4	7.3.3	7.5.11	8.5	5.3.2.3		3.1.2
(12)	(13)	(14)	(15)	(16)	(17)	(18)	(19)	(20)	(1)	(2)
LGBF		FL	3				S2	33	1169	EXTRACTS, AROMATIC, LIQUID (having a flash-point below 23 °C and viscous according to 2.2.3.1.4) (vapour pressure at 50 °C not more than 110 kPa)
LGBF		FL	2				S2 S20	33	1170	ETHANOL (ETHYL ALCOHOL) or ETHANOL SOLUTION (ETHYL ALCOHOL SOLUTION)
LGBF		FL	3				S2	30	1170	ETHANOL SOLUTION (ETHYL ALCOHOL SOLUTION)
LGBF		FL	3				S2	30	1171	ETHYLENE GLYCOL MONOETHYL ETHER
LGBF		FL	3				S2	30	1172	ETHYLENE GLYCOL MONOETHYL ETHER ACETATE
LGBF		FL	2				S2 S20	33	1173	ETHYL ACETATE
LGBF		FL	2				S2 S20	33	1175	ETHYLBENZENE
LGBF		FL	2				S2 S20	33	1176	ETHYL BORATE
LGBF		FL	3				S2	30	1177	2-ETHYLBUTYL ACETATE
LGBF		FL	2				S2 S20	33	1178	2-ETHYL-BUTYRALDEHYDE
LGBF		FL	2				S2 S20	33	1179	ETHYL BUTYL ETHER
LGBF		FL	3				S2	30	1180	ETHYL BUTYRATE
L4BH	TU15 TE15 TE19	FL	2			CV13 CV28	S2 S9 S19	63	1181	ETHYL CHLOROACETATE
L10CH	TU14 TU15 TE19 TE21	FL	1			CV1 CV13 CV28	S2 S9 S17	663	1182	ETHYL CHLOROFORMATE
L10DH	TU14 TU23 E21 TM2 TM3	FL	0	V1		CV23	S2 S20	X338	1183	ETHYLDICHLOROSILANE
L4BH	TU15 TE15	FL	2			CV13 CV28	S2 S19	336	1184	ETHYLENE DICHLORIDE
L15CH	TU14 TU15 TE19 TE21	FL	1			CV1 CV13 CV28	S2 S9 S17	663	1185	ETHYLENEIMINE, STABILIZED
LGBF		FL	3				S2	30	1188	ETHYLENE GLYCOL MONOMETHYL ETHER
LGBF		FL	3				S2	30	1189	ETHYLENE GLYCOL MONOMETHYL ETHER ACETATE

UN No.	Name and description	Class	Classification code	Packing group	Labels	Special provisions	Limited quantities	Packaging			Portable tanks and bulk containers	
								Packing instructions	Special packing provisions	Mixed packing provisions	Instructions	Special provisions
	3.1.2	2.2	2.2	2.1.1.3	5.2.2	3.3	3.4.6	4.1.4	4.1.4	4.1.10	4.2.5.2 7.3.2	4.2.5.3
(1)	(2)	(3a)	(3b)	(4)	(5)	(6)	(7)	(8)	(9a)	(9b)	(10)	(11)
1190	ETHYL FORMATE	3	F1	II	3		LQ4	P001 IBC02 R001		MP19	T4	TP1
1191	OCTYL ALDEHYDES	3	F1	III	3		LQ7	P001 IBC03 LP01 R001		MP19	T2	TP1
1192	ETHYL LACTATE	3	F1	III	3		LQ7	P001 IBC03 LP01 R001		MP19	T2	TP1
1193	ETHYL METHYL KETONE (METHYL ETHYL KETONE)	3	F1	II	3		LQ4	P001 IBC02 R001		MP19	T4	TP1
1194	ETHYL NITRITE SOLUTION	3	FT1	I	3 +6.1		LQ0	P001		MP7 MP17		
1195	ETHYL PROPIONATE	3	F1	II	3		LQ4	P001 IBC02 R001		MP19	T4	TP1
1196	ETHYLTRICHLOROSILANE	3	FC	II	3 +8		LQ4	P001 IBC02		MP19	T7	TP2
1197	EXTRACTS, FLAVOURING, LIQUID (vapour pressure at 50 °C more than 175 kPa)	3	F1	I	3	640A	LQ3	P001		MP7 MP17		
1197	EXTRACTS, FLAVOURING, LIQUID (vapour pressure at 50 °C more than 110 kPa but not more than 175 kPa)	3	F1	I	3	640B	LQ3	P001		MP7 MP17		
1197	EXTRACTS, FLAVOURING, LIQUID (vapour pressure at 50 °C more than 110 kPa but not more than 175 kPa)	3	F1	II	3	640C	LQ6	P001		MP19	T4	TP1 TP8
1197	EXTRACTS, FLAVOURING, LIQUID (vapour pressure at 50 °C not more than 110 kPa)	3	F1	II	3	640D	LQ6	P001 IBC02 R001		MP19	T4	TP1 TP8
1197	EXTRACTS, FLAVOURING, LIQUID	3	F1	III	3	640E	LQ7	P001 IBC03 LP01 R001		MP19	T2	TP1
1197	EXTRACTS, FLAVOURING, LIQUID (having a flash-point below 23 °C and viscous according to 2.2.3.1.4) (vapour pressure at 50 °C more than 175 kPa)	3	F1	III	3	640F	LQ7	P001 LP01 R001		MP19	T2	TP1
1197	EXTRACTS, FLAVOURING, LIQUID (having a flash-point below 23 °C and viscous according to 2.2.3.1.4) (vapour pressure at 50 °C more than 110 kPa but not more than 175 kPa)	3	F1	III	3	640G	LQ7	P001 LP01 R001		MP19	T2	TP1

ADR tank		Vehicle for tank carriage	Transport category	Special provisions for carriage				Hazard identifi-cation No.	UN No.	Name and description
Tank code	Special provisions			Packages	Bulk	Loading, unloading and handling	Operation			
4.3	4.3.5, 6.8.4	9.1.1.2	1.1.3.6	7.2.4	7.3.3	7.5.11	8.5	5.3.2.3		3.1.2
(12)	(13)	(14)	(15)	(16)	(17)	(18)	(19)	(20)	(1)	(2)
LGBF		FL	2				S2 S20	33	1190	ETHYL FORMATE
LGBF		FL	3				S2	30	1191	OCTYL ALDEHYDES
LGBF		FL	3				S2	30	1192	ETHYL LACTATE
LGBF		FL	2				S2 S20	33	1193	ETHYL METHYL KETONE (METHYL ETHYL KETONE)
L10CH	TU14 TU15 E21	FL	1			CV13 CV28	S2 S19	336	1194	ETHYL NITRITE SOLUTION
LGBF		FL	2				S2 S20	33	1195	ETHYL PROPIONATE
L4BH	TE15	FL	2				S2 S20	X338	1196	ETHYLTRICHLOROSILANE
L4BN		FL	1				S2 S20	33	1197	EXTRACTS, FLAVOURING, LIQUID (vapour pressure at 50 °C more than 175 kPa)
L1.5BN		FL	1				S2 S20	33	1197	EXTRACTS, FLAVOURING, LIQUID (vapour pressure at 50 °C more than 110 kPa but not more than 175 kPa)
L1.5BN		FL	2				S2 S20	33	1197	EXTRACTS, FLAVOURING, LIQUID (vapour pressure at 50 °C more than 110 kPa but not more than 175 kPa)
LGBF		FL	2				S2 S20	33	1197	EXTRACTS, FLAVOURING, LIQUID (vapour pressure at 50 °C not more than 110 kPa)
LGBF		FL	3				S2	30	1197	EXTRACTS, FLAVOURING, LIQUID
L4BN		FL	3				S2	33	1197	EXTRACTS, FLAVOURING, LIQUID (having a flash-point below 23 °C and viscous according to 2.2.3.1.4) (vapour pressure at 50 °C more than 175 kPa)
L1.5BN		FL	3				S2	33	1197	EXTRACTS, FLAVOURING, LIQUID (having a flash-point below 23 °C and viscous according to 2.2.3.1.4) (vapour pressure at 50 °C more than 110 kPa but not more than 175 kPa)

UN No.	Name and description	Class	Classification code	Packing group	Labels	Special provisions	Limited quantities	Packaging			Portable tanks and bulk containers	
								Packing instructions	Special packing provisions	Mixed packing provisions	Instructions	Special provisions
	3.1.2	2.2	2.2	2.1.1.3	5.2.2	3.3	3.4.6	4.1.4	4.1.4	4.1.10	4.2.5.2 7.3.2	4.2.5.3
(1)	(2)	(3a)	(3b)	(4)	(5)	(6)	(7)	(8)	(9a)	(9b)	(10)	(11)
1197	EXTRACTS, FLAVOURING, LIQUID (having a flash-point below 23 °C and viscous according to 2.2.3.1.4) (vapour pressure at 50 °C not more than 110 kPa)	3	F1	III	3	640H	LQ7	P001 IBC02 LP01 R001		MP19	T2	TP1
1198	FORMALDEHYDE SOLUTION, FLAMMABLE	3	FC	III	3 +8		LQ7	P001 IBC03 R001		MP19	T4	TP1
1199	FURALDEHYDES	6.1	TF1	II	6.1 +3		LQ0	P001 IBC02		MP15	T7	TP2
1201	FUSEL OIL	3	F1	II	3		LQ4	P001 IBC02 R001		MP19	T4	TP1
1201	FUSEL OIL	3	F1	III	3		LQ7	P001 IBC03 LP01 R001		MP19	T2	TP1
1202	GAS OIL or DIESEL FUEL or HEATING OIL, LIGHT (flash-point not more than 61 °C)	3	F1	III	3	640K	LQ7	P001 IBC03 LP01 R001		MP19	T2	TP1
1202	DIESEL FUEL complying with standard EN 590:1993 or GAS OIL or HEATING OIL, LIGHT with a flash-point as specified in EN 590:1993	3	F1	III	3	640L	LQ7	P001 IBC03 LP01 R001		MP19	T2	TP1
1202	GAS OIL or DIESEL FUEL or HEATING OIL, LIGHT (flash-point more than 61 °C and not more than 100 °C)	3	F1	III	3	640M	LQ7	P001 IBC03 LP01 R001		MP19	T2	TP1
1203	MOTOR SPIRIT or GASOLINE or PETROL	3	F1	II	3	243 534	LQ4	P001 IBC02 R001		MP19	T4	TP1
1204	NITROGLYCERIN SOLUTION IN ALCOHOL with not more than 1% nitroglycerin	3	D	II	3		LQ0	P001 IBC02	PP5	MP2		
1206	HEPTANES	3	F1	II	3		LQ4	P001 IBC02 R001		MP19	T4	TP1
1207	HEXALDEHYDE	3	F1	III	3		LQ7	P001 IBC03 LP01 R001		MP19	T2	TP1
1208	HEXANES	3	F1	II	3		LQ4	P001 IBC02 R001		MP19	T4	TP1
1210	PRINTING INK, flammable or PRINTING INK RELATED MATERIAL (including printing ink thinning or reducing compound), flammable (vapour pressure at 50 °C more than 175 kPa)	3	F1	I	3	163 640A	LQ3	P001		MP7 MP17	T11	TP1 TP8

ADR tank		Vehicle for tank carriage	Transport category	Special provisions for carriage				Hazard identifi-cation No.	UN No.	Name and description
Tank code	Special provisions			Packages	Bulk	Loading, unloading and handling	Operation			
4.3	4.3.5, 6.8.4	9.1.1.2	1.1.3.6	7.2.4	7.3.3	7.5.11	8.5	5.3.2.3		3.1.2
(12)	(13)	(14)	(15)	(16)	(17)	(18)	(19)	(20)	(1)	(2)
LGBF		FL	3				S2	33	1197	EXTRACTS, FLAVOURING, LIQUID (having a flash-point below 23 °C and viscous according to 2.2.3.1.4) (vapour pressure at 50 °C not more than 110 kPa)
L4BN		FL	3				S2	38	1198	FORMALDEHYDE SOLUTION, FLAMMABLE
L4BH	TU15 TE15 TE19	FL	2			CV13 CV28	S2 S9 S19	63	1199	FURALDEHYDES
LGBF		FL	2				S2 S20	33	1201	FUSEL OIL
LGBF		FL	3				S2	30	1201	FUSEL OIL
LGBF		FL	3				S2	30	1202	GAS OIL or DIESEL FUEL or HEATING OIL, LIGHT (flash-point not more than 61 °C)
LGBF		AT	3				S2	30	1202	DIESEL FUEL complying with standard EN 590:1993 or GAS OIL or HEATING OIL, LIGHT with a flash-point as specified in EN 590:1993
LGBV		AT	3					30	1202	GAS OIL or DIESEL FUEL or HEATING OIL, LIGHT (flash-point more than 61 °C and not more than 100 °C)
LGBF	TU9	FL	2				S2 S20	33	1203	MOTOR SPIRIT or GASOLINE or PETROL
			2				S2 S20		1204	NITROGLYCERIN SOLUTION IN ALCOHOL with not more than 1% nitroglycerin
LGBF		FL	2				S2 S20	33	1206	HEPTANES
LGBF		FL	3				S2	30	1207	HEXALDEHYDE
LGBF		FL	2				S2 S20	33	1208	HEXANES
L4BN		FL	1				S2 S20	33	1210	PRINTING INK, flammable or PRINTING INK RELATED MATERIAL (including printing ink thinning or reducing compound), flammable (vapour pressure at 50 °C more than 175 kPa)

UN No.	Name and description	Class	Classifi-cation code	Packing group	Labels	Special provi-sions	Limited quantities	Packaging			Portable tanks and bulk containers	
								Packing instruc-tions	Special packing provisions	Mixed packing provisions	Instruc-tions	Special provisions
	3.1.2	2.2	2.2	2.1.1.3	5.2.2	3.3	3.4.6	4.1.4	4.1.4	4.1.10	4.2.5.2 7.3.2	4.2.5.3
(1)	(2)	(3a)	(3b)	(4)	(5)	(6)	(7)	(8)	(9a)	(9b)	(10)	(11)
1210	PRINTING INK, flammable or PRINTING INK RELATED MATERIAL (including printing ink thinning or reducing compound), flammable (vapour pressure at 50 °C more than 110 kPa but not more than 175 kPa)	3	F1	I	3	163 640B	LQ3	P001		MP7 MP17	T11	TP1 TP8
1210	PRINTING INK, flammable or PRINTING INK RELATED MATERIAL (including printing ink thinning or reducing compound), flammable (vapour pressure at 50 °C more than 110 kPa but not more than 175 kPa)	3	F1	II	3	163 640C	LQ6	P001	PP1	MP19	T4	TP1 TP8
1210	PRINTING INK, flammable or PRINTING INK RELATED MATERIAL (including printing ink thinning or reducing compound), flammable (vapour pressure at 50 °C not more than 110 kPa)	3	F1	II	3	163 640D	LQ6	P001 IBC02 R001	PP1	MP19	T4	TP1 TP8
1210	PRINTING INK, flammable or PRINTING INK RELATED MATERIAL (including printing ink thinning or reducing compound), flammable	3	F1	III	3	163 640E	LQ7	P001 IBC03 LP01 R001	PP1	MP19	T2	TP1
1210	PRINTING INK, flammable or PRINTING INK RELATED MATERIAL (including printing ink thinning or reducing compound), flammable (having a flash-point below 23 °C and viscous according to 2.2.3.1.4) (vapour pressure at 50 °C more than 175 kPa)	3	F1	III	3	163 640F	LQ7	P001 LP01 R001	PP1	MP19	T2	TP1
1210	PRINTING INK, flammable or PRINTING INK RELATED MATERIAL (including printing ink thinning or reducing compound), flammable (having a flash-point below 23 °C and viscous according to 2.2.3.1.4) (vapour pressure at 50 °C more than 110 kPa but not more than 175 kPa)	3	F1	III	3	163 640G	LQ7	P001 LP01 R001	PP1	MP19	T2	TP1

ADR tank		Vehicle for tank carriage	Transport category	Special provisions for carriage				Hazard identifi-cation No.	UN No.	Name and description
Tank code	Special provisions			Packages	Bulk	Loading, unloading and handling	Operation			
4.3	4.3.5, 6.8.4	9.1.1.2	1.1.3.6	7.2.4	7.3.3	7.5.11	8.5	5.3.2.3		3.1.2
(12)	(13)	(14)	(15)	(16)	(17)	(18)	(19)	(20)	(1)	(2)
L1.5BN		FL	1				S2 S20	33	1210	PRINTING INK, flammable or PRINTING INK RELATED MATERIAL (including printing ink thinning or reducing compound), flammable (vapour pressure at 50 °C more than 110 kPa but not more than 175 kPa)
L1.5BN		FL	2				S2 S20	33	1210	PRINTING INK, flammable or PRINTING INK RELATED MATERIAL (including printing ink thinning or reducing compound), flammable (vapour pressure at 50 °C more than 110 kPa but not more than 175 kPa)
LGBF		FL	2				S2 S20	33	1210	PRINTING INK, flammable or PRINTING INK RELATED MATERIAL (including printing ink thinning or reducing compound), flammable (vapour pressure at 50 °C not more than 110 kPa)
LGBF		FL	3				S2	30	1210	PRINTING INK, flammable or PRINTING INK RELATED MATERIAL (including printing ink thinning or reducing compound), flammable
L4BN		FL	3				S2	33	1210	PRINTING INK, flammable or PRINTING INK RELATED MATERIAL (including printing ink thinning or reducing compound), flammable (having a flash-point below 23 °C and viscous according to 2.2.3.1.4) (vapour pressure at 50 °C more than 175 kPa)
L1.5BN		FL	3				S2	33	1210	PRINTING INK, flammable or PRINTING INK RELATED MATERIAL (including printing ink thinning or reducing compound), flammable (having a flash-point below 23 °C and viscous according to 2.2.3.1.4) (vapour pressure at 50 °C more than 110 kPa but not more than 175 kPa)

UN No.	Name and description	Class	Classification code	Packing group	Labels	Special provisions	Limited quantities	Packaging			Portable tanks and bulk containers	
								Packing instructions	Special packing provisions	Mixed packing provisions	Instructions	Special provisions
	3.1.2	2.2	2.2	2.1.1.3	5.2.2	3.3	3.4.6	4.1.4	4.1.4	4.1.10	4.2.5.2 7.3.2	4.2.5.3
(1)	(2)	(3a)	(3b)	(4)	(5)	(6)	(7)	(8)	(9a)	(9b)	(10)	(11)
1210	PRINTING INK, flammable or PRINTING INK RELATED MATERIAL (including printing ink thinning or reducing compound), flammable (having a flash-point below 23 °C and viscous according to 2.2.3.1.4) (vapour pressure at 50 °C not more than 110 kPa)	3	F1	III	3	163 640H	LQ7	P001 IBC02 LP01 R001	PP1	MP19	T2	TP1
1212	ISOBUTANOL (ISOBUTYL ALCOHOL)	3	F1	III	3		LQ7	P001 IBC03 LP01 R001		MP19	T2	TP1
1213	ISOBUTYL ACETATE	3	F1	II	3		LQ4	P001 IBC02 R001		MP19	T4	TP1
1214	ISOBUTYLAMINE	3	FC	II	3 +8		LQ4	P001 IBC02		MP19	T7	TP1
1216	ISOOCTENES	3	F1	II	3		LQ4	P001 IBC02 R001		MP19	T4	TP1
1218	ISOPRENE, STABILIZED	3	F1	I	3		LQ3	P001		MP7 MP17	T11	TP2
1219	ISOPROPANOL (ISOPROPYL ALCOHOL)	3	F1	II	3		LQ4	P001 IBC02 R001		MP19	T4	TP1
1220	ISOPROPYL ACETATE	3	F1	II	3		LQ4	P001 IBC02 R001		MP19	T4	TP1
1221	ISOPROPYLAMINE	3	FC	I	3 +8		LQ3	P001		MP7 MP17	T11	TP2
1222	ISOPROPYL NITRATE	3	F1	II	3		LQ4	P001 IBC02 R001	B7	MP19		
1223	KEROSENE	3	F1	III	3		LQ7	P001 IBC03 LP01 R001		MP19	T2	TP2
1224	KETONES, LIQUID, N.O.S. (vapour pressure at 50 °C more than 110 kPa but not more than 175 kPa)	3	F1	II	3	274 640C	LQ4	P001		MP19	T7	TP1 TP8 TP28
1224	KETONES, LIQUID, N.O.S. (vapour pressure at 50 °C not more than 110 kPa)	3	F1	II	3	274 640D	LQ4	P001 IBC02 R001		MP19	T7	TP1 TP8 TP28
1224	KETONES, LIQUID, N.O.S.	3	F1	III	3	274	LQ7	P001 IBC03 LP01 R001		MP19	T4	TP1 TP29
1228	MERCAPTANS, LIQUID, FLAMMABLE, TOXIC, N.O.S. or MERCAPTAN MIXTURE, LIQUID, FLAMMABLE, TOXIC, N.O.S.	3	FT1	II	3 +6.1	274	LQ0	P001 IBC02		MP19	T11	TP2 TP27
1228	MERCAPTANS, LIQUID, FLAMMABLE, TOXIC, N.O.S. or MERCAPTAN MIXTURE, LIQUID, FLAMMABLE, TOXIC, N.O.S.	3	FT1	III	3 +6.1	274	LQ7	P001 IBC03 R001		MP19	T7	TP1 TP28
1229	MESITYL OXIDE	3	F1	III	3		LQ7	P001 IBC03 LP01 R001		MP19	T2	TP1

ADR tank		Vehicle for tank carriage	Transport category	Special provisions for carriage				Hazard identifi-cation No.	UN No.	Name and description
Tank code	Special provisions			Packages	Bulk	Loading, unloading and handling	Operation			
4.3	4.3.5, 6.8.4	9.1.1.2	1.1.3.6	7.2.4	7.3.3	7.5.11	8.5	5.3.2.3		3.1.2
(12)	(13)	(14)	(15)	(16)	(17)	(18)	(19)	(20)	(1)	(2)
LGBF		FL	3				S2	33	1210	PRINTING INK, flammable or PRINTING INK RELATED MATERIAL (including printing ink thinning or reducing compound), flammable (having a flash-point below 23 °C and viscous according to 2.2.3.1.4) (vapour pressure at 50 °C not more than 110 kPa)
LGBF		FL	3				S2	30	1212	ISOBUTANOL (ISOBUTYL ALCOHOL)
LGBF		FL	2				S2 S20	33	1213	ISOBUTYL ACETATE
L4BH	TE15	FL	2				S2 S20	338	1214	ISOBUTYLAMINE
LGBF		FL	2				S2 S20	33	1216	ISOOCTENES
L1.5BN		FL	1				S2 S20	339	1218	ISOPRENE, STABILIZED
LGBF		FL	2				S2 S20	33	1219	ISOPROPANOL (ISOPROPYL ALCOHOL)
LGBF		FL	2				S2 S20	33	1220	ISOPROPYL ACETATE
L10CH	TU14 TE21	FL	1				S2 S20	338	1221	ISOPROPYLAMINE
			2				S2 S20		1222	ISOPROPYL NITRATE
LGBF		FL	3				S2	30	1223	KEROSENE
L1.5BN		FL	2				S2 S20	33	1224	KETONES, LIQUID, N.O.S. (vapour pressure at 50 °C more than 110 kPa but not more than 175 kPa)
LGBF		FL	2				S2 S20	33	1224	KETONES, LIQUID, N.O.S. (vapour pressure at 50 °C not more than 110 kPa)
LGBF		FL	3				S2	30	1224	KETONES, LIQUID, N.O.S.
L4BH	TU15 TE15	FL	2			CV13 CV28	S2 S19	336	1228	MERCAPTANS, LIQUID, FLAMMABLE, TOXIC, N.O.S. or MERCAPTAN MIXTURE, LIQUID, FLAMMABLE, TOXIC, N.O.S.
L4BH	TU15 TE15	FL	3			CV13 CV28	S2	36	1228	MERCAPTANS, LIQUID, FLAMMABLE, TOXIC, N.O.S. or MERCAPTAN MIXTURE, LIQUID, FLAMMABLE, TOXIC, N.O.S.
LGBF		FL	3				S2	30	1229	MESITYL OXIDE

UN No.	Name and description	Class	Classification code	Packing group	Labels	Special provisions	Limited quantities	Packaging			Portable tanks and bulk containers	
								Packing instructions	Special packing provisions	Mixed packing provisions	Instructions	Special provisions
	3.1.2	2.2	2.2	2.1.1.3	5.2.2	3.3	3.4.6	4.1.4	4.1.4	4.1.10	4.2.5.2 7.3.2	4.2.5.3
(1)	(2)	(3a)	(3b)	(4)	(5)	(6)	(7)	(8)	(9a)	(9b)	(10)	(11)
1230	METHANOL	3	FT1	II	3 +6.1	279	LQ0	P001 IBC02		MP19	T7	TP2
1231	METHYL ACETATE	3	F1	II	3		LQ4	P001 IBC02 R001		MP19	T4	TP1
1233	METHYLAMYL ACETATE	3	F1	III	3		LQ7	P001 IBC03 LP01 R001		MP19	T2	TP1
1234	METHYLAL	3	F1	II	3		LQ4	P001 IBC02	B8	MP19	T7	TP2
1235	METHYLAMINE, AQUEOUS SOLUTION	3	FC	II	3 +8		LQ4	P001 IBC02		MP19	T7	TP1
1237	METHYL BUTYRATE	3	F1	II	3		LQ4	P001 IBC02 R001		MP19	T4	TP1
1238	METHYL CHLOROFORMATE	6.1	TFC	I	6.1 +3 +8		LQ0	P602		MP8 MP17	T14	TP2
1239	METHYL CHLORO-METHYL ETHER	6.1	TF1	I	6.1 +3		LQ0	P602		MP8 MP17	T14	TP2
1242	METHYLDICHLOROSILANE	4.3	WFC	I	4.3 +3 +8		LQ0	P401 PR2		MP2	T10	TP2 TP7
1243	METHYL FORMATE	3	F1	I	3		LQ3	P001		MP7 MP17	T11	TP2
1244	METHYLHYDRAZINE	6.1	TFC	I	6.1 +3 +8		LQ0	P602		MP8 MP17	T14	TP2
1245	METHYL ISOBUTYL KETONE	3	F1	II	3		LQ4	P001 IBC02 R001		MP19	T4	TP1
1246	METHYL ISOPROPENYL KETONE, STABILIZED	3	F1	II	3		LQ4	P001 IBC02 R001		MP19	T4	TP1
1247	METHYL METHACRYLATE MONOMER, STABILIZED	3	F1	II	3		LQ4	P001 IBC02 R001		MP19	T4	TP1
1248	METHYL PROPIONATE	3	F1	II	3		LQ4	P001 IBC02 R001		MP19	T4	TP1
1249	METHYL PROPYL KETONE	3	F1	II	3		LQ4	P001 IBC02 R001		MP19	T4	TP1
1250	METHYLTRICHLORO-SILANE	3	FC	I	3 +8		LQ3	P001		MP7 MP17	T11	TP2
1251	METHYL VINYL KETONE, STABILIZED	6.1	TFC	I	6.1 +3 +8		LQ0	P601 PR3		MP8 MP17	T14	TP2
1259	NICKEL CARBONYL	6.1	TF1	I	6.1 +3		LQ0	P601 PR3		MP2		
1261	NITROMETHANE	3	F1	II	3		LQ4	P001 R001	RR2	MP19		
1262	OCTANES	3	F1	II	3		LQ4	P001 IBC02 R001		MP19	T4	TP1

ADR tank		Vehicle for tank carriage	Transport category	Special provisions for carriage				Hazard identification No.	UN No.	Name and description
Tank code	Special provisions			Packages	Bulk	Loading, unloading and handling	Operation			
4.3	4.3.5, 6.8.4	9.1.1.2	1.1.3.6	7.2.4	7.3.3	7.5.11	8.5	5.3.2.3		3.1.2
(12)	(13)	(14)	(15)	(16)	(17)	(18)	(19)	(20)	(1)	(2)
L4BH	TU15 TE15	FL	2			CV13 CV28	S2 S19	336	1230	METHANOL
LGBF		FL	2				S2 S20	33	1231	METHYL ACETATE
LGBF		FL	3				S2	30	1233	METHYLAMYL ACETATE
L1.5BN		FL	2				S2 S20	33	1234	METHYLAL
L4BH	TE15	FL	2				S2 S20	338	1235	METHYLAMINE, AQUEOUS SOLUTION
LGBF		FL	2				S2 S20	33	1237	METHYL BUTYRATE
L10CH	TU14 TU15 TE19 TE21	FL	1			CV1 CV13 CV28	S2 S9 S17	663	1238	METHYL CHLOROFORMATE
L10CH	TU14 TU15 TE19 TE21	FL	1			CV1 CV13 CV28	S2 S9 S17	663	1239	METHYL CHLORO-METHYL ETHER
L10DH	TU14 TU24 TE21 TM2 TM3	FL	0	V1		CV23	S2 S20	X338	1242	METHYLDICHLOROSILANE
L4BN		FL	1				S2 S20	33	1243	METHYL FORMATE
L10CH	TU14 TU15 TE19 TE21	FL	1			CV1 CV13 CV28	S2 S9 S17	663	1244	METHYLHYDRAZINE
LGBF		FL	2				S2 S20	33	1245	METHYL ISOBUTYL KETONE
LGBF		FL	2				S2 S20	339	1246	METHYL ISOPROPENYL KETONE, STABILIZED
LGBF		FL	2				S2 S20	339	1247	METHYL METHACRYLATE MONOMER, STABILIZED
LGBF		FL	2				S2 S20	33	1248	METHYL PROPIONATE
LGBF		FL	2				S2 S20	33	1249	METHYL PROPYL KETONE
L10CH	TU14 TE21	FL	1				S2 S20	X338	1250	METHYLTRICHLORO-SILANE
L10CH	TU14 TU15 TE19 TE21	FL	1			CV1 CV13 CV28	S2 S9 S17	639	1251	METHYL VINYL KETONE, STABILIZED
L15CH	TU14 TU15 TU31 TE19 TE21 TM3	FL	1			CV1 CV13 CV28	S2 S9 S17	663	1259	NICKEL CARBONYL
			2				S2 S20		1261	NITROMETHANE
LGBF		FL	2				S2 S20	33	1262	OCTANES

UN No.	Name and description	Class	Classifi-cation code	Packing group	Labels	Special provi-sions	Limited quantities	Packaging			Portable tanks and bulk containers	
								Packing instruc-tions	Special packing provisions	Mixed packing provisions	Instruc-tions	Special provisions
	3.1.2	2.2	2.2	2.1.1.3	5.2.2	3.3	3.4.6	4.1.4	4.1.4	4.1.10	4.2.5.2 7.3.2	4.2.5.3
(1)	(2)	(3a)	(3b)	(4)	(5)	(6)	(7)	(8)	(9a)	(9b)	(10)	(11)
1263	PAINT (including paint, lacquer, enamel, stain, shellac, varnish, polish, liquid filler and liquid lacquer base) or PAINT RELATED MATERIAL (including paint thinning and reducing compound) (vapour pressure at 50 °C more than 175 kPa)	3	F1	I	3	163 640A 650	LQ3	P001		MP7 MP17	T11	TP1 TP8
1263	PAINT (including paint, lacquer, enamel, stain, shellac, varnish, polish, liquid filler and liquid lacquer base) or PAINT RELATED MATERIAL (including paint thinning and reducing compound) (vapour pressure at 50 °C more than 110 kPa but not more than 175 kpa)	3	F1	I	3	163 640B 650	LQ3	P001		MP7 MP17	T11	TP1 TP8
1263	PAINT (including paint, lacquer, enamel, stain, shellac, varnish, polish, liquid filler and liquid lacquer base) or PAINT RELATED MATERIAL (including paint thinning and reducing compound) (vapour pressure at 50 °C more than 110 kPa but not more than 175 kPa)	3	F1	II	3	163 640C 650	LQ6	P001	PP1	MP19	T4	TP1 TP8
1263	PAINT (including paint, lacquer, enamel, stain, shellac, varnish, polish, liquid filler and liquid lacquer base) or PAINT RELATED MATERIAL (including paint thinning and reducing compound) (vapour pressure at 50 °C not more than 110 kPa)	3	F1	II	3	163 640D 650	LQ6	P001 IBC02 R001	PP1	MP19	T4	TP1 TP8
1263	PAINT (including paint, lacquer, enamel, stain, shellac, varnish, polish, liquid filler and liquid lacquer base) or PAINT RELATED MATERIAL (including paint thinning and reducing compound)	3	F1	III	3	163 640E 650	LQ7	P001 IBC03 LP01 R001	PP1	MP19	T2	TP1
1263	PAINT (including paint, lacquer, enamel, stain, shellac, varnish, polish, liquid filler and liquid lacquer base) or PAINT RELATED MATERIAL (including paint thinning and reducing compound) (having a flash-point below 23 °C and viscous according to 2.2.3.1.4) (vapour pressure at 50 °C more than 175 kPa)	3	F1	III	3	163 640F 650	LQ7	P001 LP01 R001	PP1	MP19	T2	TP1

ADR tank		Vehicle for tank carriage	Transport category	Special provisions for carriage				Hazard identifi-cation No.	UN No.	Name and description
Tank code	Special provisions			Packages	Bulk	Loading, unloading and handling	Operation			
4.3	4.3.5, 6.8.4	9.1.1.2	1.1.3.6	7.2.4	7.3.3	7.5.11	8.5	5.3.2.3		3.1.2
(12)	(13)	(14)	(15)	(16)	(17)	(18)	(19)	(20)	(1)	(2)
L4BN		FL	1				S2 S20	33	1263	PAINT (including paint, lacquer, enamel, stain, shellac, varnish, polish, liquid filler and liquid lacquer base) or PAINT RELATED MATERIAL (including paint thinning and reducing compound) (vapour pressure at 50 °C more than 175 kPa)
L1.5BN		FL	1				S2 S20	33	1263	PAINT (including paint, lacquer, enamel, stain, shellac, varnish, polish, liquid filler and liquid lacquer base) or PAINT RELATED MATERIAL (including paint thinning and reducing compound) (vapour pressure at 50 °C more than 110 kPa but not more than 175 kpa)
L1.5BN		FL	2				S2 S20	33	1263	PAINT (including paint, lacquer, enamel, stain, shellac, varnish, polish, liquid filler and liquid lacquer base) or PAINT RELATED MATERIAL (including paint thinning and reducing compound) (vapour pressure at 50 °C more than 110 kPa but not more than 175 kPa)
LGBF		FL	2				S2 S20	33	1263	PAINT (including paint, lacquer, enamel, stain, shellac, varnish, polish, liquid filler and liquid lacquer base) or PAINT RELATED MATERIAL (including paint thinning and reducing compound) (vapour pressure at 50 °C not more than 110 kPa)
LGBF		FL	3				S2	30	1263	PAINT (including paint, lacquer, enamel, stain, shellac, varnish, polish, liquid filler and liquid lacquer base) or PAINT RELATED MATERIAL (including paint thinning and reducing compound)
L4BN		FL	3				S2	33	1263	PAINT (including paint, lacquer, enamel, stain, shellac, varnish, polish, liquid filler and liquid lacquer base) or PAINT RELATED MATERIAL (including paint thinning and reducing compound) (having a flash-point below 23 °C and viscous according to 2.2.3.1.4) (vapour pressure at 50 °C more than 175 kPa)

UN No.	Name and description	Class	Classifi-cation code	Packing group	Labels	Special provi-sions	Limited quantities	Packaging			Portable tanks and bulk containers	
								Packing instruc-tions	Special packing provisions	Mixed packing provisions	Instruc-tions	Special provisions
	3.1.2	2.2	2.2	2.1.1.3	5.2.2	3.3	3.4.6	4.1.4	4.1.4	4.1.10	4.2.5.2 7.3.2	4.2.5.3
(1)	(2)	(3a)	(3b)	(4)	(5)	(6)	(7)	(8)	(9a)	(9b)	(10)	(11)
1263	PAINT (including paint, lacquer, enamel, stain, shellac, varnish, polish, liquid filler and liquid lacquer base) or PAINT RELATED MATERIAL (including paint thinning and reducing compound) (having a flash-point below 23 °C and viscous according to 2.2.3.1.4) (vapour pressure at 50 °C more than 110 kPa but not more than 175 kPa)	3	F1	III	3	163 640G 650	LQ7	P001 LP01 R001	PP1	MP19	T2	TP1
1263	PAINT (including paint, lacquer, enamel, stain, shellac, varnish, polish, liquid filler and liquid lacquer base) or PAINT RELATED MATERIAL (including paint thinning and reducing compound) (having a flash-point below 23 °C and viscous according to 2.2.3.1.4) (vapour pressure at 50 °C not more than 110 kPa)	3	F1	III	3	163 640H 650	LQ7	P001 IBC02 LP01 R001	PP1	MP19	T2	TP1
1264	PARALDEHYDE	3	F1	III	3		LQ7	P001 IBC03 LP01 R001		MP19	T2	TP1
1265	PENTANES, liquid	3	F1	I	3		LQ3	P001		MP7 MP17	T11	TP2
1265	PENTANES, liquid	3	F1	II	3		LQ4	P001 IBC02	B8	MP19	T4	TP1
1266	PERFUMERY PRODUCTS with flammable solvents (vapour pressure at 50 °C more than 175 kPa)	3	F1	I	3	640A	LQ3	P001		MP7 MP17		
1266	PERFUMERY PRODUCTS with flammable solvents (vapour pressure at 50 °C more than 110 kPa but not more than 175 kPa)	3	F1	I	3	640B	LQ3	P001		MP7 MP17		
1266	PERFUMERY PRODUCTS with flammable solvents (vapour pressure at 50 °C more than 110 kPa but not more than 175 kPa)	3	F1	II	3	640C	LQ6	P001		MP19	T4	TP1 TP8
1266	PERFUMERY PRODUCTS with flammable solvents (vapour pressure at 50 °C not more than 110 kPa)	3	F1	II	3	640D	LQ6	P001 IBC02 R001		MP19	T4	TP1 TP8
1266	PERFUMERY PRODUCTS with flammable solvents	3	F1	III	3	640E	LQ7	P001 IBC03 LP01 R001		MP19	T2	TP1
1266	PERFUMERY PRODUCTS with flammable solvents (having a flash-point below 23 °C and viscous according to 2.2.3.1.4) (vapour pressure at 50 °C more than 175 kPa)	3	F1	III	3	640F	LQ7	P001 LP01 R001		MP19	T2	TP1

ADR tank		Vehicle for tank carriage	Transport category	Special provisions for carriage				Hazard identifi-cation No.	UN No.	Name and description
Tank code	Special provisions			Packages	Bulk	Loading, unloading and handling	Operation			
4.3	4.3.5, 6.8.4	9.1.1.2	1.1.3.6	7.2.4	7.3.3	7.5.11	8.5	5.3.2.3		3.1.2
(12)	(13)	(14)	(15)	(16)	(17)	(18)	(19)	(20)	(1)	(2)
L1.5BN		FL	3				S2	33	1263	PAINT (including paint, lacquer, enamel, stain, shellac, varnish, polish, liquid filler and liquid lacquer base) or PAINT RELATED MATERIAL (including paint thinning and reducing compound) (having a flash-point below 23 °C and viscous according to 2.2.3.1.4) (vapour pressure at 50 °C more than 110 kPa but not more than 175 kPa)
LGBF		FL	3				S2	33	1263	PAINT (including paint, lacquer, enamel, stain, shellac, varnish, polish, liquid filler and liquid lacquer base) or PAINT RELATED MATERIAL (including paint thinning and reducing compound) (having a flash-point below 23 °C and viscous according to 2.2.3.1.4) (vapour pressure at 50 °C not more than 110 kPa)
LGBF		FL	3				S2	30	1264	PARALDEHYDE
L4BN		FL	1				S2 S20	33	1265	PENTANES, liquid
L1.5BN		FL	2				S2 S20	33	1265	PENTANES, liquid
L4BN		FL	1				S2 S20	33	1266	PERFUMERY PRODUCTS with flammable solvents (vapour pressure at 50 °C more than 175 kPa)
L1.5BN		FL	1				S2 S20	33	1266	PERFUMERY PRODUCTS with flammable solvents (vapour pressure at 50 °C more than 110 kPa but not more than 175 kPa)
L1.5BN		FL	2				S2 S20	33	1266	PERFUMERY PRODUCTS with flammable solvents (vapour pressure at 50 °C more than 110 kPa but not more than 175 kPa)
LGBF		FL	2				S2 S20	33	1266	PERFUMERY PRODUCTS with flammable solvents (vapour pressure at 50 °C not more than 110 kPa)
LGBF		FL	3				S2	30	1266	PERFUMERY PRODUCTS with flammable solvents
L4BN		FL	3				S2	33	1266	PERFUMERY PRODUCTS with flammable solvents (having a flash-point below 23 °C and viscous according to 2.2.3.1.4) (vapour pressure at 50 °C more than 175 kPa)

UN No.	Name and description	Class	Classification code	Packing group	Labels	Special provisions	Limited quantities	Packaging			Portable tanks and bulk containers	
								Packing instructions	Special packing provisions	Mixed packing provisions	Instructions	Special provisions
	3.1.2	2.2	2.2	2.1.1.3	5.2.2	3.3	3.4.6	4.1.4	4.1.4	4.1.10	4.2.5.2 7.3.2	4.2.5.3
(1)	(2)	(3a)	(3b)	(4)	(5)	(6)	(7)	(8)	(9a)	(9b)	(10)	(11)
1266	PERFUMERY PRODUCTS with flammable solvents (having a flash-point below 23 °C and viscous according to 2.2.3.1.4) (vapour pressure at 50 °C more than 110 kPa but not more than 175 kPa)	3	F1	III	3	640G	LQ7	P001 LP01 R001		MP19	T2	TP1
1266	PERFUMERY PRODUCTS with flammable solvents (having a flash-point below 23 °C and viscous according to 2.2.3.1.4) (vapour pressure at 50 °C not more than 110 kPa)	3	F1	III	3	640H	LQ7	P001 IBC02 LP01 R001		MP19	T2	TP1
1267	PETROLEUM CRUDE OIL (vapour pressure at 50 °C more than 175 kPa)	3	F1	I	3	640A	LQ3	P001		MP7 MP17	T11	TP1 TP8
1267	PETROLEUM CRUDE OIL (vapour pressure at 50 °C more than 110 kPa but not more than 175 kPa)	3	F1	I	3	640B	LQ3	P001		MP7 MP17	T11	TP1 TP8
1267	PETROLEUM CRUDE OIL (vapour pressure at 50 °C not more than 110 kPa)	3	F1	I	3	640P 649	LQ3	P001		MP7 MP17	T11	TP1 TP8
1267	PETROLEUM CRUDE OIL (vapour pressure at 50 °C more than 110 kPa but not more than 175 kPa)	3	F1	II	3	640C 649	LQ4	P001		MP19	T4	TP1 TP8
1267	PETROLEUM CRUDE OIL (vapour pressure at 50 °C not more than 110 kPa)	3	F1	II	3	640D 649	LQ4	P001 IBC02 R001		MP19	T4	TP1 TP8
1267	PETROLEUM CRUDE OIL	3	F1	III	3		LQ7	P001 IBC03 LP01 R001		MP19	T2	TP1
1268	PETROLEUM DISTILLATES, N.O.S. or PETROLEUM PRODUCTS, N.O.S. (vapour pressure at 50 °C more than 175 kPa)	3	F1	I	3	640A	LQ3	P001		MP7 MP17	T11	TP1 TP8 TP9
1268	PETROLEUM DISTILLATES, N.O.S. or PETROLEUM PRODUCTS, N.O.S.(vapour pressure at 50 °C more than 110 kPa but not more than 175 kPa)	3	F1	I	3	640B	LQ3	P001		MP7 MP17	T11	TP1 TP8 TP9
1268	PETROLEUM DISTILLATES, N.O.S. or PETROLEUM PRODUCTS, N.O.S. (vapour pressure at 50 °C not more than 110 kPa)	3	F1	I	3	640P 649	LQ3	P001		MP7 MP19	T11	TP1 TP8 TP9
1268	PETROLEUM DISTILLATES, N.O.S. or PETROLEUM PRODUCTS, N.O.S. (vapour pressure at 50 °C more than 110 kPa but not more than 175 kPa)	3	F1	II	3	640C 649	LQ4	P001		MP19	T7	TP1 TP8 TP9 TP28

ADR tank		Vehicle for tank carriage	Transport category	Special provisions for carriage				Hazard identifi-cation No.	UN No.	Name and description
Tank code	Special provisions			Packages	Bulk	Loading, unloading and handling	Operation			
4.3	4.3.5, 6.8.4	9.1.1.2	1.1.3.6	7.2.4	7.3.3	7.5.11	8.5	5.3.2.3		3.1.2
(12)	(13)	(14)	(15)	(16)	(17)	(18)	(19)	(20)	(1)	(2)
L1.5BN		FL	3				S2	33	1266	PERFUMERY PRODUCTS with flammable solvents (having a flash-point below 23 °C and viscous according to 2.2.3.1.4) (vapour pressure at 50 °C more than 110 kPa but not more than 175 kPa)
LGBF		FL	3				S2	33	1266	PERFUMERY PRODUCTS with flammable solvents (having a flash-point below 23 °C and viscous according to 2.2.3.1.4) (vapour pressure at 50 °C not more than 110 kPa)
L4BN		FL	1				S2 S20	33	1267	PETROLEUM CRUDE OIL (vapour pressure at 50 °C more than 175 kPa)
L1.5BN		FL	1				S2 S20	33	1267	PETROLEUM CRUDE OIL (vapour pressure at 50 °C more than 110 kPa but not more than 175 kPa)
L1.5BN		FL	1				S2 S20	33	1267	PETROLEUM CRUDE OIL (vapour pressure at 50 °C not more than 110 kPa)
L1.5BN		FL	2				S2 S20	33	1267	PETROLEUM CRUDE OIL (vapour pressure at 50 °C more than 110 kPa but not more than 175 kPa)
LGBF		FL	2				S2 S20	33	1267	PETROLEUM CRUDE OIL (vapour pressure at 50 °C not more than 110 kPa)
LGBF		FL	3				S2	30	1267	PETROLEUM CRUDE OIL
L4BN		FL	1				S2 S20	33	1268	PETROLEUM DISTILLATES, N.O.S. or PETROLEUM PRODUCTS, N.O.S. (vapour pressure at 50 °C more than 175 kPa)
L1.5BN		FL	1				S2 S20	33	1268	PETROLEUM DISTILLATES, N.O.S. or PETROLEUM PRODUCTS, N.O.S.(vapour pressure at 50 °C more than 110 kPa but not more than 175 kPa)
L1.5BN		FL	1				S2 S20	33	1268	PETROLEUM DISTILLATES, N.O.S. or PETROLEUM PRODUCTS, N.O.S. (vapour pressure at 50 °C not more than 110 kPa)
L1.5BN		FL	2				S2 S20	33	1268	PETROLEUM DISTILLATES, N.O.S. or PETROLEUM PRODUCTS, N.O.S. (vapour pressure at 50 °C more than 110 kPa but not more than 175 kPa)

UN No.	Name and description	Class	Classification code	Packing group	Labels	Special provisions	Limited quantities	Packaging			Portable tanks and bulk containers	
								Packing instructions	Special packing provisions	Mixed packing provisions	Instructions	Special provisions
	3.1.2	2.2	2.2	2.1.1.3	5.2.2	3.3	3.4.6	4.1.4	4.1.4	4.1.10	4.2.5.2 7.3.2	4.2.5.3
(1)	(2)	(3a)	(3b)	(4)	(5)	(6)	(7)	(8)	(9a)	(9b)	(10)	(11)
1268	PETROLEUM DISTILLATES, N.O.S. or PETROLEUM PRODUCTS, N.O.S. (vapour pressure at 50 °C not more than 110 kPa)	3	F1	II	3	640D 649	LQ4	P001 IBC02 R001		MP19	T7	TP1 TP8 TP9 TP28
1268	PETROLEUM DISTILLATES, N.O.S. or PETROLEUM PRODUCTS, N.O.S.	3	F1	III	3		LQ7	P001 IBC03 LP01 R001		MP19	T4	TP1 TP9 TP29
1272	PINE OIL	3	F1	III	3		LQ7	P001 IBC03 LP01 R001		MP19	T2	TP1
1274	n-PROPANOL (PROPYL ALCOHOL, NORMAL)	3	F1	II	3		LQ4	P001 IBC02 R001		MP19	T4	TP1
1274	n-PROPANOL (PROPYL ALCOHOL, NORMAL)	3	F1	III	3		LQ7	P001 IBC03 LP01 R001		MP19	T2	TP1
1275	PROPIONALDEHYDE	3	F1	II	3		LQ4	P001 IBC02 R001		MP19	T7	TP1
1276	n-PROPYL ACETATE	3	F1	II	3		LQ4	P001 IBC02 R001		MP19	T4	TP1
1277	PROPYLAMINE	3	FC	II	3 +8		LQ4	P001 IBC02		MP19	T7	TP1
1278	1-CHLOROPROPANE	3	F1	II	3		LQ4	P001 IBC02	B8	MP19	T7	TP2
1279	1,2-DICHLOROPROPANE	3	F1	II	3		LQ4	P001 IBC02 R001		MP19	T4	TP1
1280	PROPYLENE OXIDE	3	F1	I	3		LQ3	P001		MP7 MP17	T11	TP2 TP7
1281	PROPYL FORMATES	3	F1	II	3		LQ4	P001 IBC02 R001		MP19	T4	TP1
1282	PYRIDINE	3	F1	II	3		LQ4	P001 IBC02 R001		MP19	T4	TP2
1286	ROSIN OIL (vapour pressure at 50 °C more than 175 kPa)	3	F1	I	3	640A	LQ3	P001		MP7 MP17		
1286	ROSIN OIL (vapour pressure at 50 °C more than 110 kPa but not more than 175 kPa)	3	F1	I	3	640B	LQ3	P001		MP7 MP17		
1286	ROSIN OIL (vapour pressure at 50 °C more than 110 kPa but not more than 175 kPa)	3	F1	II	3	640C	LQ6	P001		MP19	T4	TP1
1286	ROSIN OIL (vapour pressure at 50 °C not more than 110 kPa)	3	F1	II	3	640D	LQ6	P001 IBC02 R001		MP19	T4	TP1
1286	ROSIN OIL	3	F1	III	3	640E	LQ7	P001 IBC03 LP01 R001		MP19	T2	TP1
1286	ROSIN OIL (having a flash-point below 23 °C and viscous according to 2.2.3.1.4) (vapour pressure at 50 °C more than 175 kPa)	3	F1	III	3	640F	LQ7	P001 LP01 R001		MP19	T2	TP1

ADR tank		Vehicle for tank carriage	Transport category	Special provisions for carriage				Hazard identification No.	UN No.	Name and description
Tank code	Special provisions			Packages	Bulk	Loading, unloading and handling	Operation			
4.3	4.3.5, 6.8.4	9.1.1.2	1.1.3.6	7.2.4	7.3.3	7.5.11	8.5	5.3.2.3		3.1.2
(12)	(13)	(14)	(15)	(16)	(17)	(18)	(19)	(20)	(1)	(2)
LGBF		FL	2				S2 S20	33	1268	PETROLEUM DISTILLATES, N.O.S. or PETROLEUM PRODUCTS, N.O.S. (vapour pressure at 50 °C not more than 110 kPa)
LGBF		FL	3				S2	30	1268	PETROLEUM DISTILLATES, N.O.S. or PETROLEUM PRODUCTS, N.O.S.
LGBF		FL	3				S2	30	1272	PINE OIL
LGBF		FL	2				S2 S20	33	1274	n-PROPANOL (PROPYL ALCOHOL, NORMAL)
LGBF		FL	3				S2	30	1274	n-PROPANOL (PROPYL ALCOHOL, NORMAL)
LGBF		FL	2				S2 S20	33	1275	PROPIONALDEHYDE
LGBF		FL	2				S2 S20	33	1276	n-PROPYL ACETATE
L4BH	TE15	FL	2				S2 S20	338	1277	PROPYLAMINE
L1.5BN		FL	2				S2 S20	33	1278	1-CHLOROPROPANE
LGBF		FL	2				S2 S20	33	1279	1,2-DICHLOROPROPANE
L1.5BN		FL	1				S2 S20	33	1280	PROPYLENE OXIDE
LGBF		FL	2				S2 S20	33	1281	PROPYL FORMATES
LGBF		FL	2				S2 S20	33	1282	PYRIDINE
L4BN		FL	1				S2 S20	33	1286	ROSIN OIL (vapour pressure at 50 °C more than 175 kPa)
L1.5BN		FL	1				S2 S20	33	1286	ROSIN OIL (vapour pressure at 50 °C more than 110 kPa but not more than 175 kPa)
L1.5BN		FL	2				S2 S20	33	1286	ROSIN OIL (vapour pressure at 50 °C more than 110 kPa but not more than 175 kPa)
LGBF		FL	2				S2 S20	33	1286	ROSIN OIL (vapour pressure at 50 °C not more than 110 kPa)
LGBF		FL	3				S2	30	1286	ROSIN OIL
L4BN		FL	3				S2	33	1286	ROSIN OIL (having a flash-point below 23 °C and viscous according to 2.2.3.1.4) (vapour pressure at 50 °C more than 175 kPa)

UN No.	Name and description	Class	Classification code	Packing group	Labels	Special provisions	Limited quantities	Packaging			Portable tanks and bulk containers	
								Packing instructions	Special packing provisions	Mixed packing provisions	Instructions	Special provisions
	3.1.2	2.2	2.2	2.1.1.3	5.2.2	3.3	3.4.6	4.1.4	4.1.4	4.1.10	4.2.5.2 7.3.2	4.2.5.3
(1)	(2)	(3a)	(3b)	(4)	(5)	(6)	(7)	(8)	(9a)	(9b)	(10)	(11)
1286	ROSIN OIL (having a flash-point below 23 °C and viscous according to 2.2.3.1.4) (vapour pressure at 50 °C more than 110 kPa but not more than 175 kPa)	3	F1	III	3	640G	LQ7	P001 LP01 R001		MP19	T2	TP1
1286	ROSIN OIL (having a flash-point below 23 °C and viscous according to 2.2.3.1.4) (vapour pressure at 50 °C not more than 110 kPa)	3	F1	III	3	640H	LQ7	P001 IBC02 LP01 R001		MP19	T2	TP1
1287	RUBBER SOLUTION (vapour pressure at 50 °C more than 175 kPa)	3	F1	I	3	640A	LQ3	P001		MP7 MP17		
1287	RUBBER SOLUTION (vapour pressure at 50 °C more than 110 kPa but not more than 175 kPa)	3	F1	I	3	640B	LQ3	P001		MP7 MP17		
1287	RUBBER SOLUTION (vapour pressure at 50 °C more than 110 kPa but not more than 175 kPa)	3	F1	II	3	640C	LQ6	P001		MP19	T4	TP1 TP8
1287	RUBBER SOLUTION (vapour pressure at 50 °C not more than 110 kPa)	3	F1	II	3	640D	LQ6	P001 IBC02 R001		MP19	T4	TP1 TP8
1287	RUBBER SOLUTION	3	F1	III	3	640E	LQ7	P001 IBC03 LP01 R001		MP19	T2	TP1
1287	RUBBER SOLUTION (having a flash-point below 23 °C and viscous according to 2.2.3.1.4) (vapour pressure at 50 °C more than 175 kPa)	3	F1	III	3	640F	LQ7	P001 LP01 R001		MP19	T2	TP1
1287	RUBBER SOLUTION (having a flash-point below 23 °C and viscous according to 2.2.3.1.4) (vapour pressure at 50 °C more than 110 kPa but not more than 175 kPa)	3	F1	III	3	640G	LQ7	P001 LP01 R001		MP19	T2	TP1
1287	RUBBER SOLUTION (having a flash-point below 23 °C and viscous according to 2.2.3.1.4) (vapour pressure at 50 °C not more than 110 kPa)	3	F1	III	3	640H	LQ7	P001 IBC02 LP01 R001		MP19	T2	TP1
1288	SHALE OIL	3	F1	II	3		LQ4	P001 IBC02 R001		MP19	T4	TP1 TP8
1288	SHALE OIL	3	F1	III	3		LQ7	P001 IBC03 LP01 R001		MP19	T2	TP1
1289	SODIUM METHYLATE SOLUTION in alcohol	3	FC	II	3 +8		LQ4	P001 IBC02		MP19	T7	TP1 TP8
1289	SODIUM METHYLATE SOLUTION in alcohol	3	FC	III	3 +8		LQ7	P001 IBC02 R001		MP19	T4	TP1

ADR tank		Vehicle for tank carriage	Transport category	Special provisions for carriage				Hazard identification No.	UN No.	Name and description
Tank code	Special provisions			Packages	Bulk	Loading, unloading and handling	Operation			
4.3	4.3.5, 6.8.4	9.1.1.2	1.1.3.6	7.2.4	7.3.3	7.5.11	8.5	5.3.2.3		3.1.2
(12)	(13)	(14)	(15)	(16)	(17)	(18)	(19)	(20)	(1)	(2)
L1.5BN		FL	3				S2	33	1286	ROSIN OIL (having a flash-point below 23 °C and viscous according to 2.2.3.1.4) (vapour pressure at 50 °C more than 110 kPa but not more than 175 kPa)
LGBF		FL	3				S2	33	1286	ROSIN OIL (having a flash-point below 23 °C and viscous according to 2.2.3.1.4) (vapour pressure at 50 °C not more than 110 kPa)
L4BN		FL	1				S2 S20	33	1287	RUBBER SOLUTION (vapour pressure at 50 °C more than 175 kPa)
L1.5BN		FL	1				S2 S20	33	1287	RUBBER SOLUTION (vapour pressure at 50 °C more than 110 kPa but not more than 175 kPa)
L1.5BN		FL	2				S2 S20	33	1287	RUBBER SOLUTION (vapour pressure at 50 °C more than 110 kPa but not more than 175 kPa)
LGBF		FL	2				S2 S20	33	1287	RUBBER SOLUTION (vapour pressure at 50 °C not more than 110 kPa)
LGBF		FL	3				S2	30	1287	RUBBER SOLUTION
L4BN		FL	3				S2	33	1287	RUBBER SOLUTION (having a flash-point below 23 °C and viscous according to 2.2.3.1.4) (vapour pressure at 50 °C more than 175 kPa)
L1.5BN		FL	3				S2	33	1287	RUBBER SOLUTION (having a flash-point below 23 °C and viscous according to 2.2.3.1.4) (vapour pressure at 50 °C more than 110 kPa but not more than 175 kPa)
LGBF		FL	3				S2	33	1287	RUBBER SOLUTION (having a flash-point below 23 °C and viscous according to 2.2.3.1.4) (vapour pressure at 50 °C not more than 110 kPa)
LGBF		FL	2				S2 S20	33	1288	SHALE OIL
LGBF		FL	3				S2	30	1288	SHALE OIL
L4BH	TE15	FL	2				S2 S20	338	1289	SODIUM METHYLATE SOLUTION in alcohol
L4BN		FL	3				S2	38	1289	SODIUM METHYLATE SOLUTION in alcohol

UN No.	Name and description	Class	Classification code	Packing group	Labels	Special provisions	Limited quantities	Packaging			Portable tanks and bulk containers	
								Packing instructions	Special packing provisions	Mixed packing provisions	Instructions	Special provisions
	3.1.2	2.2	2.2	2.1.1.3	5.2.2	3.3	3.4.6	4.1.4	4.1.4	4.1.10	4.2.5.2 7.3.2	4.2.5.3
(1)	(2)	(3a)	(3b)	(4)	(5)	(6)	(7)	(8)	(9a)	(9b)	(10)	(11)
1292	TETRAETHYL SILICATE	3	F1	III	3		LQ7	P001 IBC03 LP01 R001		MP19	T2	TP1
1293	TINCTURES, MEDICINAL	3	F1	II	3		LQ4	P001 IBC02 R001		MP19	T4	TP1 TP8
1293	TINCTURES, MEDICINAL	3	F1	III	3		LQ7	P001 IBC03 LP01 R001		MP19	T2	TP1
1294	TOLUENE	3	F1	II	3		LQ4	P001 IBC02 R001		MP19	T4	TP1
1295	TRICHLOROSILANE	4.3	WFC	I	4.3 +3 +8		LQ0	P401 PR2		MP2	T14	TP2 TP7
1296	TRIETHYLAMINE	3	FC	II	3 +8		LQ4	P001 IBC02		MP19	T7	TP1
1297	TRIMETHYLAMINE, AQUEOUS SOLUTION, not more than 50% trimethylamine, by mass	3	FC	I	3 +8		LQ3	P001		MP7 MP17	T11	TP1
1297	TRIMETHYLAMINE, AQUEOUS SOLUTION, not more than 50% trimethylamine, by mass	3	FC	II	3 +8		LQ4	P001 IBC02		MP19	T7	TP1
1297	TRIMETHYLAMINE, AQUEOUS SOLUTION, not more than 50% trimethylamine, by mass	3	FC	III	3 +8		LQ7	P001 IBC03 R001		MP19	T7	TP1
1298	TRIMETHYLCHLORO-SILANE	3	FC	II	3 +8		LQ4	P001 IBC02		MP19	T7	TP2
1299	TURPENTINE	3	F1	III	3		LQ7	P001 IBC03 LP01 R001		MP19	T2	TP1
1300	TURPENTINE SUBSTITUTE	3	F1	II	3		LQ4	P001 IBC02 R001		MP19	T4	TP1
1300	TURPENTINE SUBSTITUTE	3	F1	III	3		LQ7	P001 IBC03 LP01 R001		MP19	T2	TP1
1301	VINYL ACETATE, STABILIZED	3	F1	II	3		LQ4	P001 IBC02 R001		MP19	T4	TP1
1302	VINYL ETHYL ETHER, STABILIZED	3	F1	I	3		LQ3	P001		MP7 MP17	T11	TP2
1303	VINYLIDENE CHLORIDE, STABILIZED	3	F1	I	3		LQ3	P001		MP7 MP17	T12	TP2 TP7
1304	VINYL ISOBUTYL ETHER, STABILIZED	3	F1	II	3		LQ4	P001 IBC02 R001		MP19	T4	TP1
1305	VINYLTRICHLOROSILANE	3	FC	I	3 +8		LQ3	P001		MP7 MP17	T11	TP2
1306	WOOD PRESERVATIVES, LIQUID (vapour pressure at 50 °C more than 110 kPa but not more than 175 kPa)	3	F1	II	3	640C	LQ6	P001		MP19	T4	TP1 TP8
1306	WOOD PRESERVATIVES, LIQUID (vapour pressure at 50 °C not more than 110 kPa)	3	F1	II	3	640D	LQ6	P001 IBC02 R001		MP19	T4	TP1 TP8

ADR tank		Vehicle for tank carriage	Transport category	Special provisions for carriage				Hazard identification No.	UN No.	Name and description
Tank code	Special provisions			Packages	Bulk	Loading, unloading and handling	Operation			
4.3	4.3.5, 6.8.4	9.1.1.2	1.1.3.6	7.2.4	7.3.3	7.5.11	8.5	5.3.2.3		3.1.2
(12)	(13)	(14)	(15)	(16)	(17)	(18)	(19)	(20)	(1)	(2)
LGBF		FL	3				S2	30	1292	TETRAETHYL SILICATE
LGBF		FL	2				S2 S20	33	1293	TINCTURES, MEDICINAL
LGBF		FL	3				S2	30	1293	TINCTURES, MEDICINAL
LGBF		FL	2				S2 S20	33	1294	TOLUENE
L10DH	TU14 TU25 TE21 TM2 TM3	FL	0	V1		CV23	S2 S20	X338	1295	TRICHLOROSILANE
L4BH	TE15	FL	2				S2 S20	338	1296	TRIETHYLAMINE
L10CH	TU14 TE21	FL	1				S2 S20	338	1297	TRIMETHYLAMINE, AQUEOUS SOLUTION, not more than 50% trimethylamine, by mass
L4BH	TE15	FL	2				S2 S20	338	1297	TRIMETHYLAMINE, AQUEOUS SOLUTION, not more than 50% trimethylamine, by mass
L4BN		FL	3				S2	38	1297	TRIMETHYLAMINE, AQUEOUS SOLUTION, not more than 50% trimethylamine, by mass
L4BH	TE15	FL	2				S2 S20	X338	1298	TRIMETHYLCHLORO-SILANE
LGBF		FL	3				S2	30	1299	TURPENTINE
LGBF		FL	2				S2 S20	33	1300	TURPENTINE SUBSTITUTE
LGBF		FL	3				S2	30	1300	TURPENTINE SUBSTITUTE
LGBF		FL	2				S2 S20	339	1301	VINYL ACETATE, STABILIZED
L1.5BN		FL	1				S2 S20	339	1302	VINYL ETHYL ETHER, STABILIZED
L4BN		FL	1				S2 S20	339	1303	VINYLIDENE CHLORIDE, STABILIZED
LGBF		FL	2				S2 S20	339	1304	VINYL ISOBUTYL ETHER, STABILIZED
L10CH	TU14 TE21	FL	1				S2 S20	X338	1305	VINYLTRICHLOROSILANE
L1.5BN		FL	2				S2 S20	33	1306	WOOD PRESERVATIVES, LIQUID (vapour pressure at 50 °C more than 110 kPa but not more than 175 kPa)
LGBF		FL	2				S2 S20	33	1306	WOOD PRESERVATIVES, LIQUID (vapour pressure at 50 °C not more than 110 kPa)

UN No.	Name and description	Class	Classification code	Packing group	Labels	Special provisions	Limited quantities	Packaging			Portable tanks and bulk containers	
								Packing instructions	Special packing provisions	Mixed packing provisions	Instructions	Special provisions
	3.1.2	2.2	2.2	2.1.1.3	5.2.2	3.3	3.4.6	4.1.4	4.1.4	4.1.10	4.2.5.2 7.3.2	4.2.5.3
(1)	(2)	(3a)	(3b)	(4)	(5)	(6)	(7)	(8)	(9a)	(9b)	(10)	(11)
1306	WOOD PRESERVATIVES, LIQUID	3	F1	III	3	640E	LQ7	P001 IBC03 LP01 R001		MP19	T2	TP1
1306	WOOD PRESERVATIVES, LIQUID (having a flash-point below 23 °C and viscous according to 2.2.3.1.4) (vapour pressure at 50 °C more than 175 kPa)	3	F1	III	3	640F	LQ7	P001 LP01 R001		MP19	T2	TP1
1306	WOOD PRESERVATIVES, LIQUID (having a flash-point below 23 °C and viscous according to 2.2.3.1.4) (vapour pressure at 50 °C more than 110 kPa but not more than 175 kPa)	3	F1	III	3	640G	LQ7	P001 LP01 R001		MP19	T2	TP1
1306	WOOD PRESERVATIVES, LIQUID (having a flash-point below 23 °C and viscous according to 2.2.3.1.4) (vapour pressure at 50 °C not more than 110 kPa)	3	F1	III	3	640H	LQ7	P001 IBC02 LP01 R001		MP19	T2	TP1
1307	XYLENES	3	F1	II	3		LQ4	P001 IBC02 R001		MP19	T4	TP1
1307	XYLENES	3	F1	III	3		LQ7	P001 IBC03 LP01 R001		MP19	T2	TP1
1308	ZIRCONIUM SUSPENDED IN A FLAMMABLE LIQUID (vapour pressure at 50 °C more than 175 kPa)	3	F1	I	3	640A	LQ3	P001	PP33	MP7 MP17		
1308	ZIRCONIUM SUSPENDED IN A FLAMMABLE LIQUID (vapour pressure at 50 °C more than 110 kPa but not more than 175 kPa)	3	F1	I	3	640B	LQ3	P001	PP33	MP7 MP17		
1308	ZIRCONIUM SUSPENDED IN A FLAMMABLE LIQUID (vapour pressure at 50 °C more than 110 kPa but not more than 175 kPa)	3	F1	II	3	640C	LQ4	P001 R001	PP33	MP19		
1308	ZIRCONIUM SUSPENDED IN A FLAMMABLE LIQUID (vapour pressure at 50 °C not more than 110 kPa)	3	F1	II	3	640D	LQ4	P001 R001	PP33	MP19		
1308	ZIRCONIUM SUSPENDED IN A FLAMMABLE LIQUID	3	F1	III	3		LQ7	P001 R001		MP19		
1309	ALUMINIUM POWDER, COATED	4.1	F3	II	4.1		LQ8	P002 IBC08	PP38 B4	MP11	T3	TP33
1309	ALUMINIUM POWDER, COATED	4.1	F3	III	4.1		LQ9	P002 IBC08 LP02 R001	PP11 B3	MP11	T1	TP33
1310	AMMONIUM PICRATE, WETTED with not less than 10% water, by mass	4.1	D	I	4.1		LQ0	P406	PP26	MP2		

ADR tank		Vehicle for tank carriage	Transport category	Special provisions for carriage				Hazard identifi-cation No.	UN No.	Name and description
Tank code	Special provisions			Packages	Bulk	Loading, unloading and handling	Operation			
4.3	4.3.5, 6.8.4	9.1.1.2	1.1.3.6	7.2.4	7.3.3	7.5.11	8.5	5.3.2.3		3.1.2
(12)	(13)	(14)	(15)	(16)	(17)	(18)	(19)	(20)	(1)	(2)
LGBF		FL	3				S2	30	1306	WOOD PRESERVATIVES, LIQUID
L4BN		FL	3				S2	33	1306	WOOD PRESERVATIVES, LIQUID (having a flash-point below 23 °C and viscous according to 2.2.3.1.4) (vapour pressure at 50 °C more than 175 kPa)
L1.5BN		FL	3				S2	33	1306	WOOD PRESERVATIVES, LIQUID (having a flash-point below 23 °C and viscous according to 2.2.3.1.4) (vapour pressure at 50 °C more than 110 kPa but not more than 175 kPa)
LGBF		FL	3				S2	33	1306	WOOD PRESERVATIVES, LIQUID (having a flash-point below 23 °C and viscous according to 2.2.3.1.4) (vapour pressure at 50 °C not more than 110 kPa)
LGBF		FL	2				S2 S20	33	1307	XYLENES
LGBF		FL	3				S2	30	1307	XYLENES
L4BN		FL	1				S2 S20	33	1308	ZIRCONIUM SUSPENDED IN A FLAMMABLE LIQUID (vapour pressure at 50 °C more than 175 kPa)
L1.5BN		FL	1				S2 S20	33	1308	ZIRCONIUM SUSPENDED IN A FLAMMABLE LIQUID (vapour pressure at 50 °C more than 110 kPa but not more than 175 kPa)
L1.5BN		FL	2				S2 S20	33	1308	ZIRCONIUM SUSPENDED IN A FLAMMABLE LIQUID (vapour pressure at 50 °C more than 110 kPa but not more than 175 kPa)
LGBF		FL	2				S2 S20	33	1308	ZIRCONIUM SUSPENDED IN A FLAMMABLE LIQUID (vapour pressure at 50 °C not more than 110 kPa)
LGBF		FL	3				S2	30	1308	ZIRCONIUM SUSPENDED IN A FLAMMABLE LIQUID
SGAN		AT	2	V11				40	1309	ALUMINIUM POWDER, COATED
SGAV		AT	3		VV1			40	1309	ALUMINIUM POWDER, COATED
			1				S17		1310	AMMONIUM PICRATE, WETTED with not less than 10% water, by mass

UN No.	Name and description	Class	Classification code	Packing group	Labels	Special provisions	Limited quantities	Packaging			Portable tanks and bulk containers	
								Packing instructions	Special packing provisions	Mixed packing provisions	Instructions	Special provisions
	3.1.2	2.2	2.2	2.1.1.3	5.2.2	3.3	3.4.6	4.1.4	4.1.4	4.1.10	4.2.5.2 7.3.2	4.2.5.3
(1)	(2)	(3a)	(3b)	(4)	(5)	(6)	(7)	(8)	(9a)	(9b)	(10)	(11)
1312	BORNEOL	4.1	F1	III	4.1		LQ9	P002 IBC08 LP02 R001	B3	MP10	T1	TP33
1313	CALCIUM RESINATE	4.1	F3	III	4.1		LQ9	P002 IBC06 R001		MP11	T1	TP33
1314	CALCIUM RESINATE, FUSED	4.1	F3	III	4.1		LQ9	P002 IBC04 R001		MP11	T1	TP33
1318	COBALT RESINATE, PRECIPITATED	4.1	F3	III	4.1		LQ9	P002 IBC06 R001		MP11	T1	TP33
1320	DINITROPHENOL, WETTED with not less than 15% water, by mass	4.1	DT	I	4.1 +6.1		LQ0	P406	PP26	MP2		
1321	DINITROPHENOLATES, WETTED with not less than 15% water, by mass	4.1	DT	I	4.1 +6.1		LQ0	P406	PP26	MP2		
1322	DINITRORESORCINOL, WETTED with not less than 15% water, by mass	4.1	D	I	4.1		LQ0	P406	PP26	MP2		
1323	FERROCERIUM	4.1	F3	II	4.1	249	LQ8	P002 IBC08	B4	MP11	T3	TP33
1324	FILMS, NITROCELLULOSE BASE, gelatin coated, except scrap	4.1	F1	III	4.1		LQ9	P002 R001	PP15	MP11		
1325	FLAMMABLE SOLID, ORGANIC, N.O.S.	4.1	F1	II	4.1	274	LQ8	P002 IBC08	B4	MP10	T3	TP33
1325	FLAMMABLE SOLID, ORGANIC, N.O.S.	4.1	F1	III	4.1	274	LQ9	P002 IBC08 LP02 R001	B3	MP10	T1	TP33
1326	HAFNIUM POWDER, WETTED with not less than 25% water	4.1	F3	II	4.1	586	LQ8	P410 IBC06	PP40	MP11	T3	TP33
1327	Hay, Straw or Bhusa	4.1	F1		NOT SUBJECT TO ADR							
1328	HEXAMETHYLENE-TETRAMINE	4.1	F1	III	4.1		LQ9	P002 IBC08 R001	B3	MP10	T1	TP33
1330	MANGANESE RESINATE	4.1	F3	III	4.1		LQ9	P002 IBC06 R001		MP11	T1	TP33
1331	MATCHES, 'STRIKE ANYWHERE'	4.1	F1	III	4.1	293	LQ9	P407	PP27	MP12		
1332	METALDEHYDE	4.1	F1	III	4.1		LQ9	P002 IBC08 LP02 R001	B3	MP10	T1	TP33
1333	CERIUM, slabs, ingots or rods	4.1	F3	II	4.1		LQ8	P002 IBC08	B4	MP11	T3	TP33
1334	NAPHTHALENE, CRUDE or NAPHTHALENE, REFINED	4.1	F1	III	4.1	501	LQ9	P002 IBC08 LP02 R001	B3	MP10	T1 BK1 BK2	TP33
1336	NITROGUANIDINE (PICRITE), WETTED with not less than 20% water, by mass	4.1	D	I	4.1		LQ0	P406		MP2		
1337	NITROSTARCH, WETTED with not less than 20% water, by mass	4.1	D	I	4.1		LQ0	P406		MP2		
1338	PHOSPHORUS, AMORPHOUS	4.1	F3	III	4.1		LQ9	P410 IBC08 R001	B3	MP11	T1	TP33

ADR tank		Vehicle for tank carriage	Transport category	Special provisions for carriage				Hazard identification No.	UN No.	Name and description
Tank code	Special provisions			Packages	Bulk	Loading, unloading and handling	Operation			
4.3	4.3.5, 6.8.4	9.1.1.2	1.1.3.6	7.2.4	7.3.3	7.5.11	8.5	5.3.2.3		3.1.2
(12)	(13)	(14)	(15)	(16)	(17)	(18)	(19)	(20)	(1)	(2)
SGAV		AT	3		VV1			40	1312	BORNEOL
SGAV		AT	3	V12	VV1			40	1313	CALCIUM RESINATE
SGAV		AT	3		VV1			40	1314	CALCIUM RESINATE, FUSED
SGAV		AT	3	V12	VV1			40	1318	COBALT RESINATE, PRECIPITATED
			1			CV28	S17		1320	DINITROPHENOL, WETTED with not less than 15% water, by mass
			1			CV28	S17		1321	DINITROPHENOLATES, WETTED with not less than 15% water, by mass
			1				S17		1322	DINITRORESORCINOL, WETTED with not less than 15% water, by mass
SGAN		AT	2	V11				40	1323	FERROCERIUM
			3						1324	FILMS, NITROCELLULOSE BASE, gelatin coated, except scrap
SGAN		AT	2	V11				40	1325	FLAMMABLE SOLID, ORGANIC, N.O.S.
SGAV		AT	3		VV1			40	1325	FLAMMABLE SOLID, ORGANIC, N.O.S.
SGAN		AT	2	V11 V12				40	1326	HAFNIUM POWDER, WETTED with not less than 25% water
NOT SUBJECT TO ADR									1327	Hay, Straw or Bhusa
SGAV		AT	3		VV1			40	1328	HEXAMETHYLENE-TETRAMINE
SGAV		AT	3	V12	VV1			40	1330	MANGANESE RESINATE
			4						1331	MATCHES, 'STRIKE ANYWHERE'
SGAV		AT	3		VV1			40	1332	METALDEHYDE
			2	V11					1333	CERIUM, slabs, ingots or rods
SGAV		AT	3		VV2			40	1334	NAPHTHALENE, CRUDE or NAPHTHALENE, REFINED
			1				S17		1336	NITROGUANIDINE (PICRITE), WETTED with not less than 20% water, by mass
			1				S17		1337	NITROSTARCH, WETTED with not less than 20% water, by mass
SGAV		AT	3		VV1			40	1338	PHOSPHORUS, AMORPHOUS

UN No.	Name and description	Class	Classification code	Packing group	Labels	Special provisions	Limited quantities	Packaging			Portable tanks and bulk containers	
								Packing instructions	Special packing provisions	Mixed packing provisions	Instructions	Special provisions
	3.1.2	2.2	2.2	2.1.1.3	5.2.2	3.3	3.4.6	4.1.4	4.1.4	4.1.10	4.2.5.2 7.3.2	4.2.5.3
(1)	(2)	(3a)	(3b)	(4)	(5)	(6)	(7)	(8)	(9a)	(9b)	(10)	(11)
1339	PHOSPHORUS HEPTASULPHIDE, free from yellow and white phosphorus	4.1	F3	II	4.1	602	LQ8	P410 IBC04		MP11	T3	TP33
1340	PHOSPHORUS PENTASULPHIDE, free from yellow and white phosphorus	4.3	WF2	II	4.3 +4.1	602	LQ11	P410 IBC04		MP14	T3	TP33
1341	PHOSPHORUS SESQUISULPHIDE, free from yellow and white phosphorus	4.1	F3	II	4.1	602	LQ8	P410 IBC04		MP11	T3	TP33
1343	PHOSPHORUS TRISULPHIDE, free from yellow and white phosphorus	4.1	F3	II	4.1	602	LQ8	P410 IBC04		MP11	T3	TP33
1344	TRINITROPHENOL, WETTED with not less than 30% water, by mass	4.1	D	I	4.1		LQ0	P406	PP26	MP2		
1345	RUBBER SCRAP or RUBBER SHODDY, powdered or granulated	4.1	F1	II	4.1		LQ8	P002 IBC08	B4	MP11	T3	TP33
1346	SILICON POWDER, AMORPHOUS	4.1	F3	III	4.1	32	LQ9	P002 IBC08 LP02 R001	B3	MP11	T1	TP33
1347	SILVER PICRATE, WETTED with not less than 30% water, by mass	4.1	D	I	4.1		LQ0	P406	PP25 PP26	MP2		
1348	SODIUM DINITRO-o-CRESOLATE, WETTED with not less than 15% water, by mass	4.1	DT	I	4.1 +6.1		LQ0	P406	PP26	MP2		
1349	SODIUM PICRAMATE, WETTED with not less than 20% water, by mass	4.1	D	I	4.1		LQ0	P406	PP26	MP2		
1350	SULPHUR	4.1	F3	III	4.1	242	LQ9	P002 IBC08 LP02 R001	B3	MP11	T1 BK1 BK2	TP33
1352	TITANIUM POWDER, WETTED with not less than 25% water	4.1	F3	II	4.1	586	LQ8	P410 IBC06	PP40	MP11	T3	TP33
1353	FIBRES or FABRICS IMPREGNATED WITH WEAKLY NITRATED NITROCELLULOSE, N.O.S.	4.1	F1	III	4.1	274 502	LQ9	P410 IBC08 R001	B3	MP11		
1354	TRINITROBENZENE, WETTED with not less than 30% water, by mass	4.1	D	I	4.1		LQ0	P406		MP2		
1355	TRINITROBENZOIC ACID, WETTED with not less than 30% water, by mass	4.1	D	I	4.1		LQ0	P406		MP2		
1356	TRINITROTOLUENE (TNT), WETTED with not less than 30% water, by mass	4.1	D	I	4.1		LQ0	P406		MP2		
1357	UREA NITRATE, WETTED with not less than 20% water, by mass	4.1	D	I	4.1	227	LQ0	P406		MP2		
1358	ZIRCONIUM POWDER, WETTED with not less than 25% water	4.1	F3	II	4.1	586	LQ8	P410 IBC06	PP40	MP11	T3	TP33
1360	CALCIUM PHOSPHIDE	4.3	WT2	I	4.3 +6.1		LQ0	P403		MP2		

ADR tank		Vehicle for tank carriage	Transport category	Special provisions for carriage				Hazard identification No.	UN No.	Name and description
Tank code	Special provisions			Packages	Bulk	Loading, unloading and handling	Operation			
4.3	4.3.5, 6.8.4	9.1.1.2	1.1.3.6	7.2.4	7.3.3	7.5.11	8.5	5.3.2.3		3.1.2
(12)	(13)	(14)	(15)	(16)	(17)	(18)	(19)	(20)	(1)	(2)
SGAN		AT	2					40	1339	PHOSPHORUS HEPTASULPHIDE, free from yellow and white phosphorus
SGAN		AT	0	V1		CV23		423	1340	PHOSPHORUS PENTASULPHIDE, free from yellow and white phosphorus
SGAN		AT	2					40	1341	PHOSPHORUS SESQUISULPHIDE, free from yellow and white phosphorus
SGAN		AT	2					40	1343	PHOSPHORUS TRISULPHIDE, free from yellow and white phosphorus
			1				S17		1344	TRINITROPHENOL, WETTED with not less than 30% water, by mass
SGAN		AT	4	V11				40	1345	RUBBER SCRAP or RUBBER SHODDY, powdered or granulated
SGAV		AT	3		VV1			40	1346	SILICON POWDER, AMORPHOUS
			1				S17		1347	SILVER PICRATE, WETTED with not less than 30% water, by mass
			1			CV28	S17		1348	SODIUM DINITRO-o-CRESOLATE, WETTED with not less than 15% water, by mass
			1				S17		1349	SODIUM PICRAMATE, WETTED with not less than 20% water, by mass
SGAV		AT	3		VV1			40	1350	SULPHUR
SGAN		AT	2	V11 V12				40	1352	TITANIUM POWDER, WETTED with not less than 25% water
			3						1353	FIBRES or FABRICS IMPREGNATED WITH WEAKLY NITRATED NITROCELLULOSE, N.O.S.
			1				S17		1354	TRINITROBENZENE, WETTED with not less than 30% water, by mass
			1				S17		1355	TRINITROBENZOIC ACID, WETTED with not less than 30% water, by mass
			1				S17		1356	TRINITROTOLUENE (TNT), WETTED with not less than 30% water, by mass
			1				S17		1357	UREA NITRATE, WETTED with not less than 20% water, by mass
SGAN		AT	2	V11 V12				40	1358	ZIRCONIUM POWDER, WETTED with not less than 25% water
			1	V1		CV23 CV28	S20		1360	CALCIUM PHOSPHIDE

UN No.	Name and description	Class	Classification code	Packing group	Labels	Special provisions	Limited quantities	Packaging			Portable tanks and bulk containers	
								Packing instructions	Special packing provisions	Mixed packing provisions	Instructions	Special provisions
	3.1.2	2.2	2.2	2.1.1.3	5.2.2	3.3	3.4.6	4.1.4	4.1.4	4.1.10	4.2.5.2 7.3.2	4.2.5.3
(1)	(2)	(3a)	(3b)	(4)	(5)	(6)	(7)	(8)	(9a)	(9b)	(10)	(11)
1361	CARBON, animal or vegetable origin	4.2	S2	II	4.2		LQ0	P002 IBC06	PP12	MP14	T3	TP33
1361	CARBON, animal or vegetable origin	4.2	S2	III	4.2		LQ0	P002 IBC08 LP02 R001	PP12 B3	MP14	T1	TP33
1362	CARBON, ACTIVATED	4.2	S2	III	4.2	646	LQ0	P002 IBC08 LP02 R001	PP11 B3	MP14	T1	TP33
1363	COPRA	4.2	S2	III	4.2		LQ0	P003 IBC08 LP02 R001	PP20 B3 B6	MP14		
1364	COTTON WASTE, OILY	4.2	S2	III	4.2		LQ0	P003 IBC08 LP02 R001	PP19 B3 B6	MP14		
1365	COTTON, WET	4.2	S2	III	4.2		LQ0	P003 IBC08 LP02 R001	PP19 B3 B6	MP14		
1366	DIETHYLZINC	4.2	SW	I	4.2 +4.3	320	LQ0	P400 PR1		MP2	T21	TP2 TP7
1369	p-NITROSODIMETHYL-ANILINE	4.2	S2	II	4.2		LQ0	P410 IBC06		MP14	T3	TP33
1370	DIMETHYLZINC	4.2	SW	I	4.2 +4.3	320	LQ0	P400 PR1		MP2	T21	TP2 TP7
1372	Fibres, animal or fibres, vegetable burnt, wet or damp	4.2	S2	NOT SUBJECT TO ADR								
1373	FIBRES or FABRICS, ANIMAL or VEGETABLE or SYNTHETIC, N.O.S. with oil	4.2	S2	III	4.2	274	LQ0	P410 IBC08 R001	B3	MP14	T1	TP33
1374	FISH MEAL (FISH SCRAP), UNSTABILIZED	4.2	S2	II	4.2	300	LQ0	P410 IBC08	B4	MP14	T3	TP33
1376	IRON OXIDE, SPENT or IRON SPONGE, SPENT obtained from coal gas purification	4.2	S4	III	4.2	592	LQ0	P002 IBC08 LP02 R001	B3	MP14	T1 BK2	TP33
1378	METAL CATALYST, WETTED with a visible excess of liquid	4.2	S4	II	4.2	274	LQ0	P410 IBC01	PP39	MP14	T3	TP33
1379	PAPER, UNSATURATED OIL TREATED, incompletely dried (including carbon paper)	4.2	S2	III	4.2		LQ0	P410 IBC08 R001	B3	MP14		
1380	PENTABORANE	4.2	ST3	I	4.2 +6.1		LQ0	P601 PR1		MP2		
1381	PHOSPHORUS, WHITE or YELLOW, UNDER WATER or IN SOLUTION	4.2	ST3	I	4.2 +6.1	503	LQ0	P405		MP2	T9	TP3 TP31
1381	PHOSPHORUS, WHITE or YELLOW, DRY	4.2	ST4	I	4.2 +6.1	503	LQ0	P405		MP2	T9	TP3 TP31
1382	POTASSIUM SULPHIDE, ANHYDROUS or POTASSIUM SULPHIDE with less than 30% water of crystallization	4.2	S4	II	4.2	504	LQ0	P410 IBC06		MP14	T3	TP33
1383	PYROPHORIC METAL, N.O.S. or PYROPHORIC ALLOY, N.O.S.	4.2	S4	I	4.2	274	LQ0	P404		MP13	T21	TP7 TP9 TP33

ADR tank		Vehicle for tank carriage	Transport category	Special provisions for carriage				Hazard identification No.	UN No.	Name and description
Tank code	Special provisions			Packages	Bulk	Loading, unloading and handling	Operation			
4.3	4.3.5, 6.8.4	9.1.1.2	1.1.3.6	7.2.4	7.3.3	7.5.11	8.5	5.3.2.3		3.1.2
(12)	(13)	(14)	(15)	(16)	(17)	(18)	(19)	(20)	(1)	(2)
SGAN	TU11	AT	2	V1 V12 V13				40	1361	CARBON, animal or vegetable origin
SGAV		AT	4	V1 V13	VV4			40	1361	CARBON, animal or vegetable origin
SGAV		AT	4	V1	VV4			40	1362	CARBON, ACTIVATED
			3	V1	VV4			40	1363	COPRA
			3	V1	VV4			40	1364	COTTON WASTE, OILY
			3	V1	VV4			40	1365	COTTON, WET
L21DH	TU4 TU14 TU22 TC1 TE21 TM1	AT	0	V1			S20	X333	1366	DIETHYLZINC
SGAN		AT	2	V1 V12				40	1369	p-NITROSODIMETHYL-ANILINE
L21DH	TU4 TU14 TU22 TC1 TE21 TM1	AT	0	V1			S20	X333	1370	DIMETHYLZINC
NOT SUBJECT TO ADR									1372	Fibres, animal or fibres, vegetable burnt, wet or damp
			3	V1	VV4			40	1373	FIBRES or FABRICS, ANIMAL or VEGETABLE or SYNTHETIC, N.O.S. with oil
		AT	2	V1				40	1374	FISH MEAL (FISH SCRAP), UNSTABILIZED
SGAV		AT	3	V1	VV4			40	1376	IRON OXIDE, SPENT or IRON SPONGE, SPENT obtained from coal gas purification
SGAN		AT	2	V1				40	1378	METAL CATALYST, WETTED with a visible excess of liquid
			3	V1	VV4			40	1379	PAPER, UNSATURATED OIL TREATED, incompletely dried (including carbon paper)
L21DH	TU14 TC1 TE21 TM1	AT	0	V1		CV28	S20	333	1380	PENTABORANE
L10DH(+)	TU14 TU16 TU21 TE3 TE21	AT	0	V1		CV28	S20	46	1381	PHOSPHORUS, WHITE or YELLOW, UNDER WATER or IN SOLUTION
L10DH(+)	TU14 TU16 TU21 TE3 TE21	AT	0	V1		CV28	S20	46	1381	PHOSPHORUS, WHITE or YELLOW, DRY
SGAN		AT	2	V1 V12				40	1382	POTASSIUM SULPHIDE, ANHYDROUS or POTASSIUM SULPHIDE with less than 30% water of crystallization
		AT	0	V1			S20	43	1383	PYROPHORIC METAL, N.O.S. or PYROPHORIC ALLOY, N.O.S.

UN No.	Name and description	Class	Classification code	Packing group	Labels	Special provisions	Limited quantities	Packaging			Portable tanks and bulk containers	
								Packing instructions	Special packing provisions	Mixed packing provisions	Instructions	Special provisions
	3.1.2	2.2	2.2	2.1.1.3	5.2.2	3.3	3.4.6	4.1.4	4.1.4	4.1.10	4.2.5.2 7.3.2	4.2.5.3
(1)	(2)	(3a)	(3b)	(4)	(5)	(6)	(7)	(8)	(9a)	(9b)	(10)	(11)
1384	SODIUM DITHIONITE (SODIUM HYDROSULPHITE)	4.2	S4	II	4.2		LQ0	P410 IBC06		MP14	T3	TP33
1385	SODIUM SULPHIDE, ANHYDROUS or SODIUM SULPHIDE with less than 30% water of crystallization	4.2	S4	II	4.2	504	LQ0	P410 IBC06		MP14	T3	TP33
1386	SEED CAKE with more than 1.5% oil and not more than 11% moisture	4.2	S2	III	4.2		LQ0	P003 IBC08 LP02 R001	PP20 B3 B6	MP14		
1387	Wool waste, wet	4.2	S2	NOT SUBJECT TO ADR								
1389	ALKALI METAL AMALGAM, LIQUID	4.3	W1	I	4.3	182 274	LQ0	P402 PR1		MP2		
1390	ALKALI METAL AMIDES	4.3	W2	II	4.3	182 274 505	LQ11	P410 IBC07		MP14	T3	TP33
1391	ALKALI METAL DISPERSION or ALKALINE EARTH METAL DISPERSION	4.3	W1	I	4.3	182 183 274 282 506	LQ0	P402 PR1		MP2		
1392	ALKALINE EARTH METAL AMALGAM, LIQUID	4.3	W1	I	4.3	183 274 506	LQ0	P402		MP2		
1393	ALKALINE EARTH METAL ALLOY, N.O.S.	4.3	W2	II	4.3	183 274 506	LQ11	P410 IBC07		MP15	T3	TP33
1394	ALUMINIUM CARBIDE	4.3	W2	II	4.3		LQ11	P410 IBC07		MP14	T3	TP33
1395	ALUMINIUM FERROSILICON POWDER	4.3	WT2	II	4.3 +6.1		LQ11	P410 IBC05	PP40	MP14	T3	TP33
1396	ALUMINIUM POWDER, UNCOATED	4.3	W2	II	4.3		LQ12	P410 IBC07	PP40	MP14	T3	TP33
1396	ALUMINIUM POWDER, UNCOATED	4.3	W2	III	4.3		LQ12	P410 IBC08 R001	B4	MP14	T1	TP33
1397	ALUMINIUM PHOSPHIDE	4.3	WT2	I	4.3 +6.1	507	LQ0	P403		MP2		
1398	ALUMINIUM SILICON POWDER, UNCOATED	4.3	W2	III	4.3	37	LQ12	P410 IBC08 R001	B4	MP14	T1	TP33
1400	BARIUM	4.3	W2	II	4.3		LQ11	P410 IBC07		MP14	T3	TP33
1401	CALCIUM	4.3	W2	II	4.3		LQ11	P410 IBC07		MP14	T3	TP33
1402	CALCIUM CARBIDE	4.3	W2	I	4.3		LQ0	P403 IBC04		MP2	T9	TP7 TP33
1402	CALCIUM CARBIDE	4.3	W2	II	4.3		LQ11	P410 IBC07		MP14	T3	TP33
1403	CALCIUM CYANAMIDE with more than 0.1% calcium carbide	4.3	W2	III	4.3	38	LQ12	P410 IBC08 R001	B4	MP14	T1	TP33
1404	CALCIUM HYDRIDE	4.3	W2	I	4.3		LQ0	P403		MP2		
1405	CALCIUM SILICIDE	4.3	W2	II	4.3		LQ11	P410 IBC07		MP14	T3	TP33
1405	CALCIUM SILICIDE	4.3	W2	III	4.3		LQ12	P410 IBC08 R001	B4	MP14	T1	TP33
1407	CAESIUM	4.3	W2	I	4.3		LQ0	P403 IBC04		MP2		
1408	FERROSILICON with 30% or more but less than 90% silicon	4.3	WT2	III	4.3 +6.1	39	LQ12	P003 IBC08 R001	PP20 B4, B6	MP14	T1 BK2	TP33

ADR tank		Vehicle for tank carriage	Transport category	Special provisions for carriage				Hazard identifi-cation No.	UN No.	Name and description
Tank code	Special provisions			Packages	Bulk	Loading, unloading and handling	Operation			
4.3	4.3.5, 6.8.4	9.1.1.2	1.1.3.6	7.2.4	7.3.3	7.5.11	8.5	5.3.2.3		3.1.2
(12)	(13)	(14)	(15)	(16)	(17)	(18)	(19)	(20)	(1)	(2)
SGAN		AT	2	V1 V12				40	1384	SODIUM DITHIONITE (SODIUM HYDROSULPHITE)
SGAN		AT	2	V1 V12				40	1385	SODIUM SULPHIDE, ANHYDROUS or SODIUM SULPHIDE with less than 30% water of crystallization
			3	V1	VV4			40	1386	SEED CAKE with more than 1.5% oil and not more than 11% moisture
NOT SUBJECT TO ADR									1387	Wool waste, wet
L10BN(+)	TU1 TE5 TT3 TM2	AT	1	V1		CV23	S20	X323	1389	ALKALI METAL AMALGAM, LIQUID
SGAN		AT	0	V1 V12		CV23		423	1390	ALKALI METAL AMIDES
L10BN(+)	TU1 TE5 TT3 TM2	AT	1	V1		CV23	S20	X323	1391	ALKALI METAL DISPERSION or ALKALINE EARTH METAL DISPERSION
L10BN(+)	TU1 TE5 TT3 TM2	AT	1	V1		CV23	S20	X323	1392	ALKALINE EARTH METAL AMALGAM, LIQUID
SGAN		AT	2	V1 V12		CV23		423	1393	ALKALINE EARTH METAL ALLOY, N.O.S.
SGAN		AT	2	V1 V12	VV5	CV23		423	1394	ALUMINIUM CARBIDE
SGAN		AT	2	V1		CV23 CV28		462	1395	ALUMINIUM FERROSILICON POWDER
SGAN		AT	2	V1 V12		CV23		423	1396	ALUMINIUM POWDER, UNCOATED
SGAN		AT	3	V1	VV5	CV23		423	1396	ALUMINIUM POWDER, UNCOATED
			1	V1		CV23 CV28	S20		1397	ALUMINIUM PHOSPHIDE
SGAN		AT	3	V1	VV5	CV23		423	1398	ALUMINIUM SILICON POWDER, UNCOATED
SGAN		AT	2	V1 V12		CV23		423	1400	BARIUM
SGAN		AT	2	V1 V12		CV23		423	1401	CALCIUM
		AT	1	V1		CV23	S20	X423	1402	CALCIUM CARBIDE
SGAN		AT	2	V1 V12	VV5	CV23		423	1402	CALCIUM CARBIDE
SGAN		AT	0	V1		CV23		423	1403	CALCIUM CYANAMIDE with more than 0.1% calcium carbide
			1	V1		CV23	S20		1404	CALCIUM HYDRIDE
SGAN		AT	2	V1 V12	VV7	CV23		423	1405	CALCIUM SILICIDE
SGAN		AT	3	V1	VV5 VV7	CV23		423	1405	CALCIUM SILICIDE
L10CH(+)	TU2 TU14 TE5 TE21 TT3 TM2	AT	1	V1		CV23	S20	X423	1407	CAESIUM
SGAN		AT	3	V1	VV1	CV23 CV28		462	1408	FERROSILICON with 30% or more but less than 90% silicon

UN No.	Name and description	Class	Classification code	Packing group	Labels	Special provisions	Limited quantities	Packaging			Portable tanks and bulk containers	
								Packing instructions	Special packing provisions	Mixed packing provisions	Instructions	Special provisions
	3.1.2	2.2	2.2	2.1.1.3	5.2.2	3.3	3.4.6	4.1.4	4.1.4	4.1.10	4.2.5.2 7.3.2	4.2.5.3
(1)	(2)	(3a)	(3b)	(4)	(5)	(6)	(7)	(8)	(9a)	(9b)	(10)	(11)
1409	METAL HYDRIDES, WATER-REACTIVE, N.O.S.	4.3	W2	I	4.3	274 508	LQ0	P403		MP2		
1409	METAL HYDRIDES, WATER-REACTIVE, N.O.S.	4.3	W2	II	4.3	274 508	LQ11	P410 IBC04		MP14	T3	TP33
1410	LITHIUM ALUMINIUM HYDRIDE	4.3	W2	I	4.3		LQ0	P403		MP2		
1411	LITHIUM ALUMINIUM HYDRIDE, ETHEREAL	4.3	WF1	I	4.3 +3		LQ0	P402 PR1		MP2		
1413	LITHIUM BOROHYDRIDE	4.3	W2	I	4.3		LQ0	P403		MP2		
1414	LITHIUM HYDRIDE	4.3	W2	I	4.3		LQ0	P403		MP2		
1415	LITHIUM	4.3	W2	I	4.3		LQ0	P403 IBC04		MP2		
1417	LITHIUM SILICON	4.3	W2	II	4.3		LQ11	P410 IBC07		MP14	T3	TP33
1418	MAGNESIUM POWDER or MAGNESIUM ALLOYS POWDER	4.3	WS	I	4.3 +4.2		LQ0	P403		MP2		
1418	MAGNESIUM POWDER or MAGNESIUM ALLOYS POWDER	4.3	WS	II	4.3 +4.2		LQ11	P410 IBC05		MP14	T3	TP33
1418	MAGNESIUM POWDER or MAGNESIUM ALLOYS POWDER	4.3	WS	III	4.3 +4.2		LQ12	P410 IBC08 R001	B4	MP14	T1	TP33
1419	MAGNESIUM ALUMINIUM PHOSPHIDE	4.3	WT2	I	4.3 +6.1		LQ0	P403		MP2		
1420	POTASSIUM METAL ALLOYS, LIQUID	4.3	W1	I	4.3		LQ0	P402		MP2		
1421	ALKALI METAL ALLOY, LIQUID, N.O.S.	4.3	W1	I	4.3	182 274	LQ0	P402 PR1		MP2		
1422	POTASSIUM SODIUM ALLOYS, LIQUID	4.3	W1	I	4.3		LQ0	P402		MP2	T9	TP3 TP7 TP31
1423	RUBIDIUM	4.3	W2	I	4.3		LQ0	P403 IBC04		MP2		
1426	SODIUM BOROHYDRIDE	4.3	W2	I	4.3		LQ0	P403		MP2		
1427	SODIUM HYDRIDE	4.3	W2	I	4.3		LQ0	P403		MP2		
1428	SODIUM	4.3	W2	I	4.3		LQ0	P403 IBC04		MP2	T9	TP7 TP33
1431	SODIUM METHYLATE	4.2	SC4	II	4.2 +8		LQ0	P410 IBC05		MP14	T3	TP33
1432	SODIUM PHOSPHIDE	4.3	WT2	I	4.3 +6.1		LQ0	P403		MP2		
1433	STANNIC PHOSPHIDES	4.3	WT2	I	4.3 +6.1		LQ0	P403		MP2		
1435	ZINC ASHES	4.3	W2	III	4.3		LQ12	P002 IBC08 R001	B4	MP14	T1	TP33
1436	ZINC POWDER or ZINC DUST	4.3	WS	I	4.3 +4.2		LQ0	P403		MP2		
1436	ZINC POWDER or ZINC DUST	4.3	WS	II	4.3 +4.2		LQ11	P410 IBC07	PP40		T3	TP33
1436	ZINC POWDER or ZINC DUST	4.3	WS	III	4.3 +4.2		LQ12	P410 IBC08 R001	B4	MP14	T1	TP33
1437	ZIRCONIUM HYDRIDE	4.1	F3	II	4.1		LQ8	P410 IBC04	PP40	MP11	T3	TP33
1438	ALUMINIUM NITRATE	5.1	O2	III	5.1		LQ12	P002 IBC08 LP02 R001	B3	MP10	T1 BK1 BK2	TP33

ADR tank		Vehicle for tank carriage	Transport category	Special provisions for carriage				Hazard identifi-cation No.	UN No.	Name and description
Tank code	Special provisions			Packages	Bulk	Loading, unloading and handling	Operation			
4.3	4.3.5, 6.8.4	9.1.1.2	1.1.3.6	7.2.4	7.3.3	7.5.11	8.5	5.3.2.3		3.1.2
(12)	(13)	(14)	(15)	(16)	(17)	(18)	(19)	(20)	(1)	(2)
			1	V1		CV23	S20		1409	METAL HYDRIDES, WATER-REACTIVE, N.O.S.
SGAN		AT	2	V1		CV23		423	1409	METAL HYDRIDES, WATER-REACTIVE, N.O.S.
			1	V1		CV23	S20		1410	LITHIUM ALUMINIUM HYDRIDE
			1	V1		CV23	S2 S20		1411	LITHIUM ALUMINIUM HYDRIDE, ETHEREAL
			1	V1		CV23	S20		1413	LITHIUM BOROHYDRIDE
			1	V1		CV23	S20		1414	LITHIUM HYDRIDE
L10BN(+)	TU1 TE5 TT3 TM2	AT	1	V1		CV23	S20	X423	1415	LITHIUM
SGAN		AT	2	V1 V12		CV23		423	1417	LITHIUM SILICON
			1	V1		CV23	S20		1418	MAGNESIUM POWDER or MAGNESIUM ALLOYS POWDER
SGAN		AT	2	V1		CV23		423	1418	MAGNESIUM POWDER or MAGNESIUM ALLOYS POWDER
SGAN		AT	3	V1	VV5	CV23		423	1418	MAGNESIUM POWDER or MAGNESIUM ALLOYS POWDER
			1	V1		CV23 CV28	S20		1419	MAGNESIUM ALUMINIUM PHOSPHIDE
L10BN(+)	TU1 TE5 TT3 TM2	AT	1	V1		CV23	S20	X323	1420	POTASSIUM METAL ALLOYS, LIQUID
L10BN(+)	TU1 TE5 TT3 TM2	AT	1	V1		CV23	S20	X323	1421	ALKALI METAL ALLOY, LIQUID, N.O.S.
L10BN(+)	TU1 TE5 TT3 TM2	AT	1	V1		CV23	S20	X323	1422	POTASSIUM SODIUM ALLOYS, LIQUID
L10CH(+)	TU2 TU14 TE5 TE21 TT3 TM2	AT	1	V1		CV23	S20	X423	1423	RUBIDIUM
			1	V1		CV23	S20		1426	SODIUM BOROHYDRIDE
			1	V1		CV23	S20		1427	SODIUM HYDRIDE
L10BN(+)	TU1 TE5 TT3 TM2	AT	1	V1		CV23	S20	X423	1428	SODIUM
SGAN		AT	2	V1				48	1431	SODIUM METHYLATE
			1	V1		CV23 CV28	S20		1432	SODIUM PHOSPHIDE
			1	V1		CV23 CV28	S20		1433	STANNIC PHOSPHIDES
SGAN		AT	3	V1	VV5	CV23		423	1435	ZINC ASHES
			1	V1		CV23	S20		1436	ZINC POWDER or ZINC DUST
SGAN		AT	2	V1 V12		CV23		423	1436	ZINC POWDER or ZINC DUST
SGAN		AT	3	V1	VV5	CV23		423	1436	ZINC POWDER or ZINC DUST
SGAN		AT	2					40	1437	ZIRCONIUM HYDRIDE
SGAV	TU3	AT	3		VV8	CV24		50	1438	ALUMINIUM NITRATE

UN No.	Name and description	Class	Classification code	Packing group	Labels	Special provisions	Limited quantities	Packaging			Portable tanks and bulk containers	
								Packing instructions	Special packing provisions	Mixed packing provisions	Instructions	Special provisions
	3.1.2	2.2	2.2	2.1.1.3	5.2.2	3.3	3.4.6	4.1.4	4.1.4	4.1.10	4.2.5.2 7.3.2	4.2.5.3
(1)	(2)	(3a)	(3b)	(4)	(5)	(6)	(7)	(8)	(9a)	(9b)	(10)	(11)
1439	AMMONIUM DICHROMATE	5.1	O2	II	5.1		LQ11	P002 IBC08	B4	MP2	T3	TP33
1442	AMMONIUM PERCHLORATE	5.1	O2	II	5.1	152	LQ11	P002 IBC06		MP2	T3	TP33
1444	AMMONIUM PERSULPHATE	5.1	O2	III	5.1		LQ12	P002 IBC08 LP02 R001	B3	MP10	T1	TP33
1445	BARIUM CHLORATE, SOLID	5.1	OT2	II	5.1 +6.1		LQ11	P002 IBC06		MP2	T3	TP33
1446	BARIUM NITRATE	5.1	OT2	II	5.1 +6.1		LQ11	P002 IBC08	B4	MP2	T3	TP33
1447	BARIUM PERCHLORATE, SOLID	5.1	OT2	II	5.1 +6.1		LQ11	P002 IBC06		MP2	T3	TP33
1448	BARIUM PERMANGANATE	5.1	OT2	II	5.1 +6.1		LQ11	P002 IBC06		MP2	T3	TP33
1449	BARIUM PEROXIDE	5.1	OT2	II	5.1 +6.1		LQ11	P002 IBC06		MP2	T3	TP33
1450	BROMATES, INORGANIC, N.O.S.	5.1	O2	II	5.1	274 604	LQ11	P002 IBC08	B4	MP2	T3	TP33
1451	CAESIUM NITRATE	5.1	O2	III	5.1		LQ12	P002 IBC08 LP02 R001	B3	MP10	T1	TP33
1452	CALCIUM CHLORATE	5.1	O2	II	5.1		LQ11	P002 IBC08	B4	MP2	T3	TP33
1453	CALCIUM CHLORITE	5.1	O2	II	5.1		LQ11	P002 IBC08	B4	MP2	T3	TP33
1454	CALCIUM NITRATE	5.1	O2	III	5.1	208	LQ12	P002 IBC08 LP02 R001	B3	MP10	T1 BK1 BK2	TP33
1455	CALCIUM PERCHLORATE	5.1	O2	II	5.1		LQ11	P002 IBC06		MP2	T3	TP33
1456	CALCIUM PERMANGANATE	5.1	O2	II	5.1		LQ11	P002 IBC06		MP2	T3	TP33
1457	CALCIUM PEROXIDE	5.1	O2	II	5.1		LQ11	P002 IBC06		MP2	T3	TP33
1458	CHLORATE AND BORATE MIXTURE	5.1	O2	II	5.1		LQ11	P002 IBC08	B4	MP2	T3	TP33
1458	CHLORATE AND BORATE MIXTURE	5.1	O2	III	5.1		LQ12	P002 IBC08 LP02 R001	B3	MP2	T1	TP33
1459	CHLORATE AND MAGNESIUM CHLORIDE MIXTURE, SOLID	5.1	O2	II	5.1		LQ11	P002 IBC08	B4	MP2	T3	TP33
1459	CHLORATE AND MAGNESIUM CHLORIDE MIXTURE, SOLID	5.1	O2	III	5.1		LQ12	P002 IBC08 LP02 R001	B3	MP2	T1	TP33
1461	CHLORATES, INORGANIC, N.O.S.	5.1	O2	II	5.1	274 605	LQ11	P002 IBC06		MP2	T3	TP33
1462	CHLORITES, INORGANIC, N.O.S.	5.1	O2	II	5.1	274 509 606	LQ11	P002 IBC06		MP2	T3	TP33
1463	CHROMIUM TRIOXIDE, ANHYDROUS	5.1	OC2	II	5.1 +8	510	LQ11	P002 IBC08	B4	MP2	T3	TP33
1465	DIDYMIUM NITRATE	5.1	O2	III	5.1		LQ12	P002 IBC08 LP02 R001	B3	MP10	T1	TP33
1466	FERRIC NITRATE	5.1	O2	III	5.1		LQ12	P002 IBC08 LP02 R001	B3	MP10	T1	TP33

ADR tank		Vehicle for tank carriage	Transport category	Special provisions for carriage				Hazard identifi-cation No.	UN No.	Name and description
Tank code	Special provisions			Packages	Bulk	Loading, unloading and handling	Operation			
4.3	4.3.5, 6.8.4	9.1.1.2	1.1.3.6	7.2.4	7.3.3	7.5.11	8.5	5.3.2.3		3.1.2
(12)	(13)	(14)	(15)	(16)	(17)	(18)	(19)	(20)	(1)	(2)
SGAN	TU3	AT	2	V11		CV24		50	1439	AMMONIUM DICHROMATE
			2	V6 V11 V12	VV8	CV24		50	1442	AMMONIUM PERCHLORATE
SGAV	TU3	AT	3		VV8	CV24		50	1444	AMMONIUM PERSULPHATE
SGAN	TU3	AT	2	V11 V12		CV24 CV28		56	1445	BARIUM CHLORATE, SOLID
SGAN	TU3	AT	2	V11		CV24 CV28		56	1446	BARIUM NITRATE
SGAN	TU3	AT	2	V11 V12		CV24 CV28		56	1447	BARIUM PERCHLORATE, SOLID
SGAN	TU3	AT	2	V11 V12		CV24 CV28		56	1448	BARIUM PERMANGANATE
SGAN	TU3	AT	2	V11 V12		CV24 CV28		56	1449	BARIUM PEROXIDE
SGAV	TU3	AT	2	V11	VV8	CV24		50	1450	BROMATES, INORGANIC, N.O.S.
SGAV	TU3	AT	3		VV8	CV24		50	1451	CAESIUM NITRATE
SGAV	TU3	AT	2	V11	VV8	CV24		50	1452	CALCIUM CHLORATE
SGAN	TU3	AT	2	V11		CV24		50	1453	CALCIUM CHLORITE
SGAV	TU3	AT	3		VV8	CV24		50	1454	CALCIUM NITRATE
SGAV	TU3	AT	2	V11 V12	VV8	CV24		50	1455	CALCIUM PERCHLORATE
SGAN	TU3	AT	2	V11 V12		CV24		50	1456	CALCIUM PERMANGANATE
SGAN	TU3	AT	2	V11 V12		CV24		50	1457	CALCIUM PEROXIDE
SGAV	TU3	AT	2	V11	VV8	CV24		50	1458	CHLORATE AND BORATE MIXTURE
SGAV	TU3	AT	3		VV8	CV24		50	1458	CHLORATE AND BORATE MIXTURE
SGAV	TU3	AT	2	V11	VV8	CV24		50	1459	CHLORATE AND MAGNESIUM CHLORIDE MIXTURE, SOLID
SGAV	TU3	AT	3		VV8	CV24		50	1459	CHLORATE AND MAGNESIUM CHLORIDE MIXTURE, SOLID
SGAV	TU3	AT	2	V11 V12	VV8	CV24		50	1461	CHLORATES, INORGANIC, N.O.S.
SGAN	TU3	AT	2	V11 V12		CV24		50	1462	CHLORITES, INORGANIC, N.O.S.
SGAN	TU3	AT	2			CV24		58	1463	CHROMIUM TRIOXIDE, ANHYDROUS
SGAV	TU3	AT	3		VV8	CV24		50	1465	DIDYMIUM NITRATE
SGAV	TU3	AT	3		VV8	CV24		50	1466	FERRIC NITRATE

UN No.	Name and description	Class	Classification code	Packing group	Labels	Special provisions	Limited quantities	Packaging			Portable tanks and bulk containers	
								Packing instructions	Special packing provisions	Mixed packing provisions	Instructions	Special provisions
	3.1.2	2.2	2.2	2.1.1.3	5.2.2	3.3	3.4.6	4.1.4	4.1.4	4.1.10	4.2.5.2 7.3.2	4.2.5.3
(1)	(2)	(3a)	(3b)	(4)	(5)	(6)	(7)	(8)	(9a)	(9b)	(10)	(11)
1467	GUANIDINE NITRATE	5.1	O2	III	5.1		LQ12	P002 IBC08 LP02 R001	B3	MP10	T1	TP33
1469	LEAD NITRATE	5.1	OT2	II	5.1 +6.1		LQ11	P002 IBC08	B4	MP2	T3	TP33
1470	LEAD PERCHLORATE, SOLID	5.1	OT2	II	5.1 +6.1		LQ11	P002 IBC06		MP2	T3	TP33
1471	LITHIUM HYPOCHLORITE, DRY or LITHIUM HYPOCHLORITE MIXTURE	5.1	O2	II	5.1		LQ11	P002 IBC08	B4	MP10		
1472	LITHIUM PEROXIDE	5.1	O2	II	5.1		LQ11	P002 IBC06		MP2	T3	TP33
1473	MAGNESIUM BROMATE	5.1	O2	II	5.1		LQ11	P002 IBC08	B4	MP2	T3	TP33
1474	MAGNESIUM NITRATE	5.1	O2	III	5.1		LQ12	P002 IBC08 LP02 R001	B3	MP10	T1 BK1 BK2	TP33
1475	MAGNESIUM PERCHLORATE	5.1	O2	II	5.1		LQ11	P002 IBC06		MP2	T3	TP33
1476	MAGNESIUM PEROXIDE	5.1	O2	II	5.1		LQ11	P002 IBC06		MP2	T3	TP33
1477	NITRATES, INORGANIC, N.O.S.	5.1	O2	II	5.1	274 511	LQ11	P002 IBC08	B4	MP10	T3	TP33
1477	NITRATES, INORGANIC, N.O.S.	5.1	O2	III	5.1	274 511	LQ12	P002 IBC08 LP02 R001	B3	MP10	T1	TP33
1479	OXIDIZING SOLID, N.O.S.	5.1	O2	I	5.1	274	LQ0	P503 IBC05		MP2		
1479	OXIDIZING SOLID, N.O.S.	5.1	O2	II	5.1	274	LQ11	P002 IBC08	B4	MP2	T3	TP33
1479	OXIDIZING SOLID, N.O.S.	5.1	O2	III	5.1	274	LQ12	P002 IBC08 LP02 R001	B3	MP2	T1	TP33
1481	PERCHLORATES, INORGANIC, N.O.S.	5.1	O2	II	5.1	274	LQ11	P002 IBC06		MP2	T3	TP33
1481	PERCHLORATES, INORGANIC, N.O.S.	5.1	O2	III	5.1	274	LQ12	P002 IBC08 LP02 R001	B3	MP2	T1	TP33
1482	PERMANGANATES, INORGANIC, N.O.S.	5.1	O2	II	5.1	274 608	LQ11	P002 IBC06		MP2	T3	TP33
1482	PERMANGANATES, INORGANIC, N.O.S.	5.1	O2	III	5.1	274 608	LQ12	P002 IBC08 LP02 R001	B3	MP2	T1	TP33
1483	PEROXIDES, INORGANIC, N.O.S.	5.1	O2	II	5.1	274	LQ11	P002 IBC06		MP2	T3	TP33
1483	PEROXIDES, INORGANIC, N.O.S.	5.1	O2	III	5.1	274	LQ12	P002 IBC08 LP02 R001	B3	MP2	T1	TP33
1484	POTASSIUM BROMATE	5.1	O2	II	5.1		LQ11	P002 IBC08	B4	MP2	T3	TP33
1485	POTASSIUM CHLORATE	5.1	O2	II	5.1		LQ11	P002 IBC08	B4	MP2	T3	TP33
1486	POTASSIUM NITRATE	5.1	O2	III	5.1		LQ12	P002 IBC08 LP02 R001	B3	MP10	T1 BK1 BK2	TP33

ADR tank		Vehicle for tank carriage	Transport category	Special provisions for carriage				Hazard identifi-cation No.	UN No.	Name and description
Tank code	Special provisions			Packages	Bulk	Loading, unloading and handling	Operation			
4.3	4.3.5, 6.8.4	9.1.1.2	1.1.3.6	7.2.4	7.3.3	7.5.11	8.5	5.3.2.3		3.1.2
(12)	(13)	(14)	(15)	(16)	(17)	(18)	(19)	(20)	(1)	(2)
SGAV	TU3	AT	3		VV8	CV24		50	1467	GUANIDINE NITRATE
SGAN	TU3	AT	2	V11		CV24 CV28		56	1469	LEAD NITRATE
SGAN	TU3	AT	2	V11 V12		CV24 CV28		56	1470	LEAD PERCHLORATE, SOLID
SGAN	TU3	AT	2	V11		CV24		50	1471	LITHIUM HYPOCHLORITE, DRY or LITHIUM HYPOCHLORITE MIXTURE
SGAN	TU3	AT	2	V11 V12		CV24		50	1472	LITHIUM PEROXIDE
SGAV	TU3	AT	2		VV8	CV24		50	1473	MAGNESIUM BROMATE
SGAV	TU3	AT	3		VV8	CV24		50	1474	MAGNESIUM NITRATE
SGAV	TU3	AT	2	V11 V12	VV8	CV24		50	1475	MAGNESIUM PERCHLORATE
SGAN	TU3	AT	2	V11 V12		CV24		50	1476	MAGNESIUM PEROXIDE
SGAN	TU3	AT	2	V11		CV24		50	1477	NITRATES, INORGANIC, N.O.S.
SGAV	TU3	AT	3		VV8	CV24		50	1477	NITRATES, INORGANIC, N.O.S.
			1	V10		CV24	S20		1479	OXIDIZING SOLID, N.O.S.
SGAN	TU3	AT	2	V11		CV24		50	1479	OXIDIZING SOLID, N.O.S.
SGAN	TU3	AT	3			CV24		50	1479	OXIDIZING SOLID, N.O.S.
SGAV	TU3	AT	2	V11 V12	VV8	CV24		50	1481	PERCHLORATES, INORGANIC, N.O.S.
SGAV	TU3	AT	3		VV8	CV24		50	1481	PERCHLORATES, INORGANIC, N.O.S.
SGAN	TU3	AT	2	V11 V12		CV24		50	1482	PERMANGANATES, INORGANIC, N.O.S.
SGAN	TU3	AT	3			CV24		50	1482	PERMANGANATES, INORGANIC, N.O.S.
SGAN	TU3	AT	2	V11 V12		CV24		50	1483	PEROXIDES, INORGANIC, N.O.S.
SGAN	TU3	AT	3			CV24		50	1483	PEROXIDES, INORGANIC, N.O.S.
SGAV	TU3	AT	2		VV8	CV24		50	1484	POTASSIUM BROMATE
SGAV	TU3	AT	2		VV8	CV24		50	1485	POTASSIUM CHLORATE
SGAV	TU3	AT	3		VV8	CV24		50	1486	POTASSIUM NITRATE

UN No.	Name and description	Class	Classification code	Packing group	Labels	Special provisions	Limited quantities	Packaging			Portable tanks and bulk containers	
								Packing instructions	Special packing provisions	Mixed packing provisions	Instructions	Special provisions
	3.1.2	2.2	2.2	2.1.1.3	5.2.2	3.3	3.4.6	4.1.4	4.1.4	4.1.10	4.2.5.2 7.3.2	4.2.5.3
(1)	(2)	(3a)	(3b)	(4)	(5)	(6)	(7)	(8)	(9a)	(9b)	(10)	(11)
1487	POTASSIUM NITRATE AND SODIUM NITRITE MIXTURE	5.1	O2	II	5.1	607	LQ11	P002 IBC08	B4	MP10	T3	TP33
1488	POTASSIUM NITRITE	5.1	O2	II	5.1		LQ11	P002 IBC08	B4	MP10	T3	TP33
1489	POTASSIUM PERCHLORATE	5.1	O2	II	5.1		LQ11	P002 IBC06		MP2	T3	TP33
1490	POTASSIUM PERMANGANATE	5.1	O2	II	5.1		LQ11	P002 IBC08	B4	MP2	T3	TP33
1491	POTASSIUM PEROXIDE	5.1	O2	I	5.1		LQ0	P503 IBC06		MP2		
1492	POTASSIUM PERSULPHATE	5.1	O2	III	5.1		LQ12	P002 IBC08 LP02 R001	B3	MP10	T1	TP33
1493	SILVER NITRATE	5.1	O2	II	5.1		LQ11	P002 IBC08	B4	MP10	T3	TP33
1494	SODIUM BROMATE	5.1	O2	II	5.1		LQ11	P002 IBC08	B4	MP2	T3	TP33
1495	SODIUM CHLORATE	5.1	O2	II	5.1		LQ11	P002 IBC08	B4	MP2	T3 BK1 BK2	TP33
1496	SODIUM CHLORITE	5.1	O2	II	5.1		LQ11	P002 IBC08	B4	MP2	T3	TP33
1498	SODIUM NITRATE	5.1	O2	III	5.1		LQ12	P002 IBC08 LP02 R001	B3	MP10	T1 BK1 BK2	TP33
1499	SODIUM NITRATE AND POTASSIUM NITRATE MIXTURE	5.1	O2	III	5.1		LQ12	P002 IBC08 LP02 R001	B3	MP10	T1 BK1 BK2	TP33
1500	SODIUM NITRITE	5.1	OT2	III	5.1 +6.1		LQ12	P002 IBC08 R001	B3	MP10	T1	TP33
1502	SODIUM PERCHLORATE	5.1	O2	II	5.1		LQ11	P002 IBC06		MP2	T3	TP33
1503	SODIUM PERMANGANATE	5.1	O2	II	5.1		LQ11	P002 IBC06		MP2	T3	TP33
1504	SODIUM PEROXIDE	5.1	O2	I	5.1		LQ0	P503 IBC05		MP2		
1505	SODIUM PERSULPHATE	5.1	O2	III	5.1		LQ12	P002 IBC08 LP02 R001	B3	MP10	T1	TP33
1506	STRONTIUM CHLORATE	5.1	O2	II	5.1		LQ11	P002 IBC08	B4	MP2	T3	TP33
1507	STRONTIUM NITRATE	5.1	O2	III	5.1		LQ12	P002 IBC08 LP02 R001	B3	MP10	T1	TP33
1508	STRONTIUM PERCHLORATE	5.1	O2	II	5.1		LQ11	P002 IBC06		MP2	T3	TP33
1509	STRONTIUM PEROXIDE	5.1	O2	II	5.1		LQ11	P002 IBC06		MP2	T3	TP33
1510	TETRANITROMETHANE	5.1	OT1	I	5.1 +6.1	609	LQ0	P602		MP2		
1511	UREA HYDROGEN PEROXIDE	5.1	OC2	III	5.1 +8		LQ12	P002 IBC08 R001	B3	MP2	T1	TP33
1512	ZINC AMMONIUM NITRITE	5.1	O2	II	5.1		LQ11	P002 IBC08	B4	MP10	T3	TP33
1513	ZINC CHLORATE	5.1	O2	II	5.1		LQ11	P002 IBC08	B4	MP2	T3	TP33
1514	ZINC NITRATE	5.1	O2	II	5.1		LQ11	P002 IBC08	B4	MP10	T3	TP33

ADR tank		Vehicle for tank carriage	Transport category	Special provisions for carriage				Hazard identifi-cation No.	UN No.	Name and description
Tank code	Special provisions			Packages	Bulk	Loading, unloading and handling	Operation			
4.3	4.3.5, 6.8.4	9.1.1.2	1.1.3.6	7.2.4	7.3.3	7.5.11	8.5	5.3.2.3		3.1.2
(12)	(13)	(14)	(15)	(16)	(17)	(18)	(19)	(20)	(1)	(2)
SGAV	TU3	AT	2		VV8	CV24		50	1487	POTASSIUM NITRATE AND SODIUM NITRITE MIXTURE
SGAV	TU3	AT	2		VV8	CV24		50	1488	POTASSIUM NITRITE
SGAV	TU3	AT	2	V11 V12	VV8	CV24		50	1489	POTASSIUM PERCHLORATE
SGAN	TU3	AT	2			CV24		50	1490	POTASSIUM PERMANGANATE
			1	V10 V12		CV24	S20		1491	POTASSIUM PEROXIDE
SGAV	TU3	AT	3		VV8	CV24		50	1492	POTASSIUM PERSULPHATE
SGAV	TU3	AT	2		VV8	CV24		50	1493	SILVER NITRATE
SGAV	TU3	AT	2		VV8	CV24		50	1494	SODIUM BROMATE
SGAV	TU3	AT	2		VV8	CV24		50	1495	SODIUM CHLORATE
SGAN	TU3	AT	2	V11		CV24		50	1496	SODIUM CHLORITE
SGAV	TU3	AT	3		VV8	CV24		50	1498	SODIUM NITRATE
SGAV	TU3	AT	3		VV8	CV24		50	1499	SODIUM NITRATE AND POTASSIUM NITRATE MIXTURE
SGAN	TU3	AT	3			CV24 CV28		56	1500	SODIUM NITRITE
SGAV	TU3	AT	2	V11 V12	VV8	CV24		50	1502	SODIUM PERCHLORATE
SGAN	TU3	AT	2	V11 V12		CV24		50	1503	SODIUM PERMANGANATE
			1	V10		CV24	S20		1504	SODIUM PEROXIDE
SGAV	TU3	AT	3		VV8	CV24		50	1505	SODIUM PERSULPHATE
SGAV	TU3	AT	2	V11	VV8	CV24		50	1506	STRONTIUM CHLORATE
SGAV	TU3	AT	3		VV8	CV24		50	1507	STRONTIUM NITRATE
SGAV	TU3	AT	2	V11 V12	VV8	CV24		50	1508	STRONTIUM PERCHLORATE
SGAN	TU3	AT	2	V11 V12		CV24		50	1509	STRONTIUM PEROXIDE
L4BN	TU3 TU28	AT	1	V5		CV24 CV28	S20	559	1510	TETRANITROMETHANE
SGAN	TU3	AT	3			CV24		58	1511	UREA HYDROGEN PEROXIDE
SGAN	TU3	AT	2			CV24		50	1512	ZINC AMMONIUM NITRITE
SGAV	TU3	AT	2	V11	VV8	CV24		50	1513	ZINC CHLORATE
SGAN	TU3	AT	2			CV24		50	1514	ZINC NITRATE

UN No.	Name and description	Class	Classification code	Packing group	Labels	Special provisions	Limited quantities	Packaging			Portable tanks and bulk containers	
								Packing instructions	Special packing provisions	Mixed packing provisions	Instructions	Special provisions
	3.1.2	2.2	2.2	2.1.1.3	5.2.2	3.3	3.4.6	4.1.4	4.1.4	4.1.10	4.2.5.2 7.3.2	4.2.5.3
(1)	(2)	(3a)	(3b)	(4)	(5)	(6)	(7)	(8)	(9a)	(9b)	(10)	(11)
1515	ZINC PERMANGANATE	5.1	O2	II	5.1		LQ11	P002 IBC06		MP2	T3	TP33
1516	ZINC PEROXIDE	5.1	O2	II	5.1		LQ11	P002 IBC06		MP2	T3	TP33
1517	ZIRCONIUM PICRAMATE, WETTED with not less than 20% water, by mass	4.1	D	I	4.1		LQ0	P406	PP26	MP2		
1541	ACETONE CYANOHYDRIN, STABILIZED	6.1	T1	I	6.1		LQ0	P602		MP8 MP17	T14	TP2
1544	ALKALOIDS, SOLID, N.O.S. or ALKALOID SALTS, SOLID, N.O.S.	6.1	T2	I	6.1	43 274	LQ0	P002 IBC07		MP18	T6	TP9 TP33
1544	ALKALOIDS, SOLID, N.O.S. or ALKALOID SALTS, SOLID, N.O.S.	6.1	T2	II	6.1	43 274	LQ18	P002 IBC08	B4	MP10	T3	TP33
1544	ALKALOIDS, SOLID, N.O.S. or ALKALOID SALTS, SOLID, N.O.S.	6.1	T2	III	6.1	43 274	LQ9	P002 IBC08 LP02 R001	B3	MP10	T1	TP33
1545	ALLYL ISOTHIOCYANATE, STABILIZED	6.1	TF1	II	6.1 +3		LQ17	P001 IBC02		MP15	T7	TP2
1546	AMMONIUM ARSENATE	6.1	T5	II	6.1		LQ18	P002 IBC08	B4	MP10	T3	TP33
1547	ANILINE	6.1	T1	II	6.1	279	LQ17	P001 IBC02		MP15	T7	TP2
1548	ANILINE HYDROCHLORIDE	6.1	T2	III	6.1		LQ9	P002 IBC08 LP02 R001	B3	MP10	T1	TP33
1549	ANTIMONY COMPOUND, INORGANIC, SOLID, N.O.S.	6.1	T5	III	6.1	45 274 512	LQ9	P002 IBC08 LP02 R001	B3	MP10	T1	TP33
1550	ANTIMONY LACTATE	6.1	T5	III	6.1		LQ9	P002 IBC08 LP02 R001	B3	MP10	T1	TP33
1551	ANTIMONY POTASSIUM TARTRATE	6.1	T5	III	6.1		LQ9	P002 IBC08 LP02 R001	B3	MP10	T1	TP33
1553	ARSENIC ACID, LIQUID	6.1	T4	I	6.1		LQ0	P001		MP8 MP17	T20	TP2 TP7
1554	ARSENIC ACID, SOLID	6.1	T5	II	6.1		LQ18	P002 IBC08	B4	MP10	T3	TP33
1555	ARSENIC BROMIDE	6.1	T5	II	6.1		LQ18	P002 IBC08	B4	MP10	T3	TP33
1556	ARSENIC COMPOUND, LIQUID, N.O.S., inorganic, including: Arsenates, n.o.s., Arsenites, n.o.s.; and Arsenic sulphides, n.o.s.	6.1	T4	I	6.1	43 274	LQ0	P001		MP8 MP17	T14	TP2 TP9 TP27
1556	ARSENIC COMPOUND, LIQUID, N.O.S., inorganic, including: Arsenates, n.o.s., Arsenites, n.o.s.; and Arsenic sulphides, n.o.s.	6.1	T4	II	6.1	43 274	LQ17	P001 IBC02		MP15	T11	TP2 TP27

ADR tank		Vehicle for tank carriage	Transport category	Special provisions for carriage				Hazard identifi-cation No.	UN No.	Name and description
Tank code	Special provisions			Packages	Bulk	Loading, unloading and handling	Operation			
4.3	4.3.5, 6.8.4	9.1.1.2	1.1.3.6	7.2.4	7.3.3	7.5.11	8.5	5.3.2.3		3.1.2
(12)	(13)	(14)	(15)	(16)	(17)	(18)	(19)	(20)	(1)	(2)
SGAN	TU3	AT	2	V11 V12		CV24		50	1515	ZINC PERMANGANATE
SGAN	TU3	AT	2	V11 V12		CV24		50	1516	ZINC PEROXIDE
			1				S17		1517	ZIRCONIUM PICRAMATE, WETTED with not less than 20% water, by mass
L10CH	TU14 TU15 TE19 TE21	AT	1			CV1 CV13 CV28	S9 S17	669	1541	ACETONE CYANOHYDRIN, STABILIZED
S10AH	TU15 TE19	AT	1	V10 V12		CV1 CV13 CV28	S9 S17	66	1544	ALKALOIDS, SOLID, N.O.S. or ALKALOID SALTS, SOLID, N.O.S.
SGAH L4BH	TU15 TE15 TE19	AT	2	V11		CV13 CV28	S9 S19	60	1544	ALKALOIDS, SOLID, N.O.S. or ALKALOID SALTS, SOLID, N.O.S.
SGAH L4BH	TU15 TE15 TE19	AT	2		VV9b	CV13 CV28	S9	60	1544	ALKALOIDS, SOLID, N.O.S. or ALKALOID SALTS, SOLID, N.O.S.
L4BH	TU15 TE15 TE19	FL	2			CV13 CV28	S2 S9 S19	639	1545	ALLYL ISOTHIOCYANATE, STABILIZED
SGAH	TU15 TE15 TE19	AT	2	V11		CV13 CV28	S9 S19	60	1546	AMMONIUM ARSENATE
L4BH	TU15 TE15 TE19	AT	2			CV13 CV28	S9 S19	60	1547	ANILINE
SGAH	TU15 TE15 TE19	AT	2		VV9b	CV13 CV28	S9	60	1548	ANILINE HYDROCHLORIDE
SGAH L4BH	TU15 TE15 TE19	AT	2		VV9b	CV13 CV28	S9	60	1549	ANTIMONY COMPOUND, INORGANIC, SOLID, N.O.S.
SGAH L4BH	TU15 TE15 TE19	AT	2		VV9b	CV13 CV28	S9	60	1550	ANTIMONY LACTATE
SGAH L4BH	TU15 TE15 TE19	AT	2		VV9b	CV13 CV28	S9	60	1551	ANTIMONY POTASSIUM TARTRATE
L10CH	TU14 TU15 TE19 TE21	AT	1			CV1 CV13 CV28	S9 S17	66	1553	ARSENIC ACID, LIQUID
SGAH L4BH	TU15 TE15 TE19	AT	2	V11		CV13 CV28	S9 S19	60	1554	ARSENIC ACID, SOLID
SGAH L4BH	TU15 TE15 TE19	AT	2	V11		CV13 CV28	S9 S19	60	1555	ARSENIC BROMIDE
L10CH	TU14 TU15 TE19 TE21	AT	1			CV1 CV13 CV28	S9 S17	66	1556	ARSENIC COMPOUND, LIQUID, N.O.S., inorganic, including: Arsenates, n.o.s., Arsenites, n.o.s.; and Arsenic sulphides, n.o.s.
L4BH	TU15 TE15 TE19	AT	2			CV13 CV28	S9 S19	60	1556	ARSENIC COMPOUND, LIQUID, N.O.S., inorganic, including: Arsenates, n.o.s., Arsenites, n.o.s.; and Arsenic sulphides, n.o.s.

UN No.	Name and description	Class	Classification code	Packing group	Labels	Special provisions	Limited quantities	Packaging			Portable tanks and bulk containers	
								Packing instructions	Special packing provisions	Mixed packing provisions	Instructions	Special provisions
	3.1.2	2.2	2.2	2.1.1.3	5.2.2	3.3	3.4.6	4.1.4	4.1.4	4.1.10	4.2.5.2 7.3.2	4.2.5.3
(1)	(2)	(3a)	(3b)	(4)	(5)	(6)	(7)	(8)	(9a)	(9b)	(10)	(11)
1556	ARSENIC COMPOUND, LIQUID, N.O.S., inorganic, including: Arsenates, n.o.s., Arsenites, n.o.s.; and Arsenic sulphides, n.o.s.	6.1	T4	III	6.1	43 274	LQ19	P001 IBC03 LP01 R001		MP15	T7	TP2 TP28
1557	ARSENIC COMPOUND, SOLID, N.O.S., inorganic, including: Arsenates, n.o.s.; Arsenites, n.o.s.; and Arsenic sulphides, n.o.s.	6.1	T5	I	6.1	43 274	LQ0	P002 IBC07		MP18	T6	TP9 TP33
1557	ARSENIC COMPOUND, SOLID, N.O.S., inorganic, including: Arsenates, n.o.s.; Arsenites, n.o.s.; and Arsenic sulphides, n.o.s.	6.1	T5	II	6.1	43 274	LQ18	P002 IBC08	B4	MP10	T3	TP33
1557	ARSENIC COMPOUND, SOLID, N.O.S., inorganic, including: Arsenates, n.o.s.; Arsenites, n.o.s.; and Arsenic sulphides, n.o.s.	6.1	T5	III	6.1	43 274	LQ9	P002 IBC08 LP02 R001	B3	MP10	T1	TP33
1558	ARSENIC	6.1	T5	II	6.1		LQ18	P002 IBC08	B4	MP10	T3	TP33
1559	ARSENIC PENTOXIDE	6.1	T5	II	6.1		LQ18	P002 IBC08	B4	MP10	T3	TP33
1560	ARSENIC TRICHLORIDE	6.1	T4	I	6.1		LQ0	P602		MP8 MP17	T14	TP2
1561	ARSENIC TRIOXIDE	6.1	T5	II	6.1		LQ18	P002 IBC08	B4	MP10	T3	TP33
1562	ARSENICAL DUST	6.1	T5	II	6.1		LQ18	P002 IBC08	B4	MP10	T3	TP33
1564	BARIUM COMPOUND, N.O.S.	6.1	T5	II	6.1	177 274 513 587	LQ18	P002 IBC08	B4	MP10	T3	TP33
1564	BARIUM COMPOUND, N.O.S.	6.1	T5	III	6.1	177 274 513 587	LQ9	P002 IBC08 LP02 R001	B3	MP10	T1	TP33
1565	BARIUM CYANIDE	6.1	T5	I	6.1		LQ0	P002 IBC07		MP18	T6	TP33
1566	BERYLLIUM COMPOUND, N.O.S.	6.1	T5	II	6.1	274 514	LQ18	P002 IBC08	B4	MP10	T3	TP33
1566	BERYLLIUM COMPOUND, N.O.S.	6.1	T5	III	6.1	274 514	LQ9	P002 IBC08 LP02 R001	B3	MP10	T1	TP33
1567	BERYLLIUM POWDER	6.1	TF3	II	6.1 +4.1		LQ18	P002 IBC08	B4	MP10	T3	TP33
1569	BROMOACETONE	6.1	TF1	II	6.1 +3		LQ17	P602		MP15	T3	TP33
1570	BRUCINE	6.1	T2	I	6.1	43	LQ0	P002 IBC07		MP18	T6	TP33
1571	BARIUM AZIDE, WETTED with not less than 50% water, by mass	4.1	DT	I	4.1 +6.1	568	LQ0	P406		MP2		
1572	CACODYLIC ACID	6.1	T5	II	6.1		LQ18	P002 IBC08	B4	MP10	T3	TP33
1573	CALCIUM ARSENATE	6.1	T5	II	6.1		LQ18	P002 IBC08	B4	MP10	T3	TP33

ADR tank		Vehicle for tank carriage	Transport category	Special provisions for carriage				Hazard identification No.	UN No.	Name and description
Tank code	Special provisions			Packages	Bulk	Loading, unloading and handling	Operation			
4.3	4.3.5, 6.8.4	9.1.1.2	1.1.3.6	7.2.4	7.3.3	7.5.11	8.5	5.3.2.3		3.1.2
(12)	(13)	(14)	(15)	(16)	(17)	(18)	(19)	(20)	(1)	(2)
L4BH	TU15 TE15 TE19	AT	2			CV13 CV28	S9	60	1556	ARSENIC COMPOUND, LIQUID, N.O.S., inorganic, including: Arsenates, n.o.s., Arsenites, n.o.s.; and Arsenic sulphides, n.o.s.
S10AH L10CH	TU15 TE19	AT	1	V10 V12		CV1 CV13 CV28	S9 S17	66	1557	ARSENIC COMPOUND, SOLID, N.O.S., inorganic, including: Arsenates, n.o.s.; Arsenites, n.o.s.; and Arsenic sulphides, n.o.s.
SGAH L4BH	TU15 TE15 TE19	AT	2	V11		CV13 CV28	S9 S19	60	1557	ARSENIC COMPOUND, SOLID, N.O.S., inorganic, including: Arsenates, n.o.s.; Arsenites, n.o.s.; and Arsenic sulphides, n.o.s.
SGAH L4BH	TU15 TE15 TE19	AT	2		VV9b	CV13 CV28	S9	60	1557	ARSENIC COMPOUND, SOLID, N.O.S., inorganic, including: Arsenates, n.o.s.; Arsenites, n.o.s.; and Arsenic sulphides, n.o.s.
SGAH	TU15 TE15 TE19	AT	2	V11		CV13 CV28	S9 S19	60	1558	ARSENIC
SGAH	TU15 TE15 TE19	AT	2	V11		CV13 CV28	S9 S19	60	1559	ARSENIC PENTOXIDE
L10CH	TU14 TU15 TE19 TE21	AT	1			CV1 CV13 CV28	S9 S17	66	1560	ARSENIC TRICHLORIDE
SGAH	TU15 TE15 TE19	AT	2	V11		CV13 CV28	S9 S19	60	1561	ARSENIC TRIOXIDE
SGAH	TU15 TE15 TE19	AT	2	V11		CV13 CV28	S9 S19	60	1562	ARSENICAL DUST
SGAH L4BH	TU15 TE15 TE19	AT	2	V11		CV13 CV28	S9 S19	60	1564	BARIUM COMPOUND, N.O.S.
SGAH L4BH	TU15 TE15 TE19	AT	2		VV9a	CV13 CV28	S9	60	1564	BARIUM COMPOUND, N.O.S.
S10AH	TU15 TE19	AT	1	V10 V12		CV1 CV13 CV28	S9 S17	66	1565	BARIUM CYANIDE
SGAH L4BH	TU15 TE15 TE19	AT	2	V11		CV13 CV28	S9 S19	60	1566	BERYLLIUM COMPOUND, N.O.S.
SGAH L4BH	TU15 TE15 TE19	AT	2		VV9b	CV13 CV28	S9	60	1566	BERYLLIUM COMPOUND, N.O.S.
SGAH	TU15 TE15 TE19	AT	2	V11		CV13 CV28	S9 S19	64	1567	BERYLLIUM POWDER
L4BH	TU15 TE15 TE19	FL	2			CV13 CV28	S2 S9 S19	63	1569	BROMOACETONE
S10AH L10CH	TU14 TU15 TE19 TE21	AT	1	V10 V12		CV1 CV13 CV28	S9 S17	66	1570	BRUCINE
			1			CV28	S17		1571	BARIUM AZIDE, WETTED with not less than 50% water, by mass
SGAH	TU15 TE15 TE19	AT	2	V11		CV13 CV28	S9 S19	60	1572	CACODYLIC ACID
SGAH	TU15 TE15 TE19	AT	2	V11		CV13 CV28	S9 S19	60	1573	CALCIUM ARSENATE

UN No.	Name and description	Class	Classification code	Packing group	Labels	Special provisions	Limited quantities	Packaging			Portable tanks and bulk containers	
								Packing instructions	Special packing provisions	Mixed packing provisions	Instructions	Special provisions
	3.1.2	2.2	2.2	2.1.1.3	5.2.2	3.3	3.4.6	4.1.4	4.1.4	4.1.10	4.2.5.2 7.3.2	4.2.5.3
(1)	(2)	(3a)	(3b)	(4)	(5)	(6)	(7)	(8)	(9a)	(9b)	(10)	(11)
1574	CALCIUM ARSENATE AND CALCIUM ARSENITE MIXTURE, SOLID	6.1	T5	II	6.1		LQ18	P002 IBC08	B4	MP10	T3	TP33
1575	CALCIUM CYANIDE	6.1	T5	I	6.1		LQ0	P002 IBC07		MP18	T6	TP33
1577	CHLORODINITRO-BENZENES, LIQUID	6.1	T1	II	6.1	279	LQ17	P001 IBC02		MP15	T7	TP2
1578	CHLORONITROBENZENES, SOLID	6.1	T2	II	6.1	279	LQ18	P002 IBC08	B4	MP10	T3	TP33
1579	4-CHLORO-o-TOLUIDINE HYDROCHLORIDE, SOLID	6.1	T2	III	6.1		LQ9	P002 IBC08 LP02 R001	B3	MP10	T1	TP33
1580	CHLOROPICRIN	6.1	T1	I	6.1		LQ0	P602		MP8 MP17	T14	TP2
1581	CHLOROPICRIN AND METHYL BROMIDE MIXTURE with more than 2% chloropicrin	2	2T		2.3		LQ0	P200		MP9	(M) T50	
1582	CHLOROPICRIN AND METHYL CHLORIDE MIXTURE	2	2T		2.3		LQ0	P200		MP9	(M) T50	
1583	CHLOROPICRIN MIXTURE, N.O.S.	6.1	T1	I	6.1	274 315 515	LQ0	P602		MP8 MP17		
1583	CHLOROPICRIN MIXTURE, N.O.S.	6.1	T1	II	6.1	274 515	LQ17	P001 IBC02		MP15		
1583	CHLOROPICRIN MIXTURE, N.O.S.	6.1	T1	III	6.1	274 515	LQ19	P001 IBC03 LP01 R001		MP15		
1585	COPPER ACETOARSENITE	6.1	T5	II	6.1		LQ18	P002 IBC08	B4	MP10	T3	TP33
1586	COPPER ARSENITE	6.1	T5	II	6.1		LQ18	P002 IBC08	B4	MP10	T3	TP33
1587	COPPER CYANIDE	6.1	T5	II	6.1		LQ18	P002 IBC08	B4	MP10	T3	TP33
1588	CYANIDES, INORGANIC, SOLID, N.O.S.	6.1	T5	I	6.1	47 274	LQ0	P002 IBC07		MP18	T6	TP9 TP33
1588	CYANIDES, INORGANIC, SOLID, N.O.S.	6.1	T5	II	6.1	47 274	LQ18	P002 IBC08	B4	MP10	T3	TP33
1588	CYANIDES, INORGANIC, SOLID, N.O.S.	6.1	T5	III	6.1	47 274	LQ9	P002 IBC08 LP02 R001	B3	MP10	T1	TP33
1589	CYANOGEN CHLORIDE, STABILIZED	2	2TC		2.3 +8		LQ0	P200		MP9		
1590	DICHLOROANILINES, LIQUID	6.1	T1	II	6.1	279	LQ17	P001 IBC02		MP15	T7	TP2
1591	o-DICHLOROBENZENE	6.1	T1	III	6.1	279	LQ19	P001 IBC03 LP01 R001		MP15	T4	TP1
1593	DICHLOROMETHANE	6.1	T1	III	6.1	516	LQ19	P001 IBC03 LP01 R001	B8	MP15	T7	TP2
1594	DIETHYL SULPHATE	6.1	T1	II	6.1		LQ17	P001 IBC02		MP15	T7	TP2

ADR tank		Vehicle for tank carriage	Transport category	Special provisions for carriage				Hazard identifi-cation No.	UN No.	Name and description
Tank code	Special provisions			Packages	Bulk	Loading, unloading and handling	Operation			
4.3	4.3.5, 6.8.4	9.1.1.2	1.1.3.6	7.2.4	7.3.3	7.5.11	8.5	5.3.2.3		3.1.2
(12)	(13)	(14)	(15)	(16)	(17)	(18)	(19)	(20)	(1)	(2)
SGAH	TU15 TE15 TE19	AT	2	V11		CV13 CV28	S9 S19	60	1574	CALCIUM ARSENATE AND CALCIUM ARSENITE MIXTURE, SOLID
S10AH	TU15 TE19	AT	1	V10 V12		CV1 CV13 CV28	S9 S17	66	1575	CALCIUM CYANIDE
L4BH	TU15 TE15 TE19	AT	2			CV13 CV28	S9 S19	60	1577	CHLORODINITRO-BENZENES, LIQUID
SGAH	TU15 TE15 TE19	AT	2	V11		CV13 CV28	S9 S19	60	1578	CHLORONITROBENZENES, SOLID
SGAH L4BH	TU15 TE15 TE19	AT	2		VV9b	CV13 CV28	S9	60	1579	4-CHLORO-o-TOLUIDINE HYDROCHLORIDE, SOLID
L10CH	TU14 TU15 TE19 TE21	AT	1			CV1 CV13 CV28	S9 S17	66	1580	CHLOROPICRIN
PxBH(M)		AT	1			CV9 CV10 CV36	S7 S17	26	1581	CHLOROPICRIN AND METHYL BROMIDE MIXTURE with more than 2% chloropicrin
PxBH(M)		AT	1			CV9 CV10 CV36	S7 S17	26	1582	CHLOROPICRIN AND METHYL CHLORIDE MIXTURE
L10CH	TU14 TU15 TE19 TE21	AT	1			CV1 CV13 CV28	S9 S17	66	1583	CHLOROPICRIN MIXTURE, N.O.S.
L4BH	TU15 TE15 TE19	AT	2			CV13 CV28	S9 S19	60	1583	CHLOROPICRIN MIXTURE, N.O.S.
L4BH	TU15 TE15 TE19	AT	2			CV13 CV28	S9	60	1583	CHLOROPICRIN MIXTURE, N.O.S.
SGAH	TU15 TE15 TE19	AT	2	V11		CV13 CV28	S9 S19	60	1585	COPPER ACETOARSENITE
SGAH	TU15 TE15 TE19	AT	2	V11		CV13 CV28	S9 S19	60	1586	COPPER ARSENITE
SGAH	TU15 TE15 TE19	AT	2	V11		CV13 CV28	S9 S19	60	1587	COPPER CYANIDE
S10AH	TU15 TE19	AT	1	V10 V12		CV1 CV13 CV28	S9 S17	66	1588	CYANIDES, INORGANIC, SOLID, N.O.S.
SGAH	TU15 TE15 TE19	AT	2	V11		CV13 CV28	S9 S19	60	1588	CYANIDES, INORGANIC, SOLID, N.O.S.
SGAH	TU15 TE15 TE19	AT	2		VV9b	CV13 CV28	S9	60	1588	CYANIDES, INORGANIC, SOLID, N.O.S.
			1			CV9 CV10 CV36	S7 S17		1589	CYANOGEN CHLORIDE, STABILIZED
L4BH	TU15 TE15 TE19	AT	2			CV13 CV28	S9 S19	60	1590	DICHLOROANILINES, LIQUID
L4BH	TU15 TE15 TE19	AT	2			CV13 CV28	S9	60	1591	o-DICHLOROBENZENE
L4BH	TU15 TE15 TE19	AT	2			CV13 CV28	S9	60	1593	DICHLOROMETHANE
L4BH	TU15 TE15 TE19	AT	2			CV13 CV28	S9 S19	60	1594	DIETHYL SULPHATE

UN No.	Name and description	Class	Classification code	Packing group	Labels	Special provisions	Limited quantities	Packaging			Portable tanks and bulk containers	
								Packing instructions	Special packing provisions	Mixed packing provisions	Instructions	Special provisions
	3.1.2	2.2	2.2	2.1.1.3	5.2.2	3.3	3.4.6	4.1.4	4.1.4	4.1.10	4.2.5.2 7.3.2	4.2.5.3
(1)	(2)	(3a)	(3b)	(4)	(5)	(6)	(7)	(8)	(9a)	(9b)	(10)	(11)
1595	DIMETHYL SULPHATE	6.1	TC1	I	6.1 +8		LQ0	P602		MP8 MP17	T14	TP2
1596	DINITROANILINES	6.1	T2	II	6.1		LQ18	P002 IBC08	B4	MP10	T3	TP33
1597	DINITROBENZENES, LIQUID	6.1	T1	II	6.1		LQ17	P001 IBC02		MP15	T7	TP2
1597	DINITROBENZENES, LIQUID	6.1	T1	III	6.1		LQ19	P001 IBC03 LP01 R001		MP15	T7	TP2
1598	DINITRO-o-CRESOL	6.1	T2	II	6.1	43	LQ18	P002 IBC08	B4	MP10	T3	TP33
1599	DINITROPHENOL SOLUTION	6.1	T1	II	6.1		LQ17	P001 IBC02		MP15	T7	TP2
1599	DINITROPHENOL SOLUTION	6.1	T1	III	6.1		LQ19	P001 IBC03 LP01 R001		MP15	T4	TP1
1600	DINITROTOLUENES, MOLTEN	6.1	T1	II	6.1		LQ0				T7	TP3
1601	DISINFECTANT, SOLID, TOXIC, N.O.S.	6.1	T2	I	6.1	274	LQ0	P002 IBC07		MP18	T6	TP9 TP33
1601	DISINFECTANT, SOLID, TOXIC, N.O.S.	6.1	T2	II	6.1	274	LQ18	P002 IBC08	B4	MP10	T3	TP33
1601	DISINFECTANT, SOLID, TOXIC, N.O.S.	6.1	T2	III	6.1	274	LQ9	P002 IBC08 LP02 R001	B3	MP10	T1	TP33
1602	DYE, LIQUID, TOXIC, N.O.S. or DYE INTERMEDIATE, LIQUID, TOXIC, N.O.S.	6.1	T1	I	6.1	274	LQ0	P001		MP8 MP17		
1602	DYE, LIQUID, TOXIC, N.O.S. or DYE INTERMEDIATE, LIQUID, TOXIC, N.O.S.	6.1	T1	II	6.1	274	LQ17	P001 IBC02		MP15		
1602	DYE, LIQUID, TOXIC, N.O.S. or DYE INTERMEDIATE, LIQUID, TOXIC, N.O.S.	6.1	T1	III	6.1	274	LQ19	P001 IBC03 LP01 R001		MP15		
1603	ETHYL BROMOACETATE	6.1	TF1	II	6.1 +3		LQ17	P001 IBC02		MP15	T7	TP2
1604	ETHYLENEDIAMINE	8	CF1	II	8 +3		LQ22	P001 IBC02		MP15	T7	TP2
1605	ETHYLENE DIBROMIDE	6.1	T1	I	6.1		LQ0	P602 PR3		MP8 MP17	T14	TP2
1606	FERRIC ARSENATE	6.1	T5	II	6.1		LQ18	P002 IBC08	B4	MP10	T3	TP33
1607	FERRIC ARSENITE	6.1	T5	II	6.1		LQ18	P002 IBC08	B4	MP10	T3	TP33
1608	FERROUS ARSENATE	6.1	T5	II	6.1		LQ18	P002 IBC08	B4	MP10	T3	TP33
1611	HEXAETHYL TETRAPHOSPHATE	6.1	T1	II	6.1		LQ17	P001 IBC02		MP15	T7	TP2
1612	HEXAETHYL TETRAPHOSPHATE AND COMPRESSED GAS MIXTURE	2	1T		2.3		LQ0	P200		MP9	(M)	

ADR tank		Vehicle for tank carriage	Transport category	Special provisions for carriage				Hazard identifi-cation No.	UN No.	Name and description
Tank code	Special provisions			Packages	Bulk	Loading, unloading and handling	Operation			
4.3	4.3.5, 6.8.4	9.1.1.2	1.1.3.6	7.2.4	7.3.3	7.5.11	8.5	5.3.2.3		3.1.2
(12)	(13)	(14)	(15)	(16)	(17)	(18)	(19)	(20)	(1)	(2)
L10CH	TU14 TU15 TE19 TE21	AT	1			CV1 CV13 CV28	S9 S17	668	1595	DIMETHYL SULPHATE
SGAH L4BH	TU15 TE15 TE19	AT	2	V11		CV13 CV28	S9 S19	60	1596	DINITROANILINES
L4BH	TU15 TE15 TE19	AT	2			CV13 CV28 CV31	S9 S19	60	1597	DINITROBENZENES, LIQUID
L4BH	TU15 TE15 TE19	AT	2			CV13 CV28 CV31	S9	60	1597	DINITROBENZENES, LIQUID
SGAH L4BH	TU15 TE15 TE19	AT	2	V11		CV13 CV28	S9 S19	60	1598	DINITRO-o-CRESOL
L4BH	TU15 TE15 TE19	AT	2			CV13 CV28	S9 S19	60	1599	DINITROPHENOL SOLUTION
L4BH	TU15 TE15 TE19	AT	2			CV13 CV28	S9	60	1599	DINITROPHENOL SOLUTION
L4BH	TU15 TE15 TE19	AT	0			CV13	S9 S19	60	1600	DINITROTOLUENES, MOLTEN
S10AH L10CH	TU15 TE19	AT	1	V10 V12		CV1 CV13 CV28	S9 S17	66	1601	DISINFECTANT, SOLID, TOXIC, N.O.S.
SGAH L4BH	TU15 TE15 TE19	AT	2	V11		CV13 CV28	S9 S19	60	1601	DISINFECTANT, SOLID, TOXIC, N.O.S.
SGAH L4BH	TU15 TE15 TE19	AT	2		VV9b	CV13 CV28	S9	60	1601	DISINFECTANT, SOLID, TOXIC, N.O.S.
L10CH	TU14 TU15 TE19 TE21	AT	1			CV1 CV13 CV28	S9 S17	66	1602	DYE, LIQUID, TOXIC, N.O.S. or DYE INTERMEDIATE, LIQUID, TOXIC, N.O.S.
L4BH	TU15 TE15 TE19	AT	2			CV13 CV28	S9 S19	60	1602	DYE, LIQUID, TOXIC, N.O.S. or DYE INTERMEDIATE, LIQUID, TOXIC, N.O.S.
L4BH	TU15 TE15 TE19	AT	2			CV13 CV28	S9	60	1602	DYE, LIQUID, TOXIC, N.O.S. or DYE INTERMEDIATE, LIQUID, TOXIC, N.O.S.
L4BH	TU15 TE15 TE19	FL	2			CV13 CV28	S2 S9 S19	63	1603	ETHYL BROMOACETATE
L4BN		FL	2				S2	83	1604	ETHYLENEDIAMINE
L10CH	TU14 TU15 TE19 TE21	AT	1			CV1 CV13 CV28	S9 S17	66	1605	ETHYLENE DIBROMIDE
SGAH	TU15 TE15 TE19	AT	2	V11		CV13 CV28	S9 S19	60	1606	FERRIC ARSENATE
SGAH	TU15 TE15 TE19	AT	2	V11		CV13 CV28	S9 S19	60	1607	FERRIC ARSENITE
SGAH	TU15 TE15 TE19	AT	2	V11		CV13 CV28	S9 S19	60	1608	FERROUS ARSENATE
L4BH	TU15 TE15 TE19	AT	2			CV13 CV28	S9 S19	60	1611	HEXAETHYL TETRAPHOSPHATE
CxBH(M)		AT	1			CV9 CV10 CV36	S7 S17	26	1612	HEXAETHYL TETRAPHOSPHATE AND COMPRESSED GAS MIXTURE

UN No.	Name and description	Class	Classification code	Packing group	Labels	Special provisions	Limited quantities	Packaging			Portable tanks and bulk containers	
								Packing instructions	Special packing provisions	Mixed packing provisions	Instructions	Special provisions
	3.1.2	2.2	2.2	2.1.1.3	5.2.2	3.3	3.4.6	4.1.4	4.1.4	4.1.10	4.2.5.2 7.3.2	4.2.5.3
(1)	(2)	(3a)	(3b)	(4)	(5)	(6)	(7)	(8)	(9a)	(9b)	(10)	(11)
1613	HYDROCYANIC ACID, AQUEOUS SOLUTION (HYDROGEN CYANIDE, AQUEOUS SOLUTION) with not more than 20% hydrogen cyanide	6.1	TF1	I	6.1 +3	48	LQ0	P601 PR3		MP8 MP17	T14	TP2
1614	HYDROGEN CYANIDE, STABILIZED, containing less than 3% water and absorbed in a porous inert material	6.1	TF1	I	6.1 +3	603	LQ0	P601 PR7	RR3	MP2		
1616	LEAD ACETATE	6.1	T5	III	6.1		LQ9	P002 IBC08 LP02 R001	B3	MP10	T1	TP33
1617	LEAD ARSENATES	6.1	T5	II	6.1		LQ18	P002 IBC08	B4	MP10	T3	TP33
1618	LEAD ARSENITES	6.1	T5	II	6.1		LQ18	P002 IBC08	B4	MP10	T3	TP33
1620	LEAD CYANIDE	6.1	T5	II	6.1		LQ18	P002 IBC08	B4	MP10	T3	TP33
1621	LONDON PURPLE	6.1	T5	II	6.1	43	LQ18	P002 IBC08	B4	MP10	T3	TP33
1622	MAGNESIUM ARSENATE	6.1	T5	II	6.1		LQ18	P002 IBC08	B4	MP10	T3	TP33
1623	MERCURIC ARSENATE	6.1	T5	II	6.1		LQ18	P002 IBC08	B4	MP10	T3	TP33
1624	MERCURIC CHLORIDE	6.1	T5	II	6.1		LQ18	P002 IBC08	B4	MP10	T3	TP33
1625	MERCURIC NITRATE	6.1	T5	II	6.1		LQ18	P002 IBC08	B4	MP10	T3	TP33
1626	MERCURIC POTASSIUM CYANIDE	6.1	T5	I	6.1		LQ0	P002 IBC07		MP18	T6	TP33
1627	MERCUROUS NITRATE	6.1	T5	II	6.1		LQ18	P002 IBC08	B4	MP10	T3	TP33
1629	MERCURY ACETATE	6.1	T5	II	6.1		LQ18	P002 IBC08	B4	MP10	T3	TP33
1630	MERCURY AMMONIUM CHLORIDE	6.1	T5	II	6.1		LQ18	P002 IBC08	B4	MP10	T3	TP33
1631	MERCURY BENZOATE	6.1	T5	II	6.1		LQ18	P002 IBC08	B4	MP10	T3	TP33
1634	MERCURY BROMIDES	6.1	T5	II	6.1		LQ18	P002 IBC08	B4	MP10	T3	TP33
1636	MERCURY CYANIDE	6.1	T5	II	6.1		LQ18	P002 IBC08	B4	MP10	T3	TP33
1637	MERCURY GLUCONATE	6.1	T5	II	6.1		LQ18	P002 IBC08	B4	MP10	T3	TP33
1638	MERCURY IODIDE	6.1	T5	II	6.1		LQ18	P002 IBC08	B4	MP10	T3	TP33
1639	MERCURY NUCLEATE	6.1	T5	II	6.1		LQ18	P002 IBC08	B4	MP10	T3	TP33
1640	MERCURY OLEATE	6.1	T5	II	6.1		LQ18	P002 IBC08	B4	MP10	T3	TP33
1641	MERCURY OXIDE	6.1	T5	II	6.1		LQ18	P002 IBC08	B4	MP10	T3	TP33
1642	MERCURY OXYCYANIDE, DESENSITIZED	6.1	T5	II	6.1		LQ18	P002 IBC08	B4	MP10	T3	TP33
1643	MERCURY POTASSIUM IODIDE	6.1	T5	II	6.1		LQ18	P002 IBC08	B4	MP10	T3	TP33
1644	MERCURY SALICYLATE	6.1	T5	II	6.1		LQ18	P002 IBC08	B4	MP10	T3	TP33
1645	MERCURY SULPHATE	6.1	T5	II	6.1		LQ18	P002 IBC08	B4	MP10	T3	TP33
1646	MERCURY THIOCYANATE	6.1	T5	II	6.1		LQ18	P002 IBC08	B4	MP10	T3	TP33

ADR tank		Vehicle for tank carriage	Transport category	Special provisions for carriage				Hazard identifi-cation No.	UN No.	Name and description
Tank code	Special provisions			Packages	Bulk	Loading, unloading and handling	Operation			
4.3	4.3.5, 6.8.4	9.1.1.2	1.1.3.6	7.2.4	7.3.3	7.5.11	8.5	5.3.2.3		3.1.2
(12)	(13)	(14)	(15)	(16)	(17)	(18)	(19)	(20)	(1)	(2)
L15DH(+)	TU14 TU15 TE19 TE21	FL	0			CV1 CV13 CV28	S2 S9 S17	663	1613	HYDROCYANIC ACID, AQUEOUS SOLUTION (HYDROGEN CYANIDE, AQUEOUS SOLUTION) with not more than 20% hydrogen cyanide
			0			CV1 CV13 CV28	S2 S9 S10 S17		1614	HYDROGEN CYANIDE, STABILIZED, containing less than 3% water and absorbed in a porous inert material
SGAH L4BH	TU15 TE15 TE19	AT	2		VV9b	CV13 CV28	S9	60	1616	LEAD ACETATE
SGAH	TU15 TE15 TE19	AT	2	V11		CV13 CV28	S9 S19	60	1617	LEAD ARSENATES
SGAH	TU15 TE15 TE19	AT	2	V11		CV13 CV28	S9 S19	60	1618	LEAD ARSENITES
SGAH	TU15 TE15 TE19	AT	2	V11		CV13 CV28	S9 S19	60	1620	LEAD CYANIDE
SGAH	TU15 TE15 TE19	AT	2	V11		CV13 CV28	S9 S19	60	1621	LONDON PURPLE
SGAH	TU15 TE15 TE19	AT	2	V11		CV13 CV28	S9 S19	60	1622	MAGNESIUM ARSENATE
SGAH	TU15 TE15 TE19	AT	2	V11		CV13 CV28	S9 S19	60	1623	MERCURIC ARSENATE
SGAH	TU15 TE15 TE19	AT	2	V11		CV13 CV28	S9 S19	60	1624	MERCURIC CHLORIDE
SGAH	TU15 TE15 TE19	AT	2	V11		CV13 CV28	S9 S19	60	1625	MERCURIC NITRATE
S10AH	TU15 TE19	AT	1	V10 V12		CV1 CV13 CV28	S9 S17	66	1626	MERCURIC POTASSIUM CYANIDE
SGAH	TU15 TE15 TE19	AT	2	V11		CV13 CV28	S9 S19	60	1627	MERCUROUS NITRATE
SGAH	TU15 TE15 TE19	AT	2	V11		CV13 CV28	S9 S19	60	1629	MERCURY ACETATE
SGAH	TU15 TE15 TE19	AT	2	V11		CV13 CV28	S9 S19	60	1630	MERCURY AMMONIUM CHLORIDE
SGAH	TU15 TE15 TE19	AT	2	V11		CV13 CV28	S9 S19	60	1631	MERCURY BENZOATE
SGAH	TU15 TE15 TE19	AT	2	V11		CV13 CV28	S9 S19	60	1634	MERCURY BROMIDES
SGAH	TU15 TE15 TE19	AT	2	V11		CV13 CV28	S9 S19	60	1636	MERCURY CYANIDE
SGAH	TU15 TE15 TE19	AT	2	V11		CV13 CV28	S9 S19	60	1637	MERCURY GLUCONATE
SGAH	TU15 TE15 TE19	AT	2	V11		CV13 CV28	S9 S19	60	1638	MERCURY IODIDE
SGAH	TU15 TE15 TE19	AT	2	V11		CV13 CV28	S9 S19	60	1639	MERCURY NUCLEATE
SGAH	TU15 TE15 TE19	AT	2	V11		CV13 CV28	S9 S19	60	1640	MERCURY OLEATE
SGAH	TU15 TE15 TE19	AT	2	V11		CV13 CV28	S9 S19	60	1641	MERCURY OXIDE
SGAH	TU15 TE15 TE19	AT	2	V11		CV13 CV28	S9 S19	60	1642	MERCURY OXYCYANIDE, DESENSITIZED
SGAH	TU15 TE15 TE19	AT	2	V11		CV13 CV28	S9 S19	60	1643	MERCURY POTASSIUM IODIDE
SGAH	TU15 TE15 TE19	AT	2	V11		CV13 CV28	S9 S19	60	1644	MERCURY SALICYLATE
SGAH	TU15 TE15 TE19	AT	2	V11		CV13 CV28	S9 S19	60	1645	MERCURY SULPHATE
SGAH	TU15 TE15 TE19	AT	2	V11		CV13 CV28	S9 S19	60	1646	MERCURY THIOCYANATE

UN No.	Name and description	Class	Classification code	Packing group	Labels	Special provisions	Limited quantities	Packaging			Portable tanks and bulk containers	
								Packing instructions	Special packing provisions	Mixed packing provisions	Instructions	Special provisions
	3.1.2	2.2	2.2	2.1.1.3	5.2.2	3.3	3.4.6	4.1.4	4.1.4	4.1.10	4.2.5.2 7.3.2	4.2.5.3
(1)	(2)	(3a)	(3b)	(4)	(5)	(6)	(7)	(8)	(9a)	(9b)	(10)	(11)
1647	METHYL BROMIDE AND ETHYLENE DIBROMIDE MIXTURE, LIQUID	6.1	T1	I	6.1		LQ0	P602		MP8 MP17		
1648	ACETONITRILE	3	F1	II	3		LQ4	P001 IBC02 R001		MP19	T7	TP2
1649	MOTOR FUEL ANTI-KNOCK MIXTURE	6.1	T3	I	6.1	162	LQ0	P602		MP8 MP17	T14	TP2
1650	beta-NAPHTHYLAMINE, SOLID	6.1	T2	II	6.1		LQ18	P002 IBC08	B4	MP10	T3	TP33
1651	NAPHTHYLTHIOUREA	6.1	T2	II	6.1	43	LQ18	P002 IBC08	B4	MP10	T3	TP33
1652	NAPHTHYLUREA	6.1	T2	II	6.1		LQ18	P002 IBC08	B4	MP10	T3	TP33
1653	NICKEL CYANIDE	6.1	T5	II	6.1		LQ18	P002 IBC08	B4	MP10	T3	TP33
1654	NICOTINE	6.1	T1	II	6.1		LQ17	P001 IBC02		MP15		
1655	NICOTINE COMPOUND, SOLID, N.O.S. or NICOTINE PREPARATION, SOLID, N.O.S.	6.1	T2	I	6.1	43 274	LQ0	P002 IBC07		MP18	T6	TP9 TP33
1655	NICOTINE COMPOUND, SOLID, N.O.S. or NICOTINE PREPARATION, SOLID, N.O.S.	6.1	T2	II	6.1	43 274	LQ18	P002 IBC08	B4	MP10	T3	TP33
1655	NICOTINE COMPOUND, SOLID, N.O.S. or NICOTINE PREPARATION, SOLID, N.O.S.	6.1	T2	III	6.1	43 274	LQ9	P002 IBC08 LP02 R001	B3	MP10	T1	TP33
1656	NICOTINE HYDROCHLORIDE, LIQUID or SOLUTION	6.1	T1	II	6.1	43	LQ17	P001 IBC02		MP15		
1656	NICOTINE HYDROCHLORIDE, LIQUID or SOLUTION	6.1	T1	III	6.1	43	LQ19	P001 IBC03 LP01 R001		MP15		
1657	NICOTINE SALICYLATE	6.1	T2	II	6.1		LQ18	P002 IBC08	B4	MP10	T3	TP33
1658	NICOTINE SULPHATE, SOLUTION	6.1	T1	II	6.1		LQ17	P001 IBC02		MP15	T7	TP2
1658	NICOTINE SULPHATE, SOLUTION	6.1	T1	III	6.1		LQ19	P001 IBC03 LP01 R001		MP15	T7	TP2
1659	NICOTINE TARTRATE	6.1	T2	II	6.1		LQ18	P002 IBC08	B4	MP10	T3	TP33
1660	NITRIC OXIDE, COMPRESSED	2	1TOC		2.3 +5.1 +8		LQ0	P200		MP9		
1661	NITROANILINES (o-, m-, p-)	6.1	T2	II	6.1	279	LQ18	P002 IBC08	B4	MP10	T3	TP33
1662	NITROBENZENE	6.1	T1	II	6.1	279	LQ17	P001 IBC02		MP15	T7	TP2
1663	NITROPHENOLS (o-, m-, p-)	6.1	T2	III	6.1	279	LQ9	P002 IBC08 LP02 R001	B3	MP10	T1	TP33
1664	NITROTOLUENES, LIQUID	6.1	T1	II	6.1		LQ17	P001 IBC02		MP15	T7	TP2
1665	NITROXYLENES, LIQUID	6.1	T1	II	6.1		LQ17	P001 IBC02		MP15	T7	TP2

ADR tank		Vehicle for tank carriage	Transport category	Special provisions for carriage				Hazard identifi-cation No.	UN No.	Name and description
Tank code	Special provisions			Packages	Bulk	Loading, unloading and handling	Operation			
4.3	4.3.5, 6.8.4	9.1.1.2	1.1.3.6	7.2.4	7.3.3	7.5.11	8.5	5.3.2.3		3.1.2
(12)	(13)	(14)	(15)	(16)	(17)	(18)	(19)	(20)	(1)	(2)
L10CH	TU14 TU15 TE19 TE21	AT	1			CV1 CV13 CV28	S9 S17	66	1647	METHYL BROMIDE AND ETHYLENE DIBROMIDE MIXTURE, LIQUID
LGBF		FL	2				S2 S20	33	1648	ACETONITRILE
L10CH	TU14 TU15 TE19 TE21 TT6	AT	1			CV1 CV13 CV28	S9 S17	66	1649	MOTOR FUEL ANTI-KNOCK MIXTURE
SGAH L4BH	TU15 TE15 TE19	AT	2	V11		CV13 CV28	S9 S19	60	1650	beta-NAPHTHYLAMINE, SOLID
SGAH	TU15 TE15 TE19	AT	2	V11		CV13 CV28	S9 S19	60	1651	NAPHTHYLTHIOUREA
SGAH	TU15 TE15 TE19	AT	2	V11		CV13 CV28	S9 S19	60	1652	NAPHTHYLUREA
SGAH L4BH	TU15 TE15 TE19	AT	2	V11		CV13 CV28	S9 S19	60	1653	NICKEL CYANIDE
L4BH	TU15 TE15 TE19	AT	2			CV13 CV28	S9 S19	60	1654	NICOTINE
S10AH L10CH	TU15 TE19	AT	1	V10 V12		CV1 CV13 CV28	S9 S17	66	1655	NICOTINE COMPOUND, SOLID, N.O.S. or NICOTINE PREPARATION, SOLID, N.O.S.
SGAH L4BH	TU15 TE15 TE19	AT	2	V11		CV13 CV28	S9 S19	60	1655	NICOTINE COMPOUND, SOLID, N.O.S. or NICOTINE PREPARATION, SOLID, N.O.S.
SGAH L4BH	TU15 TE15 TE19	AT	2		VV9b	CV13 CV28	S9	60	1655	NICOTINE COMPOUND, SOLID, N.O.S. or NICOTINE PREPARATION, SOLID, N.O.S.
L4BH	TU15 TE15 TE19	AT	2			CV13 CV28 CV31	S9 S19	60	1656	NICOTINE HYDROCHLORIDE, LIQUID or SOLUTION
L4BH	TU15 TE15 TE19	AT	2			CV13 CV28 CV31	S9	60	1656	NICOTINE HYDROCHLORIDE, LIQUID or SOLUTION
SGAH L4BH	TU15 TE15 TE19	AT	2	V11		CV13 CV28	S9 S19	60	1657	NICOTINE SALICYLATE
L4BH	TU15 TE15 TE19	AT	2			CV13 CV28 CV31	S9 S19	60	1658	NICOTINE SULPHATE, SOLUTION
L4BH	TU15 TE15 TE19	AT	2			CV13 CV28 CV31	S9	60	1658	NICOTINE SULPHATE, SOLUTION
SGAH L4BH	TU15 TE15 TE19	AT	2	V11		CV13 CV28	S9 S19	60	1659	NICOTINE TARTRATE
			1			CV9 CV10 CV36	S7 S17		1660	NITRIC OXIDE, COMPRESSED
SGAH L4BH	TU15 TE15 TE19	AT	2	V11		CV13 CV28	S9 S19	60	1661	NITROANILINES (o-, m-, p-)
L4BH	TU15 TE15 TE19	AT	2			CV13 CV28	S9 S19	60	1662	NITROBENZENE
SGAH L4BH	TU15 TE15 TE19	AT	2		VV9b	CV13 CV28	S9	60	1663	NITROPHENOLS (o-, m-, p-)
L4BH	TU15 TE15 TE19	AT	2			CV13 CV28	S9 S19	60	1664	NITROTOLUENES, LIQUID
L4BH	TU15 TE15 TE19	AT	2			CV13 CV28	S9 S19	60	1665	NITROXYLENES, LIQUID

UN No.	Name and description	Class	Classification code	Packing group	Labels	Special provisions	Limited quantities	Packaging			Portable tanks and bulk containers	
								Packing instructions	Special packing provisions	Mixed packing provisions	Instructions	Special provisions
	3.1.2	2.2	2.2	2.1.1.3	5.2.2	3.3	3.4.6	4.1.4	4.1.4	4.1.10	4.2.5.2 7.3.2	4.2.5.3
(1)	(2)	(3a)	(3b)	(4)	(5)	(6)	(7)	(8)	(9a)	(9b)	(10)	(11)
1669	PENTACHLOROETHANE	6.1	T1	II	6.1		LQ17	P001 IBC02		MP15	T7	TP2
1670	PERCHLOROMETHYL MERCAPTAN	6.1	T1	I	6.1		LQ0	P602		MP8 MP17	T14	TP2
1671	PHENOL, SOLID	6.1	T2	II	6.1	279	LQ18	P002 IBC08	B4	MP10	T3	TP33
1672	PHENYLCARBYLAMINE CHLORIDE	6.1	T1	I	6.1		LQ0	P602		MP8 MP17	T14	TP2
1673	PHENYLENEDIAMINES (o-, m-, p-)	6.1	T2	III	6.1	279	LQ9	P002 IBC08 LP02 R001	B3	MP10	T1	TP33
1674	PHENYLMERCURIC ACETATE	6.1	T3	II	6.1	43	LQ18	P002 IBC08	B4	MP10	T3	TP33
1677	POTASSIUM ARSENATE	6.1	T5	II	6.1		LQ18	P002 IBC08	B4	MP10	T3	TP33
1678	POTASSIUM ARSENITE	6.1	T5	II	6.1		LQ18	P002 IBC08	B4	MP10	T3	TP33
1679	POTASSIUM CUPROCYANIDE	6.1	T5	II	6.1		LQ18	P002 IBC08	B4	MP10	T3	TP33
1680	POTASSIUM CYANIDE, SOLID	6.1	T5	I	6.1		LQ0	P002 IBC07		MP18	T6	TP33
1683	SILVER ARSENITE	6.1	T5	II	6.1		LQ18	P002 IBC08	B4	MP10	T3	TP33
1684	SILVER CYANIDE	6.1	T5	II	6.1		LQ18	P002 IBC08	B4	MP10	T3	TP33
1685	SODIUM ARSENATE	6.1	T5	II	6.1		LQ18	P002 IBC08	B4	MP10	T3	TP33
1686	SODIUM ARSENITE, AQUEOUS SOLUTION	6.1	T4	II	6.1	43	LQ17	P001 IBC02		MP15	T7	TP2
1686	SODIUM ARSENITE, AQUEOUS SOLUTION	6.1	T4	III	6.1	43	LQ19	P001 IBC03 LP01 R001		MP15	T4	TP2
1687	SODIUM AZIDE	6.1	T5	II	6.1		LQ18	P002 IBC08	B4	MP10		
1688	SODIUM CACODYLATE	6.1	T5	II	6.1		LQ18	P002 IBC08	B4	MP10	T3	TP33
1689	SODIUM CYANIDE, SOLID	6.1	T5	I	6.1		LQ0	P002 IBC07		MP18	T6	TP33
1690	SODIUM FLUORIDE, SOLID	6.1	T5	III	6.1		LQ9	P002 IBC08 LP02 R001	B3	MP10	T1	TP33
1691	STRONTIUM ARSENITE	6.1	T5	II	6.1		LQ18	P002 IBC08	B4	MP10	T3	TP33
1692	STRYCHNINE or STRYCHNINE SALTS	6.1	T2	I	6.1		LQ0	P002 IBC07		MP18	T6	TP33
1693	TEAR GAS SUBSTANCE, LIQUID, N.O.S.	6.1	T1	I	6.1	274	LQ0	P001		MP8 MP17		
1693	TEAR GAS SUBSTANCE, LIQUID, N.O.S.	6.1	T1	II	6.1	274	LQ17	P001 IBC02		MP15		
1694	BROMOBENZYL CYANIDES, LIQUID	6.1	T1	I	6.1	138	LQ0	P001		MP8 MP17	T14	TP2
1695	CHLOROACETONE, STABILIZED	6.1	TFC	I	6.1 +3 +8		LQ0	P001		MP8 MP17	T14	TP2
1697	CHLOROACETOPHENONE, SOLID	6.1	T2	II	6.1		LQ18	P002 IBC08	B4	MP10	T3	TP33

ADR tank		Vehicle for tank carriage	Transport category	Special provisions for carriage				Hazard identifi-cation No.	UN No.	Name and description
Tank code	Special provisions			Packages	Bulk	Loading, unloading and handling	Operation			
4.3	4.3.5, 6.8.4	9.1.1.2	1.1.3.6	7.2.4	7.3.3	7.5.11	8.5	5.3.2.3		3.1.2
(12)	(13)	(14)	(15)	(16)	(17)	(18)	(19)	(20)	(1)	(2)
L4BH	TU15 TE15 TE19	AT	2			CV13 CV28	S9 S19	60	1669	PENTACHLOROETHANE
L10CH	TU14 TU15 TE19 TE21	AT	1			CV1 CV13 CV28	S9 S17	66	1670	PERCHLOROMETHYL MERCAPTAN
SGAH	TU15 TE15 TE19	AT	2	V11		CV13 CV28	S9 S19	60	1671	PHENOL, SOLID
L10CH	TU14 TU15 TE19 TE21	AT	1			CV1 CV13 CV28	S9 S17	66	1672	PHENYLCARBYLAMINE CHLORIDE
SGAH L4BH	TU15 TE15 TE19	AT	2		VV9b	CV13 CV28	S9	60	1673	PHENYLENEDIAMINES (o-, m-, p-)
SGAH L4BH	TU15 TE15 TE19	AT	2	V11		CV13 CV28	S9 S19	60	1674	PHENYLMERCURIC ACETATE
SGAH	TU15 TE15 TE19	AT	2	V11		CV13 CV28	S9 S19	60	1677	POTASSIUM ARSENATE
SGAH	TU15 TE15 TE19	AT	2	V11		CV13 CV28	S9 S19	60	1678	POTASSIUM ARSENITE
SGAH	TU15 TE15 TE19	AT	2	V11		CV13 CV28	S9 S19	60	1679	POTASSIUM CUPROCYANIDE
S10AH	TU15 TE19	AT	1	V10 V12		CV1 CV13 CV28	S9 S17	66	1680	POTASSIUM CYANIDE, SOLID
SGAH	TU15 TE15 TE19	AT	2	V11		CV13 CV28	S9 S19	60	1683	SILVER ARSENITE
SGAH	TU15 TE15 TE19	AT	2	V11		CV13 CV28	S9 S19	60	1684	SILVER CYANIDE
SGAH	TU15 TE15 TE19	AT	2	V11		CV13 CV28	S9 S19	60	1685	SODIUM ARSENATE
L4BH	TU15 TE15 TE19	AT	2			CV13 CV28	S9 S19	60	1686	SODIUM ARSENITE, AQUEOUS SOLUTION
L4BH	TU15 TE15 TE19	AT	2			CV13 CV28	S9	60	1686	SODIUM ARSENITE, AQUEOUS SOLUTION
			2	V11		CV13 CV28	S9 S19		1687	SODIUM AZIDE
SGAH	TU15 TE15 TE19	AT	2	V11		CV13 CV28	S9 S19	60	1688	SODIUM CACODYLATE
S10AH	TU15 TE19	AT	1	V10 V12		CV1 CV13 CV28	S9 S17	66	1689	SODIUM CYANIDE, SOLID
SGAH	TU15 TE15 TE19	AT	2		VV9b	CV13 CV28	S9	60	1690	SODIUM FLUORIDE, SOLID
SGAH	TU15 TE15 TE19	AT	2	V11		CV13 CV28	S9 S19	60	1691	STRONTIUM ARSENITE
S10AH	TU15 TE19	AT	1	V10 V12		CV1 CV13 CV28	S9 S17	66	1692	STRYCHNINE or STRYCHNINE SALTS
L10CH	TU14 TU15 TE19 TE21	AT	1			CV1 CV13 CV28	S9 S17	66	1693	TEAR GAS SUBSTANCE, LIQUID, N.O.S.
L4BH	TU15 TE15 TE19	AT	2			CV13 CV28	S9 S19	60	1693	TEAR GAS SUBSTANCE, LIQUID, N.O.S.
L10CH	TU14 TU15 TE19 TE21	AT	1			CV1 CV13 CV28	S9 S17	66	1694	BROMOBENZYL CYANIDES, LIQUID
L10CH	TU14 TU15 TE19 TE21	FL	1			CV1 CV13 CV28	S2 S9 S17	663	1695	CHLOROACETONE, STABILIZED
SGAH L4BH	TU15 TE15 TE19	AT	2	V11		CV13 CV28	S9 S19	60	1697	CHLOROACETOPHENONE, SOLID

UN No.	Name and description	Class	Classification code	Packing group	Labels	Special provisions	Limited quantities	Packaging			Portable tanks and bulk containers	
								Packing instructions	Special packing provisions	Mixed packing provisions	Instructions	Special provisions
	3.1.2	2.2	2.2	2.1.1.3	5.2.2	3.3	3.4.6	4.1.4	4.1.4	4.1.10	4.2.5.2 7.3.2	4.2.5.3
(1)	(2)	(3a)	(3b)	(4)	(5)	(6)	(7)	(8)	(9a)	(9b)	(10)	(11)
1698	DIPHENYLAMINE CHLOROARSINE	6.1	T3	I	6.1		LQ0	P002		MP18	T6	TP33
1699	DIPHENYLCHLORO-ARSINE, LIQUID	6.1	T3	I	6.1		LQ0	P001		MP8 MP17		
1700	TEAR GAS CANDLES	6.1	TF3	II	6.1 +4.1		LQ18	P600				
1701	XYLYL BROMIDE, LIQUID	6.1	T1	II	6.1		LQ17	P001 IBC02		MP15	T7	TP2
1702	1,1,2,2-TETRACHLOROETHANE	6.1	T1	II	6.1		LQ17	P001 IBC02		MP15	T7	TP2
1704	TETRAETHYL DITHIOPYROPHOSPHATE	6.1	T2	II	6.1	43	LQ18	P001 IBC02		MP10	T7	TP2
1707	THALLIUM COMPOUND, N.O.S.	6.1	T5	II	6.1	43 274	LQ18	P002 IBC08	B4	MP10	T3	TP33
1708	TOLUIDINES, LIQUID	6.1	T1	II	6.1	279	LQ17	P001 IBC02		MP15	T7	TP2
1709	2,4-TOLUYLENEDIAMINE, SOLID	6.1	T2	III	6.1		LQ9	P002 IBC08 LP02 R001	B3	MP10	T1	TP33
1710	TRICHLOROETHYLENE	6.1	T1	III	6.1		LQ19	P001 IBC03 LP01 R001		MP15	T4	TP1
1711	XYLIDINES, LIQUID	6.1	T1	II	6.1		LQ17	P001 IBC02		MP15	T7	TP2
1712	ZINC ARSENATE, ZINC ARSENITE or ZINC ARSENATE AND ZINC ARSENITE MIXTURE	6.1	T5	II	6.1		LQ18	P002 IBC08	B4	MP10	T3	TP33
1713	ZINC CYANIDE	6.1	T5	I	6.1		LQ0	P002 IBC07		MP18	T6	TP33
1714	ZINC PHOSPHIDE	4.3	WT2	I	4.3 +6.1		LQ0	P403		MP2		
1715	ACETIC ANHYDRIDE	8	CF1	II	8 +3		LQ22	P001 IBC02		MP15	T7	TP2
1716	ACETYL BROMIDE	8	C3	II	8		LQ22	P001 IBC02		MP15	T8	TP2 TP12
1717	ACETYL CHLORIDE	3	FC	II	3 +8		LQ4	P001 IBC02		MP19	T8	TP2 TP12
1718	BUTYL ACID PHOSPHATE	8	C3	III	8		LQ19	P001 IBC03 LP01 R001		MP15	T4	TP1
1719	CAUSTIC ALKALI LIQUID, N.O.S.	8	C5	II	8	274	LQ22	P001 IBC02		MP15	T11	TP2 TP27
1719	CAUSTIC ALKALI LIQUID, N.O.S.	8	C5	III	8	274	LQ19	P001 IBC03 R001		MP15	T7	TP1 TP28
1722	ALLYL CHLOROFORMATE	6.1	TFC	I	6.1 +3 +8		LQ0	P001		MP8 MP17	T14	TP2
1723	ALLYL IODIDE	3	FC	II	3 +8		LQ4	P001 IBC02		MP19	T7	TP2
1724	ALLYLTRICHLOROSILANE, STABILIZED	8	CF1	II	8 +3		LQ22	P001 IBC02		MP15	T7	TP2
1725	ALUMINIUM BROMIDE, ANHYDROUS	8	C2	II	8	588	LQ23	P002 IBC08	B4	MP10	T3	TP33
1726	ALUMINIUM CHLORIDE, ANHYDROUS	8	C2	II	8	588	LQ23	P002 IBC08	B4	MP10	T3	TP33
1727	AMMONIUM HYDROGENDIFLUORIDE, SOLID	8	C2	II	8		LQ23	P002 IBC08	B4	MP10	T3	TP33

ADR tank		Vehicle for tank carriage	Transport category	Special provisions for carriage				Hazard identifi-cation No.	UN No.	Name and description
Tank code	Special provisions			Packages	Bulk	Loading, unloading and handling	Operation			
4.3	4.3.5, 6.8.4	9.1.1.2	1.1.3.6	7.2.4	7.3.3	7.5.11	8.5	5.3.2.3		3.1.2
(12)	(13)	(14)	(15)	(16)	(17)	(18)	(19)	(20)	(1)	(2)
S10AH	TU15 TE19	AT	1			CV1 CV13 CV28	S9 S17	66	1698	DIPHENYLAMINE CHLOROARSINE
L10CH	TU14 TU15 TE19 TE21	AT	1			CV1 CV13 CV28	S9 S17	66	1699	DIPHENYLCHLORO-ARSINE, LIQUID
			2			CV13 CV28	S9 S19		1700	TEAR GAS CANDLES
L4BH	TU15 TE15 TE19	AT	2			CV13 CV28	S9 S19	60	1701	XYLYL BROMIDE, LIQUID
L4BH	TU15 TE15 TE19	AT	2			CV13 CV28	S9 S19	60	1702	1,1,2,2-TETRACHLOROETHANE
SGAH L4BH	TU15 TE15 TE19	AT	2	V11		CV13 CV28	S9 S19	60	1704	TETRAETHYL DITHIOPYROPHOSPHATE
SGAH L4BH	TU15 TE15 TE19	AT	2	V11		CV13 CV28	S9 S19	60	1707	THALLIUM COMPOUND, N.O.S.
L4BH	TU15 TE15 TE19	AT	2			CV13 CV28	S9 S19	60	1708	TOLUIDINES, LIQUID
SGAH L4BH	TU15 TE15 TE19	AT	2		VV9b	CV13 CV28	S9	60	1709	2,4-TOLUYLENEDIAMINE, SOLID
L4BH	TU15 TE15 TE19	AT	2			CV13 CV28	S9	60	1710	TRICHLOROETHYLENE
L4BH	TU15 TE15 TE19	AT	2			CV13 CV28	S9 S19	60	1711	XYLIDINES, LIQUID
SGAH	TU15 TE15 TE19	AT	2	V11		CV13 CV28	S9 S19	60	1712	ZINC ARSENATE, ZINC ARSENITE or ZINC ARSENATE AND ZINC ARSENITE MIXTURE
S10AH	TU15 TE19	AT	1	V10 V12		CV1 CV13 CV28	S9 S17	66	1713	ZINC CYANIDE
			1	V1		CV23 CV28	S20		1714	ZINC PHOSPHIDE
L4BN		FL	2				S2	83	1715	ACETIC ANHYDRIDE
L4BN		AT	2					80	1716	ACETYL BROMIDE
L4BH	TE15	FL	2				S2 S20	X338	1717	ACETYL CHLORIDE
L4BN		AT	3					80	1718	BUTYL ACID PHOSPHATE
L4BN		AT	2					80	1719	CAUSTIC ALKALI LIQUID, N.O.S.
L4BN		AT	3					80	1719	CAUSTIC ALKALI LIQUID, N.O.S.
L10CH	TU14 TU15 TE19 TE21	FL	1			CV1 CV13 CV28	S2 S9 S17	668	1722	ALLYL CHLOROFORMATE
L4BH	TE15	FL	2				S2 S20	338	1723	ALLYL IODIDE
L4BN		FL	2				S2	X839	1724	ALLYLTRICHLOROSILANE, STABILIZED
SGAN		AT	2	V11				80	1725	ALUMINIUM BROMIDE, ANHYDROUS
SGAN		AT	2	V11				80	1726	ALUMINIUM CHLORIDE, ANHYDROUS
SGAN		AT	2	V11				80	1727	AMMONIUM HYDROGENDIFLUORIDE, SOLID

UN No.	Name and description	Class	Classification code	Packing group	Labels	Special provisions	Limited quantities	Packaging			Portable tanks and bulk containers	
								Packing instructions	Special packing provisions	Mixed packing provisions	Instructions	Special provisions
	3.1.2	2.2	2.2	2.1.1.3	5.2.2	3.3	3.4.6	4.1.4	4.1.4	4.1.10	4.2.5.2 7.3.2	4.2.5.3
(1)	(2)	(3a)	(3b)	(4)	(5)	(6)	(7)	(8)	(9a)	(9b)	(10)	(11)
1728	AMYLTRICHLOROSILANE	8	C3	II	8		LQ22	P001 IBC02		MP15	T7	TP2
1729	ANISOYL CHLORIDE	8	C4	II	8		LQ23	P002 IBC08	B4	MP10	T3	TP33
1730	ANTIMONY PENTACHLORIDE, LIQUID	8	C1	II	8		LQ22	P001 IBC02		MP15	T7	TP2
1731	ANTIMONY PENTACHLORIDE SOLUTION	8	C1	II	8		LQ22	P001 IBC02		MP15	T7	TP2
1731	ANTIMONY PENTACHLORIDE SOLUTION	8	C1	III	8		LQ19	P001 IBC03 LP01 R001		MP15	T4	TP1
1732	ANTIMONY PENTAFLUORIDE	8	CT1	II	8 +6.1		LQ22	P001 IBC02		MP15	T7	TP2
1733	ANTIMONY TRICHLORIDE	8	C2	II	8		LQ23	P002 IBC08	B4	MP10		
1736	BENZOYL CHLORIDE	8	C3	II	8		LQ22	P001 IBC02		MP15	T8	TP2 TP12
1737	BENZYL BROMIDE	6.1	TC1	II	6.1 +8		LQ17	P001 IBC02		MP15	T8	TP2 TP12
1738	BENZYL CHLORIDE	6.1	TC1	II	6.1 +8		LQ17	P001 IBC02		MP15	T8	TP2 TP12
1739	BENZYL CHLOROFORMATE	8	C9	I	8		LQ0	P001		MP8 MP17	T10	TP2 TP12
1740	HYDROGENDIFLUORIDES, N.O.S.	8	C2	II	8	274 517	LQ23	P002 IBC08	B4	MP10	T3	TP33
1740	HYDROGENDIFLUORIDES, N.O.S.	8	C2	III	8	274 517	LQ24	P002 IBC08 LP02 R001	B3	MP10	T1	TP33
1741	BORON TRICHLORIDE	2	2TC		2.3 +8		LQ0	P200		MP9	(M)	
1742	BORON TRIFLUORIDE ACETIC ACID COMPLEX, LIQUID	8	C3	II	8		LQ22	P001 IBC02		MP15	T8	TP2 TP12
1743	BORON TRIFLUORIDE PROPIONIC ACID COMPLEX, LIQUID	8	C3	II	8		LQ22	P001 IBC02		MP15	T8	TP2 TP12
1744	BROMINE or BROMINE SOLUTION	8	CT1	I	8 +6.1		LQ0	P601 PR6	PP82	MP2	T22	TP2 TP10 TP12
1745	BROMINE PENTAFLUORIDE	5.1	OTC	I	5.1 +6.1 +8		LQ0	P200		MP2	T22	TP2 TP12
1746	BROMINE TRIFLUORIDE	5.1	OTC	I	5.1 +6.1 +8		LQ0	P200		MP2	T22	TP2 TP12
1747	BUTYLTRICHLOROSILANE	8	CF1	II	8 +3		LQ22	P001 IBC02		MP15	T7	TP2
1748	CALCIUM HYPOCHLORITE, DRY or CALCIUM HYPOCHLORITE MIXTURE, DRY with more than 39% available chlorine (8.8% available oxygen)	5.1	O2	II	5.1	313 314 589	LQ11	P002 IBC08	B4, B13	MP10		
1748	CALCIUM HYPOCHLORITE, DRY or CALCIUM HYPOCHLORITE MIXTURE, DRY with more than 39% available chlorine (8.8% available oxygen)	5.1	O2	III	5.1	316 589	LQ12	P002 IBC08 R001	B4	MP10		

ADR tank		Vehicle for tank carriage	Transport category	Special provisions for carriage				Hazard identifi-cation No.	UN No.	Name and description
Tank code	Special provisions			Packages	Bulk	Loading, unloading and handling	Operation			
4.3	4.3.5, 6.8.4	9.1.1.2	1.1.3.6	7.2.4	7.3.3	7.5.11	8.5	5.3.2.3		3.1.2
(12)	(13)	(14)	(15)	(16)	(17)	(18)	(19)	(20)	(1)	(2)
L4BN		AT	2					X80	1728	AMYLTRICHLOROSILANE
SGAN L4BN		AT	2	V11				80	1729	ANISOYL CHLORIDE
L4BN		AT	2					X80	1730	ANTIMONY PENTACHLORIDE, LIQUID
L4BN		AT	2					80	1731	ANTIMONY PENTACHLORIDE SOLUTION
L4BN		AT	3					80	1731	ANTIMONY PENTACHLORIDE SOLUTION
L4BN		AT	2			CV13 CV28		86	1732	ANTIMONY PENTAFLUORIDE
L4BN SGAN		AT	2	V11				80	1733	ANTIMONY TRICHLORIDE
L4BN		AT	2					80	1736	BENZOYL CHLORIDE
L4BH	TU15 TE15 TE19	AT	2			CV13 CV28	S9 S19	68	1737	BENZYL BROMIDE
L4BH	TU15 TE15 TE19	AT	2			CV13 CV28	S9 S19	68	1738	BENZYL CHLORIDE
L10BH		AT	1				S20	88	1739	BENZYL CHLOROFORMATE
SGAN		AT	2	V11				80	1740	HYDROGENDIFLUORIDES, N.O.S.
SGAV		AT	3		VV9b			80	1740	HYDROGENDIFLUORIDES, N.O.S.
		AT	1			CV9 CV10 CV36	S7 S17	268	1741	BORON TRICHLORIDE
L4BN		AT	2					80	1742	BORON TRIFLUORIDE ACETIC ACID COMPLEX, LIQUID
L4BN		AT	2					80	1743	BORON TRIFLUORIDE PROPIONIC ACID COMPLEX, LIQUID
L21DH(+)	TU14 TU33 TC5 TE21 TT2 TM3 TM5	AT	1			CV13 CV28	S17	886	1744	BROMINE or BROMINE SOLUTION
L10DH	TU3	AT	1			CV24 CV28	S20	568	1745	BROMINE PENTAFLUORIDE
L10DH	TU3	AT	1			CV24 CV28	S20	568	1746	BROMINE TRIFLUORIDE
L4BN		FL	2				S2	X83	1747	BUTYLTRICHLOROSILANE
SGAN	TU3	AT	2	V11		CV24 CV35		50	1748	CALCIUM HYPOCHLORITE, DRY or CALCIUM HYPOCHLORITE MIXTURE, DRY with more than 39% available chlorine (8.8% available oxygen)
SGAV	TU3	AT	3			CV24 CV35		50	1748	CALCIUM HYPOCHLORITE, DRY or CALCIUM HYPOCHLORITE MIXTURE, DRY with more than 39% available chlorine (8.8% available oxygen)

UN No.	Name and description	Class	Classification code	Packing group	Labels	Special provisions	Limited quantities	Packaging			Portable tanks and bulk containers	
								Packing instructions	Special packing provisions	Mixed packing provisions	Instructions	Special provisions
	3.1.2	2.2	2.2	2.1.1.3	5.2.2	3.3	3.4.6	4.1.4	4.1.4	4.1.10	4.2.5.2 7.3.2	4.2.5.3
(1)	(2)	(3a)	(3b)	(4)	(5)	(6)	(7)	(8)	(9a)	(9b)	(10)	(11)
1749	CHLORINE TRIFLUORIDE	2	2TOC		2.3 +5.1 +8		LQ0	P200		MP9	(M)	
1750	CHLOROACETIC ACID SOLUTION	6.1	TC1	II	6.1 +8		LQ17	P001 IBC02		MP15	T7	TP2
1751	CHLOROACETIC ACID, SOLID	6.1	TC2	II	6.1 +8		LQ18	P002 IBC08	B4	MP10	T3	TP33
1752	CHLOROACETYL CHLORIDE	6.1	TC1	I	6.1 +8		LQ0	P001		MP8 MP17	T14	TP2
1753	CHLOROPHENYL-TRICHLOROSILANE	8	C3	II	8		LQ22	P001 IBC02		MP15	T7	TP2
1754	CHLOROSULPHONIC ACID (with or without sulphur trioxide)	8	C1	I	8		LQ0	P001		MP8 MP17	T20	TP2 TP12
1755	CHROMIC ACID SOLUTION	8	C1	II	8	518	LQ22	P001 IBC02		MP15	T8	TP2 TP12
1755	CHROMIC ACID SOLUTION	8	C1	III	8	518	LQ19	P001 IBC02 LP01 R001		MP15	T4	TP1 TP12
1756	CHROMIC FLUORIDE, SOLID	8	C2	II	8		LQ23	P002 IBC08	B4	MP10	T3	TP33
1757	CHROMIC FLUORIDE SOLUTION	8	C1	II	8		LQ22	P001 IBC02		MP15	T7	TP2
1757	CHROMIC FLUORIDE SOLUTION	8	C1	III	8		LQ19	P001 IBC03 LP01 R001		MP15	T4	TP1
1758	CHROMIUM OXYCHLORIDE	8	C1	I	8		LQ0	P001		MP8 MP17	T10	TP2 TP12
1759	CORROSIVE SOLID, N.O.S.	8	C10	I	8	274	LQ0	P002 IBC07		MP18	T6	TP9 TP33
1759	CORROSIVE SOLID, N.O.S.	8	C10	II	8	274	LQ23	P002 IBC08	B4	MP10	T3	TP33
1759	CORROSIVE SOLID, N.O.S.	8	C10	III	8	274	LQ24	P002 IBC08 LP02 R001	B3	MP10	T1	TP33
1760	CORROSIVE LIQUID, N.O.S.	8	C9	I	8	274	LQ0	P001		MP8 MP17	T14	TP2 TP9 TP27
1760	CORROSIVE LIQUID, N.O.S.	8	C9	II	8	274	LQ22	P001 IBC02		MP15	T11	TP2 TP27
1760	CORROSIVE LIQUID, N.O.S.	8	C9	III	8	274	LQ19	P001 IBC03 LP01 R001		MP15	T7	TP1 TP28
1761	CUPRIETHYLENEDIAMINE SOLUTION	8	CT1	II	8 +6.1		LQ22	P001 IBC02		MP15	T7	TP2
1761	CUPRIETHYLENEDIAMINE SOLUTION	8	CT1	III	8 +6.1		LQ19	P001 IBC03 R001		MP15	T7	TP1 TP28
1762	CYCLOHEXENYL-TRICHLOROSILANE	8	C3	II	8		LQ22	P001 IBC02		MP15	T7	TP2
1763	CYCLOHEXYLTRICHLORO-SILANE	8	C3	II	8		LQ22	P001 IBC02		MP15	T7	TP2
1764	DICHLOROACETIC ACID	8	C3	II	8		LQ22	P001 IBC02		MP15	T8	TP2 TP12
1765	DICHLOROACETYL CHLORIDE	8	C3	II	8		LQ22	P001 IBC02		MP15	T7	TP2
1766	DICHLOROPHENYL-TRICHLOROSILANE	8	C3	II	8		LQ22	P001 IBC02		MP15	T7	TP2
1767	DIETHYLDICHLORO-SILANE	8	CF1	II	8 +3		LQ22	P001 IBC02		MP15	T7	TP2
1768	DIFLUOROPHOSPHORIC ACID, ANHYDROUS	8	C1	II	8		LQ22	P001 IBC02		MP15	T8	TP2 TP12

ADR tank		Vehicle for tank carriage	Transport category	Special provisions for carriage				Hazard identification No.	UN No.	Name and description
Tank code	Special provisions			Packages	Bulk	Loading, unloading and handling	Operation			
4.3	4.3.5, 6.8.4	9.1.1.2	1.1.3.6	7.2.4	7.3.3	7.5.11	8.5	5.3.2.3		3.1.2
(12)	(13)	(14)	(15)	(16)	(17)	(18)	(19)	(20)	(1)	(2)
PxBH(M)		AT	1			CV9 CV10 CV36	S7 S17	265	1749	CHLORINE TRIFLUORIDE
L4BH	TU15 TE15 TE19	AT	2			CV13 CV28	S9 S19	68	1750	CHLOROACETIC ACID SOLUTION
SGAH	TU15 TE15 TE19	AT	2			CV13 CV28	S9 S19	68	1751	CHLOROACETIC ACID, SOLID
L10CH	TU14 TU15 TE19 TE21	AT	1			CV1 CV13 CV28	S9 S17	668	1752	CHLOROACETYL CHLORIDE
L4BN		AT	2					X80	1753	CHLOROPHENYL-TRICHLOROSILANE
L10BH		AT	1				S20	X88	1754	CHLOROSULPHONIC ACID (with or without sulphur trioxide)
L4BN		AT	2					80	1755	CHROMIC ACID SOLUTION
L4BN		AT	3					80	1755	CHROMIC ACID SOLUTION
SGAN		AT	2	V11				80	1756	CHROMIC FLUORIDE, SOLID
L4BN		AT	2					80	1757	CHROMIC FLUORIDE SOLUTION
L4BN		AT	3					80	1757	CHROMIC FLUORIDE SOLUTION
L10BH		AT	1				S20	X88	1758	CHROMIUM OXYCHLORIDE
S10AN L10BH		AT	1	V10 V12			S20	88	1759	CORROSIVE SOLID, N.O.S.
SGAN L4BN		AT	2	V11				80	1759	CORROSIVE SOLID, N.O.S.
SGAV L4BN		AT	3		VV9b			80	1759	CORROSIVE SOLID, N.O.S.
L10BH		AT	1				S20	88	1760	CORROSIVE LIQUID, N.O.S.
L4BN		AT	2					80	1760	CORROSIVE LIQUID, N.O.S.
L4BN		AT	3					80	1760	CORROSIVE LIQUID, N.O.S.
L4BN		AT	2			CV13 CV28		86	1761	CUPRIETHYLENEDIAMINE SOLUTION
L4BN		AT	3			CV13 CV28		86	1761	CUPRIETHYLENEDIAMINE SOLUTION
L4BN		AT	2					X80	1762	CYCLOHEXENYL-TRICHLOROSILANE
L4BN		AT	2					X80	1763	CYCLOHEXYLTRICHLORO-SILANE
L4BN		AT	2					80	1764	DICHLOROACETIC ACID
L4BN		AT	2					X80	1765	DICHLOROACETYL CHLORIDE
L4BN		AT	2					X80	1766	DICHLOROPHENYL-TRICHLOROSILANE
L4BN		FL	2				S2	X83	1767	DIETHYLDICHLORO-SILANE
L4BN		AT	2					80	1768	DIFLUOROPHOSPHORIC ACID, ANHYDROUS

UN No.	Name and description	Class	Classification code	Packing group	Labels	Special provisions	Limited quantities	Packaging			Portable tanks and bulk containers	
								Packing instructions	Special packing provisions	Mixed packing provisions	Instructions	Special provisions
	3.1.2	2.2	2.2	2.1.1.3	5.2.2	3.3	3.4.6	4.1.4	4.1.4	4.1.10	4.2.5.2 7.3.2	4.2.5.3
(1)	(2)	(3a)	(3b)	(4)	(5)	(6)	(7)	(8)	(9a)	(9b)	(10)	(11)
1769	DIPHENYLDICHLORO-SILANE	8	C3	II	8		LQ22	P001 IBC02		MP15	T7	TP2
1770	DIPHENYLMETHYL BROMIDE	8	C10	II	8		LQ23	P002 IBC08	B4	MP10	T3	TP33
1771	DODECYLTRICHLORO-SILANE	8	C3	II	8		LQ22	P001 IBC02		MP15	T7	TP2
1773	FERRIC CHLORIDE, ANHYDROUS	8	C2	III	8	590	LQ24	P002 IBC08 LP02 R001	B3	MP10	T1	TP33
1774	FIRE EXTINGUISHER CHARGES, corrosive liquid	8	C11	II	8		LQ22	P001	PP4			
1775	FLUOROBORIC ACID	8	C1	II	8		LQ22	P001 IBC02		MP15	T7	TP2
1776	FLUOROPHOSPHORIC ACID, ANHYDROUS	8	C1	II	8		LQ22	P001 IBC02		MP15	T8	TP2 TP12
1777	FLUOROSULPHONIC ACID	8	C1	I	8		LQ0	P001		MP8 MP17	T10	TP2 TP12
1778	FLUOROSILICIC ACID	8	C1	II	8		LQ22	P001 IBC02		MP15	T8	TP2 TP12
1779	FORMIC ACID	8	C3	II	8		LQ22	P001 IBC02		MP15	T7	TP2
1780	FUMARYL CHLORIDE	8	C3	II	8		LQ22	P001 IBC02		MP15	T7	TP2
1781	HEXADECYLTRICHLORO-SILANE	8	C3	II	8		LQ22	P001 IBC02		MP15	T7	TP2
1782	HEXAFLUORO-PHOSPHORIC ACID	8	C1	II	8		LQ22	P001 IBC02		MP15	T8	TP2 TP12
1783	HEXAMETHYLENE-DIAMINE SOLUTION	8	C7	II	8		LQ22	P001 IBC02		MP15	T7	TP2
1783	HEXAMETHYLENE-DIAMINE SOLUTION	8	C7	III	8		LQ19	P001 IBC03 LP01 R001		MP15	T4	TP1
1784	HEXYLTRICHLOROSILANE	8	C3	II	8		LQ22	P001 IBC02		MP15	T7	TP2
1786	HYDROFLUORIC ACID AND SULPHURIC ACID MIXTURE	8	CT1	I	8 +6.1		LQ0	P001		MP8 MP17	T10	TP2 TP12
1787	HYDRIODIC ACID	8	C1	II	8		LQ22	P001 IBC02		MP15	T7	TP2
1787	HYDRIODIC ACID	8	C1	III	8		LQ19	P001 IBC03 LP01 R001		MP15	T4	TP1
1788	HYDROBROMIC ACID	8	C1	II	8	519	LQ22	P001 IBC02		MP15	T7	TP2
1788	HYDROBROMIC ACID	8	C1	III	8	519	LQ19	P001 IBC03 LP01 R001		MP15	T4	TP1
1789	HYDROCHLORIC ACID	8	C1	II	8	520	LQ22	P001 IBC02		MP15	T8	TP2 TP12
1789	HYDROCHLORIC ACID	8	C1	III	8	520	LQ19	P001 IBC03 LP01 R001		MP15	T4	TP1 TP12
1790	HYDROFLUORIC ACID with more than 85% hydrogen fluoride	8	CT1	I	8 +6.1	640I	LQ0	P802		MP2	T10	TP2 TP12
1790	HYDROFLUORIC ACID with more than 60% but not more than 85% hydrogen fluoride	8	CT1	I	8 +6.1	640J	LQ0	P001	PP81	MP8 MP17	T10	TP2 TP12
1790	HYDROFLUORIC ACID with not more than 60% hydrogen fluoride	8	CT1	II	8 +6.1		LQ22	P001 IBC02		MP15	T8	TP2 TP12

ADR tank		Vehicle for tank carriage	Transport category	Special provisions for carriage				Hazard identifi-cation No.	UN No.	Name and description
Tank code	Special provisions			Packages	Bulk	Loading, unloading and handling	Operation			
4.3	4.3.5, 6.8.4	9.1.1.2	1.1.3.6	7.2.4	7.3.3	7.5.11	8.5	5.3.2.3		3.1.2
(12)	(13)	(14)	(15)	(16)	(17)	(18)	(19)	(20)	(1)	(2)
L4BN		AT	2					X80	1769	DIPHENYLDICHLORO-SILANE
SGAN L4BN		AT	2	V11				80	1770	DIPHENYLMETHYL BROMIDE
L4BN		AT	2					X80	1771	DODECYLTRICHLORO-SILANE
SGAV		AT	3		VV9b			80	1773	FERRIC CHLORIDE, ANHYDROUS
			2						1774	FIRE EXTINGUISHER CHARGES, corrosive liquid
L4BN		AT	2					80	1775	FLUOROBORIC ACID
L4BN		AT	2					80	1776	FLUOROPHOSPHORIC ACID, ANHYDROUS
L10BH		AT	1				S20	88	1777	FLUOROSULPHONIC ACID
L4BN		AT	2					80	1778	FLUOROSILICIC ACID
L4BN		AT	2					80	1779	FORMIC ACID
L4BN		AT	2					80	1780	FUMARYL CHLORIDE
L4BN		AT	2					X80	1781	HEXADECYLTRICHLORO-SILANE
L4BN		AT	2					80	1782	HEXAFLUORO-PHOSPHORIC ACID
L4BN		AT	2					80	1783	HEXAMETHYLENE-DIAMINE SOLUTION
L4BN		AT	3					80	1783	HEXAMETHYLENE-DIAMINE SOLUTION
L4BN		AT	2					X80	1784	HEXYLTRICHLOROSILANE
L10DH	TU14 TE21	AT	1			CV13 CV28	S20	886	1786	HYDROFLUORIC ACID AND SULPHURIC ACID MIXTURE
L4BN		AT	2					80	1787	HYDRIODIC ACID
L4BN		AT	3					80	1787	HYDRIODIC ACID
L4BN		AT	2					80	1788	HYDROBROMIC ACID
L4BN		AT	3					80	1788	HYDROBROMIC ACID
L4BN		AT	2					80	1789	HYDROCHLORIC ACID
L4BN		AT	3					80	1789	HYDROCHLORIC ACID
L21DH(+)	TU14 TU34 TC1 TE21 TM3 TM5	AT	1			CV13 CV28	S17	886	1790	HYDROFLUORIC ACID with more than 85% hydrogen fluoride
L10DH	TU14 TE21	AT	1			CV13 CV28	S17	886	1790	HYDROFLUORIC ACID with more than 60% but not more than 85% hydrogen fluoride
L4DH	TU14 TE21	AT	2			CV13 CV28		86	1790	HYDROFLUORIC ACID with not more than 60% hydrogen fluoride

UN No.	Name and description	Class	Classification code	Packing group	Labels	Special provisions	Limited quantities	Packaging			Portable tanks and bulk containers	
								Packing instructions	Special packing provisions	Mixed packing provisions	Instructions	Special provisions
	3.1.2	2.2	2.2	2.1.1.3	5.2.2	3.3	3.4.6	4.1.4	4.1.4	4.1.10	4.2.5.2 7.3.2	4.2.5.3
(1)	(2)	(3a)	(3b)	(4)	(5)	(6)	(7)	(8)	(9a)	(9b)	(10)	(11)
1791	HYPOCHLORITE SOLUTION	8	C9	II	8	521	LQ22	P001 IBC02	PP10 B5	MP15	T7	TP2 TP24
1791	HYPOCHLORITE SOLUTION	8	C9	III	8	521	LQ19	P001 IBC02 LP01 R001	B5	MP15	T4	TP2 TP24
1792	IODINE MONOCHLORIDE	8	C1	II	8		LQ22	P001 IBC02		MP15	T7	TP2
1793	ISOPROPYL ACID PHOSPHATE	8	C3	III	8		LQ19	P001 IBC02 LP01 R001		MP15	T4	TP1
1794	LEAD SULPHATE with more than 3% free acid	8	C2	II	8	591	LQ23	P002 IBC08	B4	MP10	T3	TP33
1796	NITRATING ACID MIXTURE with more than 50% nitric acid	8	CO1	I	8 +5.1		LQ0	P001		MP8 MP17	T10	TP2 TP12
1796	NITRATING ACID MIXTURE with not more than 50% nitric acid	8	C1	II	8		LQ22	P001 IBC02		MP15	T8	TP2 TP12
1798	NITROHYDROCHLORIC ACID	8	COT	CARRIAGE PROHIBITED								
1799	NONYLTRICHLOROSILANE	8	C3	II	8		LQ22	P001 IBC02		MP15	T7	TP2
1800	OCTADECYLTRICHLORO-SILANE	8	C3	II	8		LQ22	P001 IBC02		MP15	T7	TP2
1801	OCTYLTRICHLOROSILANE	8	C3	II	8		LQ22	P001 IBC02		MP15	T7	TP2
1802	PERCHLORIC ACID with not more than 50% acid, by mass	8	CO1	II	8 +5.1	522	LQ22	P001 IBC02		MP3	T7	TP2
1803	PHENOLSULPHONIC ACID, LIQUID	8	C3	II	8		LQ22	P001 IBC02		MP15	T7	TP2
1804	PHENYLTRICHLORO-SILANE	8	C3	II	8		LQ22	P001 IBC02		MP15	T7	TP2
1805	PHOSPHORIC ACID, SOLUTION	8	C1	III	8		LQ19	P001 IBC03 LP01 R001		MP15	T4	TP1
1806	PHOSPHORUS PENTACHLORIDE	8	C2	II	8		LQ23	P002 IBC08	B4	MP10	T3	TP33
1807	PHOSPHORUS PENTOXIDE	8	C2	II	8		LQ23	P002 IBC08	B4	MP10	T3	TP33
1808	PHOSPHORUS TRIBROMIDE	8	C1	II	8		LQ22	P001 IBC02		MP15	T7	TP2
1809	PHOSPHORUS TRICHLORIDE	6.1	TC3	I	6.1 +8		LQ0	P001		MP8 MP19	T14	TP2
1810	PHOSPHORUS OXYCHLORIDE	8	C1	II	8		LQ22	P001		MP15	T7	TP2
1811	POTASSIUM HYDROGENDIFLUORIDE SOLID	8	CT2	II	8 +6.1		LQ23	P002 IBC08	B4	MP10	T3	TP33
1812	POTASSIUM FLUORIDE, SOLID	6.1	T5	III	6.1		LQ9	P002 IBC08 LP02 R001	B3	MP10	T1	TP33
1813	POTASSIUM HYDROXIDE, SOLID	8	C6	II	8		LQ23	P002 IBC08	B4	MP10	T3	TP33
1814	POTASSIUM HYDROXIDE SOLUTION	8	C5	II	8		LQ22	P001 IBC02		MP15	T7	TP2
1814	POTASSIUM HYDROXIDE SOLUTION	8	C5	III	8		LQ19	P001 IBC03 LP01 R001		MP15	T4	TP1
1815	PROPIONYL CHLORIDE	3	FC	II	3 +8		LQ4	P001 IBC02		MP19	T7	TP1

ADR tank		Vehicle for tank carriage	Transport category	Special provisions for carriage				Hazard identification No.	UN No.	Name and description
Tank code	Special provisions			Packages	Bulk	Loading, unloading and handling	Operation			
4.3	4.3.5, 6.8.4	9.1.1.2	1.1.3.6	7.2.4	7.3.3	7.5.11	8.5	5.3.2.3		3.1.2
(12)	(13)	(14)	(15)	(16)	(17)	(18)	(19)	(20)	(1)	(2)
L4BV(+)	TE11	AT	2					80	1791	HYPOCHLORITE SOLUTION
L4BV(+)	TE11	AT	3					80	1791	HYPOCHLORITE SOLUTION
L4BN		AT	2	V11				80	1792	IODINE MONOCHLORIDE
L4BN		AT	3					80	1793	ISOPROPYL ACID PHOSPHATE
SGAN		AT	2	V11	VV9a			80	1794	LEAD SULPHATE with more than 3% free acid
L10BH	TC6 TT1	AT	1			CV24	S20	885	1796	NITRATING ACID MIXTURE with more than 50% nitric acid
L4BN		AT	2					80	1796	NITRATING ACID MIXTURE with not more than 50% nitric acid
CARRIAGE PROHIBITED									1798	NITROHYDROCHLORIC ACID
L4BN		AT	2					X80	1799	NONYLTRICHLOROSILANE
L4BN		AT	2					X80	1800	OCTADECYLTRICHLORO-SILANE
L4BN		AT	2					X80	1801	OCTYLTRICHLOROSILANE
L4BN		AT	2			CV24		85	1802	PERCHLORIC ACID with not more than 50% acid, by mass
L4BN		AT	2					80	1803	PHENOLSULPHONIC ACID, LIQUID
L4BN		AT	2					X80	1804	PHENYLTRICHLORO-SILANE
L4BN		AT	3					80	1805	PHOSPHORIC ACID, SOLUTION
SGAN		AT	2	V11				80	1806	PHOSPHORUS PENTACHLORIDE
SGAN		AT	2	V11				80	1807	PHOSPHORUS PENTOXIDE
L4BN		AT	2					X80	1808	PHOSPHORUS TRIBROMIDE
L10CH	TU14 TU15 TE19 TE21	AT	1			CV1 CV13 CV28	S9 S17	668	1809	PHOSPHORUS TRICHLORIDE
L4BN		AT	2					X80	1810	PHOSPHORUS OXYCHLORIDE
SGAN		AT	2	V11		CV13 CV28		86	1811	POTASSIUM HYDROGENDIFLUORIDE SOLID
SGAH	TU15 TE15 TE19	AT	2		VV9b	CV13 CV28	S9	60	1812	POTASSIUM FLUORIDE, SOLID
SGAN		AT	2	V11				80	1813	POTASSIUM HYDROXIDE, SOLID
L4BN		AT	2					80	1814	POTASSIUM HYDROXIDE SOLUTION
L4BN		AT	3					80	1814	POTASSIUM HYDROXIDE SOLUTION
L4BH	TE15	FL	2				S2 S20	338	1815	PROPIONYL CHLORIDE

UN No.	Name and description	Class	Classification code	Packing group	Labels	Special provisions	Limited quantities	Packaging			Portable tanks and bulk containers	
								Packing instructions	Special packing provisions	Mixed packing provisions	Instructions	Special provisions
	3.1.2	2.2	2.2	2.1.1.3	5.2.2	3.3	3.4.6	4.1.4	4.1.4	4.1.10	4.2.5.2 7.3.2	4.2.5.3
(1)	(2)	(3a)	(3b)	(4)	(5)	(6)	(7)	(8)	(9a)	(9b)	(10)	(11)
1816	PROPYLTRICHLORO-SILANE	8	CF1	II	8 +3		LQ22	P001 IBC02		MP15	T7	TP2
1817	PYROSULPHURYL CHLORIDE	8	C1	II	8		LQ22	P001 IBC02		MP15	T8	TP2 TP12
1818	SILICON TETRACHLORIDE	8	C1	II	8		LQ22	P001 IBC02		MP15	T7	TP2 TP7
1819	SODIUM ALUMINATE SOLUTION	8	C5	II	8		LQ22	P001 IBC02		MP15	T7	TP2
1819	SODIUM ALUMINATE SOLUTION	8	C5	III	8		LQ19	P001 IBC03 LP01 R001		MP15	T4	TP1
1823	SODIUM HYDROXIDE, SOLID	8	C6	II	8		LQ23	P002 IBC08	B4	MP10	T3	TP33
1824	SODIUM HYDROXIDE SOLUTION	8	C5	II	8		LQ22	P001 IBC02		MP15	T7	TP2
1824	SODIUM HYDROXIDE SOLUTION	8	C5	III	8		LQ19	P001 IBC03 LP01 R001		MP15	T4	TP1
1825	SODIUM MONOXIDE	8	C6	II	8		LQ23	P002 IBC08	B4	MP10	T3	TP33
1826	NITRATING ACID MIXTURE, SPENT, with more than 50% nitric acid	8	CO1	I	8 +5.1	113	LQ0	P001		MP8 MP17	T10	TP2 TP12
1826	NITRATING ACID MIXTURE, SPENT, with not more than 50% nitric acid	8	C1	II	8	113	LQ22	P001 IBC02		MP15	T8	TP2 TP12
1827	STANNIC CHLORIDE, ANHYDROUS	8	C1	II	8		LQ22	P001 IBC02		MP15	T7	TP2
1828	SULPHUR CHLORIDES	8	C1	I	8		LQ0	P602		MP8 MP17	T20	TP2 TP12
1829	SULPHUR TRIOXIDE, STABILIZED	8	C1	I	8	623	LQ0	P001		MP8 MP17	T20	TP4 TP12 TP25 TP26
1830	SULPHURIC ACID with more than 51% acid	8	C1	II	8		LQ22	P001 IBC02		MP15	T8	TP2 TP12
1831	SULPHURIC ACID, FUMING	8	CT1	I	8 +6.1		LQ0	P602		MP8 MP17	T20	TP2 TP12
1832	SULPHURIC ACID, SPENT	8	C1	II	8	113	LQ22	P001 IBC02		MP15	T8	TP2 TP12
1833	SULPHUROUS ACID	8	C1	II	8		LQ22	P001 IBC02		MP15	T7	TP2
1834	SULPHURYL CHLORIDE	8	C1	I	8		LQ0	P602		MP8 MP17	T20	TP2 TP12
1835	TETRAMETHYL-AMMONIUM HYDROXIDE SOLUTION	8	C7	II	8		LQ22	P001 IBC02		MP15	T7	TP2
1835	TETRAMETHYL-AMMONIUM HYDROXIDE SOLUTION	8	C7	III	8		LQ19	P001 IBC03 LP01 R001		MP15	T7	TP2
1836	THIONYL CHLORIDE	8	C1	I	8		LQ0	P802		MP8 MP17	T10	TP2 TP12
1837	THIOPHOSPHORYL CHLORIDE	8	C1	II	8		LQ22	P001 IBC02		MP15	T7	TP2
1838	TITANIUM TETRACHLORIDE	8	C1	II	8		LQ22	P001 IBC02		MP15	T10	TP2
1839	TRICHLOROACETIC ACID	8	C4	II	8		LQ23	P002 IBC08	B4	MP10	T3	TP33
1840	ZINC CHLORIDE SOLUTION	8	C1	III	8		LQ19	P001 IBC03 LP01 R001		MP15	T4	TP1

ADR tank		Vehicle for tank carriage	Transport category	Special provisions for carriage				Hazard identifi-cation No.	UN No.	Name and description
Tank code	Special provisions			Packages	Bulk	Loading, unloading and handling	Operation			
4.3	4.3.5, 6.8.4	9.1.1.2	1.1.3.6	7.2.4	7.3.3	7.5.11	8.5	5.3.2.3		3.1.2
(12)	(13)	(14)	(15)	(16)	(17)	(18)	(19)	(20)	(1)	(2)
L4BN		FL	2				S2	X83	1816	PROPYLTRICHLORO-SILANE
L4BN		AT	2					X80	1817	PYROSULPHURYL CHLORIDE
L4BN		AT	2					X80	1818	SILICON TETRACHLORIDE
L4BN		AT	2					80	1819	SODIUM ALUMINATE SOLUTION
L4BN		AT	3					80	1819	SODIUM ALUMINATE SOLUTION
SGAN		AT	2	V11				80	1823	SODIUM HYDROXIDE, SOLID
L4BN		AT	2					80	1824	SODIUM HYDROXIDE SOLUTION
L4BN		AT	3					80	1824	SODIUM HYDROXIDE SOLUTION
SGAN		AT	2	V11				80	1825	SODIUM MONOXIDE
L10BH		AT	1			CV24	S20	885	1826	NITRATING ACID MIXTURE, SPENT, with more than 50% nitric acid
L4BN		AT	2					80	1826	NITRATING ACID MIXTURE, SPENT, with not more than 50% nitric acid
L4BN		AT	2					X80	1827	STANNIC CHLORIDE, ANHYDROUS
L10BH		AT	1				S20	X88	1828	SULPHUR CHLORIDES
L10BH	TU32 TE13 TT5 TM3	AT	1				S20	X88	1829	SULPHUR TRIOXIDE, STABILIZED
L4BN		AT	2					80	1830	SULPHURIC ACID with more than 51% acid
L10BH		AT	1			CV13 CV28	S20	X886	1831	SULPHURIC ACID, FUMING
L4BN		AT	2					80	1832	SULPHURIC ACID, SPENT
L4BN		AT	2					80	1833	SULPHUROUS ACID
L10BH		AT	1				S20	X88	1834	SULPHURYL CHLORIDE
L4BN		AT	2					80	1835	TETRAMETHYL-AMMONIUM HYDROXIDE SOLUTION
L4BN		AT	3					80	1835	TETRAMETHYL-AMMONIUM HYDROXIDE SOLUTION
L10BH		AT	1				S20	X88	1836	THIONYL CHLORIDE
L4BN		AT	2					X80	1837	THIOPHOSPHORYL CHLORIDE
L4BN		AT	2					X80	1838	TITANIUM TETRACHLORIDE
SGAN L4BN		AT	2	V11				80	1839	TRICHLOROACETIC ACID
L4BN		AT	3					80	1840	ZINC CHLORIDE SOLUTION

UN No.	Name and description	Class	Classification code	Packing group	Labels	Special provisions	Limited quantities	Packaging			Portable tanks and bulk containers	
								Packing instructions	Special packing provisions	Mixed packing provisions	Instructions	Special provisions
	3.1.2	2.2	2.2	2.1.1.3	5.2.2	3.3	3.4.6	4.1.4	4.1.4	4.1.10	4.2.5.2 7.3.2	4.2.5.3
(1)	(2)	(3a)	(3b)	(4)	(5)	(6)	(7)	(8)	(9a)	(9b)	(10)	(11)
1841	ACETALDEHYDE AMMONIA	9	M11	III	9		LQ27	P002 IBC08 LP01 R001	B3 B6	MP10	T1	TP33
1843	AMMONIUM DINITRO-o-CRESOLATE, SOLID	6.1	T2	II	6.1		LQ18	P002 IBC08	B4	MP10	T3	TP33
1845	Carbon dioxide, solid (Dry ice)	9	M11	NOT SUBJECT TO ADR								
1846	CARBON TETRACHLORIDE	6.1	T1	II	6.1		LQ17	P001 IBC02		MP15	T7	TP2
1847	POTASSIUM SULPHIDE, HYDRATED with not less than 30% water of crystallization	8	C6	II	8	523	LQ23	P002 IBC08	B4	MP10	T3	TP33
1848	PROPIONIC ACID	8	C3	III	8		LQ19	P001 IBC03 LP01 R001		MP15	T4	TP1
1849	SODIUM SULPHIDE, HYDRATED with not less than 30% water	8	C6	II	8	523	LQ23	P002 IBC08	B4	MP10	T3	TP33
1851	MEDICINE, LIQUID, TOXIC, N.O.S.	6.1	T1	II	6.1	221 274 601	LQ17	P001	PP6	MP15		
1851	MEDICINE, LIQUID, TOXIC, N.O.S.	6.1	T1	III	6.1	221 274 601	LQ19	P001 LP01 R001	PP6	MP15		
1854	BARIUM ALLOYS, PYROPHORIC	4.2	S4	I	4.2		LQ0	P404		MP13	T21	TP7 TP33
1855	CALCIUM, PYROPHORIC or CALCIUM ALLOYS, PYROPHORIC	4.2	S4	I	4.2		LQ0	P404		MP13		
1856	Rags, oily	4.2	S2	NOT SUBJECT TO ADR								
1857	Textile waste, wet	4.2	S2	NOT SUBJECT TO ADR								
1858	HEXAFLUOROPROPYLENE (REFRIGERANT GAS R 1216)	2	2A		2.2		LQ1	P200		MP9	(M) T50	
1859	SILICON TETRAFLUORIDE	2	2TC		2.3 +8		LQ0	P200		MP9	(M)	
1860	VINYL FLUORIDE, STABILIZED	2	2F		2.1		LQ0	P200		MP9	(M)	
1862	ETHYL CROTONATE	3	F1	II	3		LQ4	P001 IBC02 R001		MP19	T4	TP2
1863	FUEL, AVIATION, TURBINE ENGINE (vapour pressure at 50 °C more than 175 kPa)	3	F1	I	3	640A	LQ3	P001		MP7 MP17	T11	TP1 TP8 TP28
1863	FUEL, AVIATION, TURBINE ENGINE (vapour pressure at 50 °C more than 110 kPa but not more than 175 kPa)	3	F1	I	3	640B	LQ3	P001		MP7 MP17	T11	TP1 TP8 TP28
1863	FUEL, AVIATION, TURBINE ENGINE (vapour pressure at 50 °C more than 110 kPa but not more than 175 kPa)	3	F1	II	3	640C	LQ4	P001		MP19	T4	TP1 TP8
1863	FUEL, AVIATION, TURBINE ENGINE (vapour pressure at 50 °C not more than 110 kPa)	3	F1	II	3	640D	LQ4	P001 IBC02 R001		MP19	T4	TP1 TP8

ADR tank		Vehicle for tank carriage	Transport category	Special provisions for carriage				Hazard identifi-cation No.	UN No.	Name and description
Tank code	Special provisions			Packages	Bulk	Loading, unloading and handling	Operation			
4.3	4.3.5, 6.8.4	9.1.1.2	1.1.3.6	7.2.4	7.3.3	7.5.11	8.5	5.3.2.3		3.1.2
(12)	(13)	(14)	(15)	(16)	(17)	(18)	(19)	(20)	(1)	(2)
SGAV		AT	3		VV3			90	1841	ACETALDEHYDE AMMONIA
SGAH	TU15 TE15 TE19	AT	2	V11		CV13 CV28	S9 S19	60	1843	AMMONIUM DINITRO-o-CRESOLATE, SOLID
NOT SUBJECT TO ADR									1845	Carbon dioxide, solid (Dry ice)
L4BH	TU15 TE15 TE19	AT	2			CV13 CV28	S9 S19	60	1846	CARBON TETRACHLORIDE
L4BN SGAN		AT	2	V11				80	1847	POTASSIUM SULPHIDE, HYDRATED with not less than 30% water of crystallization
L4BN		AT	3					80	1848	PROPIONIC ACID
L4BN SGAN		AT	2	V11				80	1849	SODIUM SULPHIDE, HYDRATED with not less than 30% water
L4BH	TU15 TE15 TE19	AT	2			CV13 CV28	S9 S19	60	1851	MEDICINE, LIQUID, TOXIC, N.O.S.
L4BH	TU15 TE15 TE19	AT	2			CV13 CV28	S9	60	1851	MEDICINE, LIQUID, TOXIC, N.O.S.
		AT	0	V1			S20	43	1854	BARIUM ALLOYS, PYROPHORIC
			0	V1			S20		1855	CALCIUM, PYROPHORIC or CALCIUM ALLOYS, PYROPHORIC
NOT SUBJECT TO ADR									1856	Rags, oily
NOT SUBJECT TO ADR									1857	Textile waste, wet
PxBN(M)		AT	3			CV9 CV10 CV36		20	1858	HEXAFLUOROPROPYLENE (REFRIGERANT GAS R 1216)
PxBH(M)		AT	1			CV9 CV10 CV36	S7 S17	268	1859	SILICON TETRAFLUORIDE
PxBN(M)		FL	2			CV9 CV10 CV36	S2 S20	239	1860	VINYL FLUORIDE, STABILIZED
LGBF		FL	2				S2 S20	33	1862	ETHYL CROTONATE
L4BN		FL	1				S2 S20	33	1863	FUEL, AVIATION, TURBINE ENGINE (vapour pressure at 50 °C more than 175 kPa)
L1.5BN		FL	1				S2 S20	33	1863	FUEL, AVIATION, TURBINE ENGINE (vapour pressure at 50 °C more than 110 kPa but not more than 175 kPa)
L1.5BN		FL	2				S2 S20	33	1863	FUEL, AVIATION, TURBINE ENGINE (vapour pressure at 50 °C more than 110 kPa but not more than 175 kPa)
LGBF		FL	2				S2 S20	33	1863	FUEL, AVIATION, TURBINE ENGINE (vapour pressure at 50 °C not more than 110 kPa)

UN No.	Name and description	Class	Classification code	Packing group	Labels	Special provisions	Limited quantities	Packaging			Portable tanks and bulk containers	
								Packing instructions	Special packing provisions	Mixed packing provisions	Instructions	Special provisions
	3.1.2	2.2	2.2	2.1.1.3	5.2.2	3.3	3.4.6	4.1.4	4.1.4	4.1.10	4.2.5.2 7.3.2	4.2.5.3
(1)	(2)	(3a)	(3b)	(4)	(5)	(6)	(7)	(8)	(9a)	(9b)	(10)	(11)
1863	FUEL, AVIATION, TURBINE ENGINE	3	F1	III	3		LQ7	P001 IBC03 LP01 R001		MP19	T2	TP1
1865	n-PROPYL NITRATE	3	F1	II	3		LQ4	P001 IBC02 R001	B7	MP19		
1866	RESIN SOLUTION, flammable (vapour pressure at 50 °C more than 175 kPa)	3	F1	I	3	640A	LQ3	P001		MP7 MP17	T11	TP1 TP8 TP28
1866	RESIN SOLUTION, flammable (vapour pressure at 50 °C more than 110 kPa but not more than 175 kPa)	3	F1	I	3	640B	LQ3	P001		MP7 MP17	T11	TP1 TP8 TP28
1866	RESIN SOLUTION, flammable (vapour pressure at 50 °C more than 110 kPa but not more than 175 kPa)	3	F1	II	3	640C	LQ6	P001	PP1	MP19	T4	TP1 TP8
1866	RESIN SOLUTION, flammable (vapour pressure at 50 °C not more than 110 kPa)	3	F1	II	3	640D	LQ6	P001 IBC02 R001	PP1	MP19	T4	TP1 TP8
1866	RESIN SOLUTION, flammable	3	F1	III	3	640E	LQ7	P001 IBC03 LP01 R001	PP1	MP19	T2	TP1
1866	RESIN SOLUTION, flammable (having a flash-point below 23 °C and viscous according to 2.2.3.1.4) (vapour pressure at 50 °C more than 175 kPa)	3	F1	III	3	640F	LQ7	P001 LP01 R001	PP1	MP19	T2	TP1
1866	RESIN SOLUTION, flammable (having a flash-point below 23 °C and viscous according to 2.2.3.1.4) (vapour pressure at 50 °C more than 110 kPa but not more than 175 kPa)	3	F1	III	3	640G	LQ7	P001 LP01 R001	PP1	MP19	T2	TP1
1866	RESIN SOLUTION, flammable (having a flash-point below 23 °C and viscous according to 2.2.3.1.4) (vapour pressure at 50 °C not more than 110 kPa)	3	F1	III	3	640H	LQ7	P001 IBC02 LP01 R001	PP1	MP19	T2	TP1
1868	DECABORANE	4.1	FT2	II	4.1 +6.1		LQ0	P002 IBC06		MP10	T3	TP33
1869	MAGNESIUM or MAGNESIUM ALLOYS with more than 50% magnesium in pellets, turnings or ribbons	4.1	F3	III	4.1	59	LQ9	P002 IBC08 LP02 R001	B3	MP11	T1	TP33
1870	POTASSIUM BOROHYDRIDE	4.3	W2	I	4.3		LQ0	P403		MP2		
1871	TITANIUM HYDRIDE	4.1	F3	II	4.1		LQ8	P410 IBC04	PP40	MP11	T3	TP33
1872	LEAD DIOXIDE	5.1	OT2	III	5.1 +6.1		LQ12	P002 IBC08 LP02 R001	B3	MP2	T1	TP33

ADR tank		Vehicle for tank carriage	Transport category	Special provisions for carriage				Hazard identifi-cation No.	UN No.	Name and description
Tank code	Special provisions			Packages	Bulk	Loading, unloading and handling	Operation			
4.3	4.3.5, 6.8.4	9.1.1.2	1.1.3.6	7.2.4	7.3.3	7.5.11	8.5	5.3.2.3		3.1.2
(12)	(13)	(14)	(15)	(16)	(17)	(18)	(19)	(20)	(1)	(2)
LGBF		FL	3				S2	30	1863	FUEL, AVIATION, TURBINE ENGINE
			2				S2 S20		1865	n-PROPYL NITRATE
L4BN		FL	1				S2 S20	33	1866	RESIN SOLUTION, flammable (vapour pressure at 50 °C more than 175 kPa)
L1.5BN		FL	1				S2 S20	33	1866	RESIN SOLUTION, flammable (vapour pressure at 50 °C more than 110 kPa but not more than 175 kPa)
L1.5BN		FL	2				S2 S20	33	1866	RESIN SOLUTION, flammable (vapour pressure at 50 °C more than 110 kPa but not more than 175 kPa)
LGBF		FL	2				S2 S20	33	1866	RESIN SOLUTION, flammable (vapour pressure at 50 °C not more than 110 kPa)
LGBF		FL	3				S2	30	1866	RESIN SOLUTION, flammable
L4BN		FL	3				S2	33	1866	RESIN SOLUTION, flammable (having a flash-point below 23 °C and viscous according to 2.2.3.1.4) (vapour pressure at 50 °C more than 175 kPa)
L1.5BN		FL	3				S2	33	1866	RESIN SOLUTION, flammable (having a flash-point below 23 °C and viscous according to 2.2.3.1.4) (vapour pressure at 50 °C more than 110 kPa but not more than 175 kPa)
LGBF		FL	3				S2	33	1866	RESIN SOLUTION, flammable (having a flash-point below 23 °C and viscous according to 2.2.3.1.4) (vapour pressure at 50 °C not more than 110 kPa)
SGAN		AT	2	V11 V12		CV28		46	1868	DECABORANE
SGAV		AT	3		VV1			40	1869	MAGNESIUM or MAGNESIUM ALLOYS with more than 50% magnesium in pellets, turnings or ribbons
			1	V1		CV23	S20		1870	POTASSIUM BOROHYDRIDE
SGAN		AT	2					40	1871	TITANIUM HYDRIDE
SGAN	TU3	AT	3			CV24 CV28		56	1872	LEAD DIOXIDE

UN No.	Name and description	Class	Classification code	Packing group	Labels	Special provisions	Limited quantities	Packaging			Portable tanks and bulk containers	
								Packing instructions	Special packing provisions	Mixed packing provisions	Instructions	Special provisions
	3.1.2	2.2	2.2	2.1.1.3	5.2.2	3.3	3.4.6	4.1.4	4.1.4	4.1.10	4.2.5.2 7.3.2	4.2.5.3
(1)	(2)	(3a)	(3b)	(4)	(5)	(6)	(7)	(8)	(9a)	(9b)	(10)	(11)
1873	PERCHLORIC ACID with more than 50% but not more than 72% acid, by mass	5.1	OC1	I	5.1 +8	60	LQ0	P502	PP28	MP3	T10	TP1 TP12
1884	BARIUM OXIDE	6.1	T5	III	6.1		LQ9	P002 IBC08 LP02 R001	B3	MP10	T1	TP33
1885	BENZIDINE	6.1	T2	II	6.1		LQ18	P002 IBC08	B4	MP10	T3	TP33
1886	BENZYLIDENE CHLORIDE	6.1	T1	II	6.1		LQ17	P001 IBC02		MP15	T7	TP2
1887	BROMOCHLOROMETHANE	6.1	T1	III	6.1		LQ19	P001 IBC03 LP01 R001		MP15	T4	TP1
1888	CHLOROFORM	6.1	T1	III	6.1		LQ19	P001 IBC03 LP01 R001		MP15	T7	TP2
1889	CYANOGEN BROMIDE	6.1	TC2	I	6.1 +8		LQ0	P002		MP18	T6	TP33
1891	ETHYL BROMIDE	6.1	T1	II	6.1		LQ17	P001 IBC02	B8	MP15	T7	TP2
1892	ETHYLDICHLOROARSINE	6.1	T3	I	6.1		LQ0	P602		MP8 MP17	T14	TP2
1894	PHENYLMERCURIC HYDROXIDE	6.1	T3	II	6.1		LQ18	P002 IBC08	B4	MP10	T3	TP33
1895	PHENYLMERCURIC NITRATE	6.1	T3	II	6.1		LQ18	P002 IBC08	B4	MP10	T3	TP33
1897	TETRACHLOROETHYLENE	6.1	T1	III	6.1		LQ19	P001 IBC03 LP01 R001		MP15	T4	TP1
1898	ACETYL IODIDE	8	C3	II	8		LQ22	P001 IBC02		MP15	T7	TP2
1902	DIISOOCTYL ACID PHOSPHATE	8	C3	III	8		LQ19	P001 IBC03 LP01 R001		MP15	T4	TP1
1903	DISINFECTANT, LIQUID, CORROSIVE, N.O.S.	8	C9	I	8	274	LQ0	P001		MP8 MP17		
1903	DISINFECTANT, LIQUID, CORROSIVE, N.O.S.	8	C9	II	8	274	LQ22	P001 IBC02		MP15		
1903	DISINFECTANT, LIQUID, CORROSIVE, N.O.S.	8	C9	III	8	274	LQ19	P001 IBC03 LP01 R001		MP15		
1905	SELENIC ACID	8	C2	I	8		LQ0	P002 IBC07		MP18	T6	TP33
1906	SLUDGE ACID	8	C1	II	8		LQ22	P001 IBC02		MP15	T8	TP2 TP12 TP28
1907	SODA LIME with more than 4% sodium hydroxide	8	C6	III	8	62	LQ24	P002 IBC08 LP02 R001	B3	MP10	T1	TP33
1908	CHLORITE SOLUTION	8	C9	II	8	521	LQ22	P001 IBC02		MP15	T7	TP2 TP24
1908	CHLORITE SOLUTION	8	C9	III	8	521	LQ19	P001 IBC03 LP01 R001		MP15	T4	TP2 TP24
1910	Calcium oxide	8	C6	NOT SUBJECT TO ADR								

ADR tank		Vehicle for tank carriage	Transport category	Special provisions for carriage				Hazard identifi-cation No.	UN No.	Name and description
Tank code	Special provisions			Packages	Bulk	Loading, unloading and handling	Operation			
4.3	4.3.5, 6.8.4	9.1.1.2	1.1.3.6	7.2.4	7.3.3	7.5.11	8.5	5.3.2.3		3.1.2
(12)	(13)	(14)	(15)	(16)	(17)	(18)	(19)	(20)	(1)	(2)
L4DN(+)	TU3 TU28	AT	1			CV24	S20	558	1873	PERCHLORIC ACID with more than 50% but not more than 72% acid, by mass
SGAH L4BH	TU15 TE15 TE19	AT	2		VV9a	CV13 CV28	S9	60	1884	BARIUM OXIDE
SGAH L4BH	TU15 TE15 TE19	AT	2	V11		CV13 CV28	S9 S19	60	1885	BENZIDINE
L4BH	TU15 TE15 TE19	AT	2			CV13 CV28	S9 S19	60	1886	BENZYLIDENE CHLORIDE
L4BH	TU15 TE15 TE19	AT	2			CV13 CV28	S9	60	1887	BROMOCHLOROMETHANE
L4BH	TU15 TE15 TE19	AT	2			CV13 CV28	S9	60	1888	CHLOROFORM
S10AH L10CH	TU14 TU15 TE19 TE21	AT	1			CV1 CV13 CV28	S9 S17	668	1889	CYANOGEN BROMIDE
L4BH	TU15 TE15 TE19	AT	2			CV13 CV28	S9 S19	60	1891	ETHYL BROMIDE
L10CH	TU14 TU15 TE19 TE21	AT	1			CV1 CV13 CV28	S9 S17	66	1892	ETHYLDICHLOROARSINE
SGAH	TU15 TE15 TE19	AT	2	V11		CV13 CV28	S9 S19	60	1894	PHENYLMERCURIC HYDROXIDE
SGAH	TU15 TE15 TE19	AT	2	V11		CV13 CV28	S9 S19	60	1895	PHENYLMERCURIC NITRATE
L4BH	TU15 TE15 TE19	AT	2			CV13 CV28	S9	60	1897	TETRACHLOROETHYLENE
L4BN		AT	2					80	1898	ACETYL IODIDE
L4BN		AT	3					80	1902	DIISOOCTYL ACID PHOSPHATE
L10BH		AT	1				S20	88	1903	DISINFECTANT, LIQUID, CORROSIVE, N.O.S.
L4BN		AT	2					80	1903	DISINFECTANT, LIQUID, CORROSIVE, N.O.S.
L4BN		AT	3					80	1903	DISINFECTANT, LIQUID, CORROSIVE, N.O.S.
S10AN		AT	1	V10 V12			S20	88	1905	SELENIC ACID
L4BN		AT	2					80	1906	SLUDGE ACID
SGAV		AT	3		VV9b			80	1907	SODA LIME with more than 4% sodium hydroxide
L4BV(+)	TE11	AT	2					80	1908	CHLORITE SOLUTION
L4BV(+)	TE11	AT	3					80	1908	CHLORITE SOLUTION
NOT SUBJECT TO ADR									1910	Calcium oxide

UN No.	Name and description	Class	Classification code	Packing group	Labels	Special provisions	Limited quantities	Packaging			Portable tanks and bulk containers	
								Packing instructions	Special packing provisions	Mixed packing provisions	Instructions	Special provisions
	3.1.2	2.2	2.2	2.1.1.3	5.2.2	3.3	3.4.6	4.1.4	4.1.4	4.1.10	4.2.5.2 7.3.2	4.2.5.3
(1)	(2)	(3a)	(3b)	(4)	(5)	(6)	(7)	(8)	(9a)	(9b)	(10)	(11)
1911	DIBORANE	2	2TF		2.3 +2.1		LQ0	P200		MP9		
1912	METHYL CHLORIDE AND METHYLENE CHLORIDE MIXTURE	2	2F		2.1	228	LQ0	P200		MP9	(M) T50	
1913	NEON, REFRIGERATED LIQUID	2	3A		2.2	593	LQ1	P203		MP9	T75	TP5
1914	BUTYL PROPIONATES	3	F1	III	3		LQ7	P001 IBC03 LP01 R001		MP19	T2	TP1
1915	CYCLOHEXANONE	3	F1	III	3		LQ7	P001 IBC03 LP01 R001		MP19	T2	TP1
1916	2,2'-DICHLORODIETHYL ETHER	6.1	TF1	II	6.1 +3		LQ17	P001 IBC02		MP15	T7	TP2
1917	ETHYL ACRYLATE, STABILIZED	3	F1	II	3		LQ4	P001 IBC02 R001		MP19	T4	TP1
1918	ISOPROPYLBENZENE	3	F1	III	3		LQ7	P001 IBC03 LP01 R001		MP19	T2	TP1
1919	METHYL ACRYLATE, STABILIZED	3	F1	II	3		LQ4	P001 IBC02 R001		MP19	T4	TP1
1920	NONANES	3	F1	III	3		LQ7	P001 IBC03 LP01 R001		MP19	T2	TP1
1921	PROPYLENEIMINE, STABILIZED	3	FT1	I	3 +6.1		LQ0	P001		MP2	T14	TP2
1922	PYRROLIDINE	3	FC	II	3 +8		LQ4	P001 IBC02		MP19	T7	TP1
1923	CALCIUM DITHIONITE (CALCIUM HYDROSULPHITE)	4.2	S4	II	4.2		LQ0	P410 IBC06		MP14	T3	TP33
1928	METHYL MAGNESIUM BROMIDE IN ETHYL ETHER	4.3	WF1	I	4.3 +3		LQ0	P402 PR1		MP2		
1929	POTASSIUM DITHIONITE (POTASSIUM HYDROSULPHITE)	4.2	S4	II	4.2		LQ0	P410 IBC06		MP14	T3	TP33
1931	ZINC DITHIONITE (ZINC HYDROSULPHITE)	9	M11	III	9		LQ27	P002 IBC08 LP02 R001	B3	MP10	T1	TP33
1932	ZIRCONIUM SCRAP	4.2	S4	III	4.2	524 592	LQ0	P002 IBC08 LP02 R001	B3	MP14	T1	TP33
1935	CYANIDE SOLUTION, N.O.S.	6.1	T4	I	6.1	274 525	LQ0	P001		MP8 MP17	T14	TP2 TP9 TP27
1935	CYANIDE SOLUTION, N.O.S.	6.1	T4	II	6.1	274 525	LQ17	P001 IBC02		MP15	T11	TP2 TP27
1935	CYANIDE SOLUTION, N.O.S.	6.1	T4	III	6.1	274 525	LQ19	P001 IBC03 LP01 R001		MP15	T7	TP2 TP28
1938	BROMOACETIC ACID SOLUTION	8	C3	II	8		LQ22	P001 IBC02		MP15	T7	TP2

ADR tank		Vehicle for tank carriage	Transport category	Special provisions for carriage				Hazard identifi-cation No.	UN No.	Name and description
Tank code	Special provisions			Packages	Bulk	Loading, unloading and handling	Operation			
4.3	4.3.5, 6.8.4	9.1.1.2	1.1.3.6	7.2.4	7.3.3	7.5.11	8.5	5.3.2.3		3.1.2
(12)	(13)	(14)	(15)	(16)	(17)	(18)	(19)	(20)	(1)	(2)
			1			CV9 CV10 CV36	S2 S7 S17		1911	DIBORANE
PxBN(M)		FL	2			CV9 CV10 CV36	S2 S20	23	1912	METHYL CHLORIDE AND METHYLENE CHLORIDE MIXTURE
RxBN	TU19	AT	3	V5		CV9 CV11 CV36	S20	22	1913	NEON, REFRIGERATED LIQUID
LGBF		FL	3				S2	30	1914	BUTYL PROPIONATES
LGBF		FL	3				S2	30	1915	CYCLOHEXANONE
L4BH	TU15 TE15 TE19	FL	2			CV13 CV28	S2 S9 S19	63	1916	2,2'-DICHLORODIETHYL ETHER
LGBF		FL	2				S2 S20	339	1917	ETHYL ACRYLATE, STABILIZED
LGBF		FL	3				S2	30	1918	ISOPROPYLBENZENE
LGBF		FL	2				S2 S20	339	1919	METHYL ACRYLATE, STABILIZED
LGBF		FL	3				S2	30	1920	NONANES
L15CH	TU14 TU15 TE21	FL	1			CV13 CV28	S2 S19	336	1921	PROPYLENEIMINE, STABILIZED
L4BH	TE15	FL	2				S2 S20	338	1922	PYRROLIDINE
SGAN		AT	2	V1 V12				40	1923	CALCIUM DITHIONITE (CALCIUM HYDROSULPHITE)
L10DH	TU4 TU14 TU22 TE21 TM2	FL	0	V1		CV23	S2 S20	X323	1928	METHYL MAGNESIUM BROMIDE IN ETHYL ETHER
SGAN		AT	2	V1 V12				40	1929	POTASSIUM DITHIONITE (POTASSIUM HYDROSULPHITE)
SGAV		AT	3		VV3			90	1931	ZINC DITHIONITE (ZINC HYDROSULPHITE)
SGAN		AT	3	V1	VV4			40	1932	ZIRCONIUM SCRAP
L10CH	TU14 TU15 TE19 TE21	AT	1			CV1 CV13 CV28	S9 S17	66	1935	CYANIDE SOLUTION, N.O.S.
L4BH	TU15 TE15 TE19	AT	2			CV13 CV28	S9 S19	60	1935	CYANIDE SOLUTION, N.O.S.
L4BH	TU15 TE15 TE19	AT	2			CV13 CV28	S9	60	1935	CYANIDE SOLUTION, N.O.S.
L4BN		AT	2					80	1938	BROMOACETIC ACID SOLUTION

UN No.	Name and description	Class	Classification code	Packing group	Labels	Special provisions	Limited quantities	Packaging			Portable tanks and bulk containers	
								Packing instructions	Special packing provisions	Mixed packing provisions	Instructions	Special provisions
	3.1.2	2.2	2.2	2.1.1.3	5.2.2	3.3	3.4.6	4.1.4	4.1.4	4.1.10	4.2.5.2 7.3.2	4.2.5.3
(1)	(2)	(3a)	(3b)	(4)	(5)	(6)	(7)	(8)	(9a)	(9b)	(10)	(11)
1938	BROMOACETIC ACID SOLUTION	8	C3	III	8		LQ19	P001 IBC02 LP01 R001		MP15	T7	TP2
1939	PHOSPHORUS OXYBROMIDE	8	C2	II	8		LQ23	P002 IBC08	B4	MP10	T3	TP33
1940	THIOGLYCOLIC ACID	8	C3	II	8		LQ22	P001 IBC02		MP15	T7	TP2
1941	DIBROMODIFLUORO-METHANE	9	M11	III	9		LQ28	P001 LP01 R001		MP15	T11	TP2
1942	AMMONIUM NITRATE with not more than 0.2% total combustible material, including any organic substance calculated as carbon, to the exclusion of any other added substance	5.1	O2	III	5.1	306 611	LQ12	P002 IBC08 LP02 R001	B3	MP10	T1 BK1 BK2	TP33
1944	MATCHES, SAFETY (book, card or strike on box)	4.1	F1	III	4.1	293	LQ9	P407 R001		MP11		
1945	MATCHES, WAX 'VESTA'	4.1	F1	III	4.1	293	LQ9	P407 R001		MP11		
1950	AEROSOLS, asphyxiant	2	5A		2.2	190 625	LQ2	P204		MP9		
1950	AEROSOLS, corrosive	2	5C		2.2 +8	190 625	LQ2	P204		MP9		
1950	AEROSOLS, corrosive, oxidizing	2	5CO		2.2 +5.1 +8	190 625	LQ2	P204		MP9		
1950	AEROSOLS, flammable	2	5F		2.1	190 625	LQ2	P204		MP9		
1950	AEROSOLS, flammable, corrosive	2	5FC		2.1 +8	190 625	LQ2	P204		MP9		
1950	AEROSOLS, oxidizing	2	5O		2.2 +5.1	190 625	LQ2	P204		MP9		
1950	AEROSOLS, toxic	2	5T		2.2 +6.1	190 625	LQ1	P204		MP9		
1950	AEROSOLS, toxic, corrosive	2	5TC		2.2 +6.1 +8	190 625	LQ1	P204		MP9		
1950	AEROSOLS, toxic, flammable	2	5TF		2.1 +6.1	190 625	LQ1	P204		MP9		
1950	AEROSOLS, toxic, flammable, corrosive	2	5TFC		2.1 +6.1 +8	190 625	LQ1	P204		MP9		
1950	AEROSOLS, toxic, oxidizing	2	5TO		2.2 +5.1 +6.1	190 625	LQ1	P204		MP9		
1950	AEROSOLS, toxic, oxidizing, corrosive	2	5TOC		2.2 +5.1 +6.1 +8	190 625	LQ1	P204		MP9		
1951	ARGON, REFRIGERATED LIQUID	2	3A		2.2	593	LQ1	P203		MP9	T75	TP5
1952	ETHYLENE OXIDE AND CARBON DIOXIDE MIXTURE with not more than 9% ethylene oxide	2	2A		2.2		LQ1	P200		MP9	(M)	
1953	COMPRESSED GAS, TOXIC, FLAMMABLE, N.O.S.	2	1TF		2.3 +2.1	274	LQ0	P200		MP9	(M)	

ADR tank		Vehicle for tank carriage	Transport category	Special provisions for carriage				Hazard identifi-cation No.	UN No.	Name and description
Tank code	Special provisions			Packages	Bulk	Loading, unloading and handling	Operation			
4.3	4.3.5, 6.8.4	9.1.1.2	1.1.3.6	7.2.4	7.3.3	7.5.11	8.5	5.3.2.3		3.1.2
(12)	(13)	(14)	(15)	(16)	(17)	(18)	(19)	(20)	(1)	(2)
L4BN		AT	3					80	1938	BROMOACETIC ACID SOLUTION
SGAN		AT	2	V11				80	1939	PHOSPHORUS OXYBROMIDE
L4BN		AT	2					80	1940	THIOGLYCOLIC ACID
L4BN		AT	3					90	1941	DIBROMODIFLUORO-METHANE
SGAV	TU3	AT	3		VV8	CV24		50	1942	AMMONIUM NITRATE with not more than 0.2% total combustible material, including any organic substance calculated as carbon, to the exclusion of any other added substance
			4						1944	MATCHES, SAFETY (book, card or strike on box)
			4						1945	MATCHES, WAX 'VESTA'
			3			CV9 CV12			1950	AEROSOLS, asphyxiant
			1			CV9 CV12			1950	AEROSOLS, corrosive
			1			CV9 CV12			1950	AEROSOLS, corrosive, oxidizing
			2			CV9 CV12	S2		1950	AEROSOLS, flammable
			1			CV9 CV12	S2		1950	AEROSOLS, flammable, corrosive
			3			CV9 CV12			1950	AEROSOLS, oxidizing
			1			CV9 CV12 CV28	S7		1950	AEROSOLS, toxic
			1			CV9 CV12 CV28	S7		1950	AEROSOLS, toxic, corrosive
			1			CV9 CV12 CV28	S2 S7		1950	AEROSOLS, toxic, flammable
			1			CV9 CV12 CV28	S2 S7		1950	AEROSOLS, toxic, flammable, corrosive
			1			CV9 CV12 CV28	S7		1950	AEROSOLS, toxic, oxidizing
			1			CV9 CV12 CV28	S7		1950	AEROSOLS, toxic, oxidizing, corrosive
RxBN	TU19	AT	3	V5		CV9 CV11 CV36	S20	22	1951	ARGON, REFRIGERATED LIQUID
PxBN(M)		AT	3			CV9 CV10 CV36		20	1952	ETHYLENE OXIDE AND CARBON DIOXIDE MIXTURE with not more than 9% ethylene oxide
CxBH(M)	TU6	FL	1			CV9 CV10 CV36	S2 S7 S17	263	1953	COMPRESSED GAS, TOXIC, FLAMMABLE, N.O.S.

UN No.	Name and description	Class	Classification code	Packing group	Labels	Special provisions	Limited quantities	Packaging			Portable tanks and bulk containers	
								Packing instructions	Special packing provisions	Mixed packing provisions	Instructions	Special provisions
	3.1.2	2.2	2.2	2.1.1.3	5.2.2	3.3	3.4.6	4.1.4	4.1.4	4.1.10	4.2.5.2 7.3.2	4.2.5.3
(1)	(2)	(3a)	(3b)	(4)	(5)	(6)	(7)	(8)	(9a)	(9b)	(10)	(11)
1954	COMPRESSED GAS, FLAMMABLE, N.O.S.	2	1F		2.1	274	LQ0	P200		MP9	(M)	
1955	COMPRESSED GAS, TOXIC, N.O.S.	2	1T		2.3	274	LQ0	P200		MP9	(M)	
1956	COMPRESSED GAS, N.O.S.	2	1A		2.2	274 567	LQ1	P200		MP9	(M)	
1957	DEUTERIUM, COMPRESSED	2	1F		2.1		LQ0	P200		MP9	(M)	
1958	1,2-DICHLORO-1,1,2,2-TETRAFLUOROETHANE (REFRIGERANT GAS R 114)	2	2A		2.2		LQ1	P200		MP9	(M) T50	
1959	1,1-DIFLUOROETHYLENE (REFRIGERANT GAS R 1132a)	2	2F		2.1		LQ0	P200		MP9	(M)	
1961	ETHANE, REFRIGERATED LIQUID	2	3F		2.1		LQ0	P203		MP9	T75	TP5
1962	ETHYLENE	2	2F		2.1		LQ0	P200		MP9	(M)	
1963	HELIUM, REFRIGERATED LIQUID	2	3A		2.2	593	LQ1	P203		MP9	T75	TP5 TP34
1964	HYDROCARBON GAS MIXTURE, COMPRESSED, N.O.S.	2	1F		2.1	274	LQ0	P200		MP9	(M)	
1965	HYDROCARBON GAS MIXTURE, LIQUEFIED, N.O.S. such as mixtures A, A01, A02, A0, A1, B1, B2, B or C	2	2F		2.1	274 583	LQ0	P200		MP9	(M) T50	
1966	HYDROGEN, REFRIGERATED LIQUID	2	3F		2.1		LQ0	P203		MP9	T75	TP5 TP23 TP34
1967	INSECTICIDE GAS, TOXIC, N.O.S.	2	2T		2.3	274	LQ0	P200		MP9	(M)	
1968	INSECTICIDE GAS, N.O.S.	2	2A		2.2	274	LQ1	P200		MP9	(M)	
1969	ISOBUTANE	2	2F		2.1		LQ0	P200		MP9	(M) T50	
1970	KRYPTON, REFRIGERATED LIQUID	2	3A		2.2	593	LQ1	P203		MP9	T75	TP5
1971	METHANE, COMPRESSED or NATURAL GAS, COMPRESSED with high methane content	2	1F		2.1		LQ0	P200		MP9	(M)	
1972	METHANE, REFRIGERATED LIQUID or NATURAL GAS, REFRIGERATED LIQUID with high methane content	2	3F		2.1		LQ0	P203		MP9	T75	TP5

ADR tank		Vehicle for tank carriage	Transport category	Special provisions for carriage				Hazard identifi-cation No.	UN No.	Name and description
Tank code	Special provisions			Packages	Bulk	Loading, unloading and handling	Operation			
4.3	4.3.5, 6.8.4	9.1.1.2	1.1.3.6	7.2.4	7.3.3	7.5.11	8.5	5.3.2.3		3.1.2
(12)	(13)	(14)	(15)	(16)	(17)	(18)	(19)	(20)	(1)	(2)
CxBN(M)		FL	2			CV9 CV10 CV36	S2	23	1954	COMPRESSED GAS, FLAMMABLE, N.O.S.
CxBH(M)	TU6	AT	1			CV9 CV10 CV36	S7 S17	26	1955	COMPRESSED GAS, TOXIC, N.O.S.
CxBN(M)		AT	3			CV9 CV10 CV36		20	1956	COMPRESSED GAS, N.O.S.
CxBN(M)		FL	2			CV9 CV10 CV36	S2	23	1957	DEUTERIUM, COMPRESSED
PxBN(M)		AT	3			CV9 CV10 CV36		20	1958	1,2-DICHLORO-1,1,2,2-TETRAFLUOROETHANE (REFRIGERANT GAS R 114)
PxBN(M)		FL	2			CV9 CV10 CV36	S2 S20	239	1959	1,1-DIFLUOROETHYLENE (REFRIGERANT GAS R 1132a)
RxBN	TU18	FL	2	V5		CV9 CV11 CV36	S2 S17	223	1961	ETHANE, REFRIGERATED LIQUID
PxBN(M)		FL	2			CV9 CV10 CV36	S2	23	1962	ETHYLENE
RxBN	TU19	AT	3	V5		CV9 CV11 CV36	S20	22	1963	HELIUM, REFRIGERATED LIQUID
CxBN(M)		FL	2			CV9 CV10 CV36	S2	23	1964	HYDROCARBON GAS MIXTURE, COMPRESSED, N.O.S.
PxBN(M)		FL	2			CV9 CV10 CV36	S2 S20	23	1965	HYDROCARBON GAS MIXTURE, LIQUEFIED, N.O.S. such as mixtures A, A01, A02, A0, A1, B1, B2, B or C
RxBN	TU18	FL	2	V5		CV9 CV11 CV36	S2 S17	223	1966	HYDROGEN, REFRIGERATED LIQUID
PxBH(M)	TU6	AT	1			CV9 CV10 CV36	S7 S17	26	1967	INSECTICIDE GAS, TOXIC, N.O.S.
PxBN(M)		AT	3			CV9 CV10 CV36		20	1968	INSECTICIDE GAS, N.O.S.
PxBN(M)		FL	2			CV9 CV10 CV36	S2 S20	23	1969	ISOBUTANE
RxBN	TU19	AT	3	V5		CV9 CV11 CV36	S20	22	1970	KRYPTON, REFRIGERATED LIQUID
CxBN(M)		FL	2			CV9 CV10 CV36	S2	23	1971	METHANE, COMPRESSED or NATURAL GAS, COMPRESSED with high methane content
RxBN	TU18	FL	2	V5		CV9 CV11 CV36	S2 S17	223	1972	METHANE, REFRIGERATED LIQUID or NATURAL GAS, REFRIGERATED LIQUID with high methane content

UN No.	Name and description	Class	Classification code	Packing group	Labels	Special provisions	Limited quantities	Packaging			Portable tanks and bulk containers	
								Packing instructions	Special packing provisions	Mixed packing provisions	Instructions	Special provisions
	3.1.2	2.2	2.2	2.1.1.3	5.2.2	3.3	3.4.6	4.1.4	4.1.4	4.1.10	4.2.5.2 7.3.2	4.2.5.3
(1)	(2)	(3a)	(3b)	(4)	(5)	(6)	(7)	(8)	(9a)	(9b)	(10)	(11)
1973	CHLORODIFLUORO-METHANE AND CHLOROPENTAFLUORO-ETHANE MIXTURE with fixed boiling point, with approximately 49% chlorodifluoromethane (REFRIGERANT GAS R 502)	2	2A		2.2		LQ1	P200		MP9	(M) T50	
1974	CHLORODIFLUORO-BROMOMETHANE (REFRIGERANT GAS R 12B1)	2	2A		2.2		LQ1	P200		MP9	(M) T50	
1975	NITRIC OXIDE AND DINITROGEN TETROXIDE MIXTURE (NITRIC OXIDE AND NITROGEN DIOXIDE MIXTURE)	2	2TOC		2.3 +5.1 +8		LQ0	P200		MP9		
1976	OCTAFLUOROCYCLO-BUTANE (REFRIGERANT GAS RC 318)	2	2A		2.2		LQ1	P200		MP9	(M) T50	
1977	NITROGEN, REFRIGERATED LIQUID	2	3A		2.2	593	LQ1	P203		MP9	T75	TP5
1978	PROPANE	2	2F		2.1		LQ0	P200		MP9	(M) T50	
1979	RARE GASES MIXTURE, COMPRESSED	2	1A		2.2		LQ1	P200		MP9	(M)	
1980	RARE GASES AND OXYGEN MIXTURE, COMPRESSED	2	1A		2.2	567	LQ1	P200		MP9	(M)	
1981	RARE GASES AND NITROGEN MIXTURE, COMPRESSED	2	1A		2.2		LQ1	P200		MP9	(M)	
1982	TETRAFLUOROMETHANE (REFRIGERANT GAS R 14)	2	2A		2.2		LQ1	P200		MP9	(M)	
1983	1-CHLORO-2,2,2-TRIFLUOROETHANE (REFRIGERANT GAS R 133a)	2	2A		2.2		LQ1	P200		MP9	(M) T50	
1984	TRIFLUOROMETHANE (REFRIGERANT GAS R 23)	2	2A		2.2		LQ1	P200		MP9	(M)	
1986	ALCOHOLS, FLAMMABLE, TOXIC, N.O.S.	3	FT1	I	3 +6.1	274	LQ0	P001		MP7 MP17	T14	TP2 TP9 TP27
1986	ALCOHOLS, FLAMMABLE, TOXIC, N.O.S.	3	FT1	II	3 +6.1	274	LQ0	P001 IBC02		MP19	T11	TP2 TP27
1986	ALCOHOLS, FLAMMABLE, TOXIC, N.O.S.	3	FT1	III	3 +6.1	274	LQ7	P001 IBC03 R001		MP19	T7	TP1 TP28
1987	ALCOHOLS, N.O.S. (vapour pressure at 50 °C more than 110 kPa but not more than 175 kPa)	3	F1	II	3	274 640C	LQ4	P001		MP19	T7	TP1 TP8 TP28
1987	ALCOHOLS, N.O.S. (vapour pressure at 50 °C not more than 110 kPa)	3	F1	II	3	274 640D	LQ4	P001 IBC02 R001		MP19	T7	TP1 TP8 TP28

ADR tank		Vehicle for tank carriage	Transport category	Special provisions for carriage				Hazard identifi-cation No.	UN No.	Name and description
Tank code	Special provisions			Packages	Bulk	Loading, unloading and handling	Operation			
4.3	4.3.5, 6.8.4	9.1.1.2	1.1.3.6	7.2.4	7.3.3	7.5.11	8.5	5.3.2.3		3.1.2
(12)	(13)	(14)	(15)	(16)	(17)	(18)	(19)	(20)	(1)	(2)
PxBN(M)		AT	3			CV9 CV10 CV36		20	1973	CHLORODIFLUORO-METHANE AND CHLOROPENTAFLUORO-ETHANE MIXTURE with fixed boiling point, with approximately 49% chlorodifluoromethane (REFRIGERANT GAS R 502)
PxBN(M)		AT	3			CV9 CV10 CV36		20	1974	CHLORODIFLUORO-BROMOMETHANE (REFRIGERANT GAS R 12B1)
			1			CV9 CV10 CV36	S7 S17		1975	NITRIC OXIDE AND DINITROGEN TETROXIDE MIXTURE (NITRIC OXIDE AND NITROGEN DIOXIDE MIXTURE)
PxBN(M)		AT	3			CV9 CV10 CV36		20	1976	OCTAFLUOROCYCLO-BUTANE (REFRIGERANT GAS RC 318)
RxBN	TU19	AT	3	V5		CV9 CV11 CV36	S20	22	1977	NITROGEN, REFRIGERATED LIQUID
PxBN(M)		FL	2			CV9 CV10 CV36	S2 S20	23	1978	PROPANE
CxBN(M)		AT	3			CV9 CV10 CV36		20	1979	RARE GASES MIXTURE, COMPRESSED
CxBN(M)		AT	3			CV9 CV10 CV36		20	1980	RARE GASES AND OXYGEN MIXTURE, COMPRESSED
CxBN(M)		AT	3			CV9 CV10 CV36		20	1981	RARE GASES AND NITROGEN MIXTURE, COMPRESSED
PxBN(M)		AT	3			CV9 CV10 CV36		20	1982	TETRAFLUOROMETHANE (REFRIGERANT GAS R 14)
PxBN(M)		AT	3			CV9 CV10 CV36		20	1983	1-CHLORO-2,2,2-TRIFLUOROETHANE (REFRIGERANT GAS R 133a)
PxBN(M)		AT	3			CV9 CV10 CV36		20	1984	TRIFLUOROMETHANE (REFRIGERANT GAS R 23)
L10CH	TU14 TU15 TE21	FL	1			CV13 CV28	S2 S19	336	1986	ALCOHOLS, FLAMMABLE, TOXIC, N.O.S.
L4BH	TU15 TE15	FL	2			CV13 CV28	S2 S19	336	1986	ALCOHOLS, FLAMMABLE, TOXIC, N.O.S.
L4BH	TU15 TE15	FL	3			CV13 CV28	S2	36	1986	ALCOHOLS, FLAMMABLE, TOXIC, N.O.S.
L1.5BN		FL	2				S2 S20	33	1987	ALCOHOLS, N.O.S. (vapour pressure at 50 °C more than 110 kPa but not more than 175 kPa)
LGBF		FL	2				S2 S20	33	1987	ALCOHOLS, N.O.S. (vapour pressure at 50 °C not more than 110 kPa)

UN No.	Name and description	Class	Classification code	Packing group	Labels	Special provisions	Limited quantities	Packaging			Portable tanks and bulk containers	
								Packing instructions	Special packing provisions	Mixed packing provisions	Instructions	Special provisions
	3.1.2	2.2	2.2	2.1.1.3	5.2.2	3.3	3.4.6	4.1.4	4.1.4	4.1.10	4.2.5.2 7.3.2	4.2.5.3
(1)	(2)	(3a)	(3b)	(4)	(5)	(6)	(7)	(8)	(9a)	(9b)	(10)	(11)
1987	ALCOHOLS, N.O.S.	3	F1	III	3	274	LQ7	P001 IBC03 LP01 R001		MP19	T4	TP1 TP29
1988	ALDEHYDES, FLAMMABLE, TOXIC, N.O.S.	3	FT1	I	3 +6.1	274	LQ0	P001		MP7 MP17	T14	TP2 TP9 TP27
1988	ALDEHYDES, FLAMMABLE, TOXIC, N.O.S.	3	FT1	II	3 +6.1	274	LQ0	P001 IBC02		MP19	T11	TP2 TP27
1988	ALDEHYDES, FLAMMABLE, TOXIC, N.O.S.	3	FT1	III	3 +6.1	274	LQ7	P001 IBC03 R001		MP19	T7	TP1 TP28
1989	ALDEHYDES, N.O.S. (vapour pressure at 50 °C more than 175 kPa)	3	F1	I	3	274 640A	LQ3	P001		MP7 MP17	T11	TP1 TP9 TP27
1989	ALDEHYDES, N.O.S. (vapour pressure at 50 °C more than 110 kPa but not more than 175 kPa)	3	F1	I	3	274 640B	LQ3	P001		MP7 MP17	T11	TP1 TP9 TP27
1989	ALDEHYDES, N.O.S. (vapour pressure at 50 °C more than 110 kPa but not more than 175 kPa)	3	F1	II	3	274 640C	LQ4	P001		MP19	T7	TP1 TP8 TP28
1989	ALDEHYDES, N.O.S. (vapour pressure at 50 °C not more than 110 kPa)	3	F1	II	3	274 640D	LQ4	P001 IBC02 R001		MP19	T7	TP1 TP8 TP28
1989	ALDEHYDES, N.O.S.	3	F1	III	3	274	LQ7	P001 IBC03 LP01 R001		MP19	T4	TP1 TP29
1990	BENZALDEHYDE	9	M11	III	9		LQ28	P001 IBC03 LP01 R001		MP15	T2	TP1
1991	CHLOROPRENE, STABILIZED	3	FT1	I	3 +6.1		LQ0	P001		MP7 MP17	T14	TP2 TP6
1992	FLAMMABLE LIQUID, TOXIC, N.O.S.	3	FT1	I	3 +6.1	274	LQ0	P001		MP7 MP17	T14	TP2 TP9 TP27
1992	FLAMMABLE LIQUID, TOXIC, N.O.S.	3	FT1	II	3 +6.1	274	LQ0	P001 IBC02		MP19	T7	TP2
1992	FLAMMABLE LIQUID, TOXIC, N.O.S.	3	FT1	III	3 +6.1	274	LQ7	P001 IBC03 R001		MP19	T7	TP1 TP28
1993	FLAMMABLE LIQUID, N.O.S. (vapour pressure at 50 °C more than 175 kPa)	3	F1	I	3	274 640A	LQ3	P001		MP7 MP17	T11	TP1 TP9 TP27
1993	FLAMMABLE LIQUID, N.O.S. (vapour pressure at 50 °C more than 110 kPa but not more than 175 kPa)	3	F1	I	3	274 640B	LQ3	P001		MP7 MP17	T11	TP1 TP9 TP27
1993	FLAMMABLE LIQUID, N.O.S. (vapour pressure at 50 °C more than 110 kPa but not more than 175 kPa)	3	F1	II	3	274 640C	LQ4	P001		MP19	T7	TP1 TP8 TP28
1993	FLAMMABLE LIQUID, N.O.S. (vapour pressure at 50 °C not more than 110 kPa)	3	F1	II	3	274 640D	LQ4	P001 IBC02 R001		MP19	T7	TP1 TP8 TP28
1993	FLAMMABLE LIQUID, N.O.S.	3	F1	III	3	274 640E	LQ7	P001 IBC03 LP01 R001		MP19	T4	TP1 TP29

ADR tank		Vehicle for tank carriage	Transport category	Special provisions for carriage				Hazard identification No.	UN No.	Name and description
Tank code	Special provisions			Packages	Bulk	Loading, unloading and handling	Operation			
4.3	4.3.5, 6.8.4	9.1.1.2	1.1.3.6	7.2.4	7.3.3	7.5.11	8.5	5.3.2.3		3.1.2
(12)	(13)	(14)	(15)	(16)	(17)	(18)	(19)	(20)	(1)	(2)
LGBF		FL	3				S2	30	1987	ALCOHOLS, N.O.S.
L10CH	TU14 TU15 TE21	FL	1			CV13 CV28	S2 S19	336	1988	ALDEHYDES, FLAMMABLE, TOXIC, N.O.S.
L4BH	TU15 TE15	FL	2			CV13 CV28	S2 S19	336	1988	ALDEHYDES, FLAMMABLE, TOXIC, N.O.S.
L4BH	TU15 TE15	FL	3			CV13 CV28	S2	36	1988	ALDEHYDES, FLAMMABLE, TOXIC, N.O.S.
L4BN		FL	1				S2 S20	33	1989	ALDEHYDES, N.O.S. (vapour pressure at 50 °C more than 175 kPa)
L1.5BN		FL	1				S2 S20	33	1989	ALDEHYDES, N.O.S. (vapour pressure at 50 °C more than 110 kPa but not more than 175 kPa)
L1.5BN		FL	2				S2 S20	33	1989	ALDEHYDES, N.O.S. (vapour pressure at 50 °C more than 110 kPa but not more than 175 kPa)
LGBF		FL	2				S2 S20	33	1989	ALDEHYDES, N.O.S. (vapour pressure at 50 °C not more than 110 kPa)
LGBF		FL	3				S2	30	1989	ALDEHYDES, N.O.S.
LGBV		AT	3					90	1990	BENZALDEHYDE
L10CH	TU14 TU15 TE21	FL	1			CV13 CV28	S2 S19	336	1991	CHLOROPRENE, STABILIZED
L10CH	TU14 TU15 TE21	FL	1			CV13 CV28	S2 S19	336	1992	FLAMMABLE LIQUID, TOXIC, N.O.S.
L4BH	TU15 TE15	FL	2			CV13 CV28	S2 S19	336	1992	FLAMMABLE LIQUID, TOXIC, N.O.S.
L4BH	TU15 TE15	FL	3			CV13 CV28	S2	36	1992	FLAMMABLE LIQUID, TOXIC, N.O.S.
L4BN		FL	1				S2 S20	33	1993	FLAMMABLE LIQUID, N.O.S. (vapour pressure at 50 °C more than 175 kPa)
L1.5BN		FL	1				S2 S20	33	1993	FLAMMABLE LIQUID, N.O.S. (vapour pressure at 50 °C more than 110 kPa but not more than 175 kPa)
L1.5BN		FL	2				S2 S20	33	1993	FLAMMABLE LIQUID, N.O.S. (vapour pressure at 50 °C more than 110 kPa but not more than 175 kPa)
LGBF		FL	2				S2 S20	33	1993	FLAMMABLE LIQUID, N.O.S. (vapour pressure at 50 °C not more than 110 kPa)
LGBF		FL	3				S2	30	1993	FLAMMABLE LIQUID, N.O.S.

UN No.	Name and description	Class	Classification code	Packing group	Labels	Special provisions	Limited quantities	Packaging			Portable tanks and bulk containers	
								Packing instructions	Special packing provisions	Mixed packing provisions	Instructions	Special provisions
	3.1.2	2.2	2.2	2.1.1.3	5.2.2	3.3	3.4.6	4.1.4	4.1.4	4.1.10	4.2.5.2 7.3.2	4.2.5.3
(1)	(2)	(3a)	(3b)	(4)	(5)	(6)	(7)	(8)	(9a)	(9b)	(10)	(11)
1993	FLAMMABLE LIQUID, N.O.S. (having a flash-point below 23 °C and viscous according to 2.2.3.1.4) (vapour pressure at 50 °C more than 175 kPa)	3	F1	III	3	274 640F	LQ7	P001 LP01 R001		MP19	T4	TP1 TP29
1993	FLAMMABLE LIQUID, N.O.S. (having a flash-point below 23 °C and viscous according to 2.2.3.1.4) (vapour pressure at 50 °C more than 110 kPa but not more than 175 kPa)	3	F1	III	3	274 640G	LQ7	P001 LP01 R001		MP19	T4	TP1 TP29
1993	FLAMMABLE LIQUID, N.O.S. (having a flash-point below 23 °C and viscous according to 2.2.3.1.4) (vapour pressure at 50 °C not more than 110 kPa)	3	F1	III	3	274 640H	LQ7	P001 IBC02 LP01 R001		MP19	T4	TP1 TP29
1994	IRON PENTACARBONYL	6.1	TF1	I	6.1 +3		LQ0	P601 PR3		MP2		
1999	TARS, LIQUID, including road asphalt and oils, bitumen and cut backs (vapour pressure at 50 °C more than 110 kPa but not more than 175 kPa)	3	F1	II	3	640C	LQ6	P001		MP19	T3	TP3 TP29
1999	TARS, LIQUID, including road asphalt and oils, bitumen and cut backs (vapour pressure at 50 °C not more than 110 kPa)	3	F1	II	3	640D	LQ6	P001 IBC02 R001		MP19	T3	TP3 TP29
1999	TARS, LIQUID, including road asphalt and oils, bitumen and cut backs	3	F1	III	3	640E	LQ7	P001 IBC03 LP01 R001		MP19	T1	TP3
1999	TARS, LIQUID, including road asphalt and oils, bitumen and cut backs (having a flash-point below 23 °C and viscous according to 2.2.3.1.4) (vapour pressure at 50 °C more than 175 kPa)	3	F1	III	3	640F	LQ7	P001 LP01 R001		MP19	T1	TP3
1999	TARS, LIQUID, including road asphalt and oils, bitumen and cut backs (having a flash-point below 23 °C and viscous according to 2.2.3.1.4) (vapour pressure at 50 °C more than 110 kPa but not more than 175 kPa)	3	F1	III	3	640G	LQ7	P001 LP01 R001		MP19	T1	TP3
1999	TARS, LIQUID, including road asphalt and oils, bitumen and cut backs (having a flash-point below 23 °C and viscous according to 2.2.3.1.4) (vapour pressure at 50 °C not more than 110 kPa)	3	F1	III	3	640H	LQ7	P001 IBC02 LP01 R001		MP19	T1	TP3

ADR tank		Vehicle for tank carriage	Transport category	Special provisions for carriage				Hazard identifi-cation No.	UN No.	Name and description
Tank code	Special provisions			Packages	Bulk	Loading, unloading and handling	Operation			
4.3	4.3.5, 6.8.4	9.1.1.2	1.1.3.6	7.2.4	7.3.3	7.5.11	8.5	5.3.2.3		3.1.2
(12)	(13)	(14)	(15)	(16)	(17)	(18)	(19)	(20)	(1)	(2)
L4BN		FL	3				S2	33	1993	FLAMMABLE LIQUID, N.O.S. (having a flash-point below 23 °C and viscous according to 2.2.3.1.4) (vapour pressure at 50 °C more than 175 kPa)
L1.5BN		FL	3				S2	33	1993	FLAMMABLE LIQUID, N.O.S. (having a flash-point below 23 °C and viscous according to 2.2.3.1.4) (vapour pressure at 50 °C more than 110 kPa but not more than 175 kPa)
LGBF		FL	3				S2	33	1993	FLAMMABLE LIQUID, N.O.S. (having a flash-point below 23 °C and viscous according to 2.2.3.1.4) (vapour pressure at 50 °C not more than 110 kPa)
L15CH	TU14 TU15 TU31 TE19 TE21 TM3	FL	1			CV1 CV13 CV28	S2 S9 S17	663	1994	IRON PENTACARBONYL
L1.5BN		FL	2				S2 S20	33	1999	TARS, LIQUID, including road asphalt and oils, bitumen and cut backs (vapour pressure at 50 °C more than 110 kPa but not more than 175 kPa)
LGBF		FL	2				S2 S20	33	1999	TARS, LIQUID, including road asphalt and oils, bitumen and cut backs (vapour pressure at 50 °C not more than 110 kPa)
LGBF		FL	3				S2	30	1999	TARS, LIQUID, including road asphalt and oils, bitumen and cut backs
L4BN		FL	3				S2	33	1999	TARS, LIQUID, including road asphalt and oils, bitumen and cut backs (having a flash-point below 23 °C and viscous according to 2.2.3.1.4) (vapour pressure at 50 °C more than 175 kPa)
L.15BN		FL	3				S2	33	1999	TARS, LIQUID, including road asphalt and oils, bitumen and cut backs (having a flash-point below 23 °C and viscous according to 2.2.3.1.4) (vapour pressure at 50 °C more than 110 kPa but not more than 175 kPa)
LGBF		FL	3				S2	33	1999	TARS, LIQUID, including road asphalt and oils, bitumen and cut backs (having a flash-point below 23 °C and viscous according to 2.2.3.1.4) (vapour pressure at 50 °C not more than 110 kPa)

UN No.	Name and description	Class	Classification code	Packing group	Labels	Special provisions	Limited quantities	Packaging			Portable tanks and bulk containers	
								Packing instructions	Special packing provisions	Mixed packing provisions	Instructions	Special provisions
	3.1.2	2.2	2.2	2.1.1.3	5.2.2	3.3	3.4.6	4.1.4	4.1.4	4.1.10	4.2.5.2 7.3.2	4.2.5.3
(1)	(2)	(3a)	(3b)	(4)	(5)	(6)	(7)	(8)	(9a)	(9b)	(10)	(11)
2000	CELLULOID in block, rods, rolls, sheets, tubes, etc., except scrap	4.1	F1	III	4.1	502	LQ9	P002 LP02 R001	PP7	MP11		
2001	COBALT NAPHTHENATES, POWDER	4.1	F3	III	4.1		LQ9	P002 IBC08 LP02 R001	B3	MP11	T1	TP33
2002	CELLULOID, SCRAP	4.2	S2	III	4.2	526 592	LQ0	P002 IBC08 LP02 R001	PP8 B3	MP14		
2004	MAGNESIUM DIAMIDE	4.2	S4	II	4.2		LQ0	P410 IBC06		MP14	T3	TP33
2005	MAGNESIUM DIPHENYL	4.2	SW	I	4.2 +4.3	320	LQ0	P404		MP2	T21	TP7 TP33
2006	PLASTICS, NITROCELLULOSE-BASED, SELF-HEATING, N.O.S.	4.2	S2	III	4.2	274 528	LQ0	P002 R001		MP14		
2008	ZIRCONIUM POWDER, DRY	4.2	S4	I	4.2	524 540	LQ0	P404		MP13	T21	TP7 TP33
2008	ZIRCONIUM POWDER, DRY	4.2	S4	II	4.2	524 540	LQ0	P410 IBC06		MP14	T3	TP33
2008	ZIRCONIUM POWDER, DRY	4.2	S4	III	4.2	540	LQ0	P002 IBC08 LP02 R001	B3	MP14	T1	TP33
2009	ZIRCONIUM, DRY, finished sheets, strip or coiled wire	4.2	S4	III	4.2	524 592	LQ0	P002 LP02 R001		MP14		
2010	MAGNESIUM HYDRIDE	4.3	W2	I	4.3		LQ0	P403		MP2		
2011	MAGNESIUM PHOSPHIDE	4.3	WT2	I	4.3 +6.1		LQ0	P403		MP2		
2012	POTASSIUM PHOSPHIDE	4.3	WT2	I	4.3 +6.1		LQ0	P403		MP2		
2013	STRONTIUM PHOSPHIDE	4.3	WT2	I	4.3 +6.1		LQ0	P403		MP2		
2014	HYDROGEN PEROXIDE, AQUEOUS SOLUTION with not less than 20% but not more than 60% hydrogen peroxide (stabilized as necessary)	5.1	OC1	II	5.1 +8		LQ10	P504 IBC02	PP10 B5	MP15	T7	TP2 TP6 TP24
2015	HYDROGEN PEROXIDE, AQUEOUS SOLUTION, STABILIZED with more than 70% hydrogen peroxide	5.1	OC1	I	5.1 +8	640N	LQ0	P501		MP2	T10	TP2 TP6 TP24
2015	HYDROGEN PEROXIDE, AQUEOUS SOLUTION, STABILIZED with more than 60% hydrogen peroxide and not more than 70% hydrogen peroxide	5.1	OC1	I	5.1 +8	640O	LQ0	P501		MP2	T10	TP2 TP6 TP24
2016	AMMUNITION, TOXIC, NON-EXPLOSIVE without burster or expelling charge, non-fuzed	6.1	T2	II	6.1		LQ0	P600		MP10		
2017	AMMUNITION, TEAR-PRODUCING, NON-EXPLOSIVE without burster or expelling charge, non-fuzed	6.1	TC2	II	6.1 +8		LQ0	P600				
2018	CHLOROANILINES, SOLID	6.1	T2	II	6.1		LQ18	P002 IBC08	B4	MP10	T3	TP33

ADR tank		Vehicle for tank carriage	Transport category	Special provisions for carriage				Hazard identifi-cation No.	UN No.	Name and description
Tank code	Special provisions			Packages	Bulk	Loading, unloading and handling	Operation			
4.3	4.3.5, 6.8.4	9.1.1.2	1.1.3.6	7.2.4	7.3.3	7.5.11	8.5	5.3.2.3		3.1.2
(12)	(13)	(14)	(15)	(16)	(17)	(18)	(19)	(20)	(1)	(2)
			3						2000	CELLULOID in block, rods, rolls, sheets, tubes, etc., except scrap
SGAV		AT	3		VV1			40	2001	COBALT NAPHTHENATES, POWDER
			3	V1					2002	CELLULOID, SCRAP
SGAN		AT	2	V1 V12				40	2004	MAGNESIUM DIAMIDE
L21DH	TU4 TU14 TU22 TC1 TE21 TM1	AT	0	V1			S20	X333	2005	MAGNESIUM DIPHENYL
			3	V1					2006	PLASTICS, NITROCELLULOSE-BASED, SELF-HEATING, N.O.S.
		AT	0	V1			S20	43	2008	ZIRCONIUM POWDER, DRY
SGAN		AT	2	V1 V12				40	2008	ZIRCONIUM POWDER, DRY
SGAN		AT	3	V1	VV4			40	2008	ZIRCONIUM POWDER, DRY
			3	V1	VV4			40	2009	ZIRCONIUM, DRY, finished sheets, strip or coiled wire
			1	V1		CV23	S20		2010	MAGNESIUM HYDRIDE
			1	V1		CV23 CV28	S20		2011	MAGNESIUM PHOSPHIDE
			1	V1		CV23 CV28	S20		2012	POTASSIUM PHOSPHIDE
			1	V1		CV23 CV28	S20		2013	STRONTIUM PHOSPHIDE
L4BV(+)	TU3 TC2 TE8 TE11 TT1	AT	2			CV24		58	2014	HYDROGEN PEROXIDE, AQUEOUS SOLUTION with not less than 20% but not more than 60% hydrogen peroxide (stabilized as necessary)
L4DV(+)	TU3 TU28 TC2 TE8 TE9 TT1	OX	1	V5		CV24	S20	559	2015	HYDROGEN PEROXIDE, AQUEOUS SOLUTION, STABILIZED with more than 70% hydrogen peroxide
L4BV(+)	TU3 TU28 TC2 TE7 TE8 TE9 TT1	OX	1	V5		CV24	S20	559	2015	HYDROGEN PEROXIDE, AQUEOUS SOLUTION, STABILIZED with more than 60% hydrogen peroxide and not more than 70% hydrogen peroxide
			2			CV13 CV28	S9 S19		2016	AMMUNITION, TOXIC, NON-EXPLOSIVE without burster or expelling charge, non-fuzed
			2			CV13 CV28	S9 S19		2017	AMMUNITION, TEAR-PRODUCING, NON-EXPLOSIVE without burster or expelling charge, non-fuzed
SGAH L4BH	TU15 TE15 TE19	AT	2	V11		CV13 CV28	S9 S19	60	2018	CHLOROANILINES, SOLID

UN No.	Name and description	Class	Classification code	Packing group	Labels	Special provisions	Limited quantities	Packaging			Portable tanks and bulk containers	
								Packing instructions	Special packing provisions	Mixed packing provisions	Instructions	Special provisions
	3.1.2	2.2	2.2	2.1.1.3	5.2.2	3.3	3.4.6	4.1.4	4.1.4	4.1.10	4.2.5.2 7.3.2	4.2.5.3
(1)	(2)	(3a)	(3b)	(4)	(5)	(6)	(7)	(8)	(9a)	(9b)	(10)	(11)
2019	CHLOROANILINES, LIQUID	6.1	T1	II	6.1		LQ17	P001 IBC02		MP15	T7	TP2
2020	CHLOROPHENOLS, SOLID	6.1	T2	III	6.1	205	LQ9	P002 IBC08 LP02 R001	B3	MP10	T1	TP33
2021	CHLOROPHENOLS, LIQUID	6.1	T1	III	6.1		LQ19	P001 IBC03 LP01 R001		MP15	T4	TP1
2022	CRESYLIC ACID	6.1	TC1	II	6.1 +8		LQ17	P001 IBC02		MP15	T7	TP2
2023	EPICHLOROHYDRIN	6.1	TF1	II	6.1 +3	279	LQ17	P001 IBC02		MP15	T7	TP2
2024	MERCURY COMPOUND, LIQUID, N.O.S.	6.1	T4	I	6.1	43 274	LQ0	P001		MP8 MP17		
2024	MERCURY COMPOUND, LIQUID, N.O.S.	6.1	T4	II	6.1	43 274	LQ17	P001 IBC02		MP15		
2024	MERCURY COMPOUND, LIQUID, N.O.S.	6.1	T4	III	6.1	43 274	LQ19	P001 IBC03 LP01 R001		MP15		
2025	MERCURY COMPOUND, SOLID, N.O.S.	6.1	T5	I	6.1	43 274 529 585	LQ0	P002 IBC07		MP18	T6	TP9 TP33
2025	MERCURY COMPOUND, SOLID, N.O.S.	6.1	T5	II	6.1	43 274 529 585	LQ18	P002 IBC08	B4	MP10	T3	TP33
2025	MERCURY COMPOUND, SOLID, N.O.S.	6.1	T5	III	6.1	43 274 529 585	LQ9	P002 IBC08 LP02 R001	B3	MP10	T1	TP33
2026	PHENYLMERCURIC COMPOUND, N.O.S.	6.1	T3	I	6.1	43 274	LQ0	P002 IBC07		MP18	T6	TP9 TP33
2026	PHENYLMERCURIC COMPOUND, N.O.S.	6.1	T3	II	6.1	43 274	LQ18	P002 IBC08	B4	MP10	T3	TP33
2026	PHENYLMERCURIC COMPOUND, N.O.S.	6.1	T3	III	6.1	43 274	LQ9	P002 IBC08 LP02 R001	B3	MP10	T1	TP33
2027	SODIUM ARSENITE, SOLID	6.1	T5	II	6.1	43	LQ18	P002 IBC08	B4	MP10	T3	TP33
2028	BOMBS, SMOKE, NON-EXPLOSIVE with corrosive liquid, without initiating device	8	C11	II	8		LQ0	P803				
2029	HYDRAZINE, ANHYDROUS	8	CFT	I	8 +3 +6.1		LQ0	P001		MP8 MP17		
2030	HYDRAZINE AQUEOUS SOLUTION, with more than 37% hydrazine by mass	8	CT1	I	8 +6.1	298 530	LQ0	P001		MP8 MP17	T20	TP2
2030	HYDRAZINE AQUEOUS SOLUTION, with more than 37% hydrazine by mass	8	CT1	II	8 +6.1	530	LQ22	P001 IBC02		MP15	T15	TP2
2030	HYDRAZINE AQUEOUS SOLUTION, with more than 37% hydrazine by mass	8	CT1	III	8 +6.1	530	LQ19	P001 IBC03 LP01 R001		MP15	T4	TP2

ADR tank		Vehicle for tank carriage	Transport category	Special provisions for carriage				Hazard identifi-cation No.	UN No.	Name and description
Tank code	Special provisions			Packages	Bulk	Loading, unloading and handling	Operation			
4.3	4.3.5, 6.8.4	9.1.1.2	1.1.3.6	7.2.4	7.3.3	7.5.11	8.5	5.3.2.3		3.1.2
(12)	(13)	(14)	(15)	(16)	(17)	(18)	(19)	(20)	(1)	(2)
L4BH	TU15 TE15 TE19	AT	2			CV13 CV28	S9 S19	60	2019	CHLOROANILINES, LIQUID
SGAH	TU15 TE15 TE19	AT	2		VV9b	CV13 CV28	S9	60	2020	CHLOROPHENOLS, SOLID
L4BH	TU15 TE15 TE19	AT	2			CV13 CV28	S9	60	2021	CHLOROPHENOLS, LIQUID
L4BH	TU15 TE15 TE19	AT	2			CV13 CV28	S9 S19	68	2022	CRESYLIC ACID
L4BH	TU15 TE15 TE19	FL	2			CV13 CV28	S2 S9 S19	63	2023	EPICHLOROHYDRIN
L10CH	TU14 TU15 TE19 TE21	AT	1			CV1 CV13 CV28	S9 S17	66	2024	MERCURY COMPOUND, LIQUID, N.O.S.
L4BH	TU15 TE15 TE19	AT	2			CV13 CV28	S9 S19	60	2024	MERCURY COMPOUND, LIQUID, N.O.S.
L4BH	TU15 TE15 TE19	AT	2			CV13 CV28	S9	60	2024	MERCURY COMPOUND, LIQUID, N.O.S.
S10AH	TU15 TE19	AT	1	V10 V12		CV1 CV13 CV28	S9 S17	66	2025	MERCURY COMPOUND, SOLID, N.O.S.
SGAH	TU15 TE15 TE19	AT	2	V11		CV13 CV28	S9 S19	60	2025	MERCURY COMPOUND, SOLID, N.O.S.
SGAH	TU15 TE15 TE19	AT	2		VV9b	CV13 CV28	S9	60	2025	MERCURY COMPOUND, SOLID, N.O.S.
S10AH L10CH	TU14 TU15 TE19 TE21	AT	1	V10 V12		CV1 CV13 CV28	S9 S17	66	2026	PHENYLMERCURIC COMPOUND, N.O.S.
SGAH L4BH	TU15 TE15 TE19	AT	2	V11		CV13 CV28	S9 S19	60	2026	PHENYLMERCURIC COMPOUND, N.O.S.
SGAH L4BH	TU15 TE15 TE19	AT	2		VV9b	CV13 CV28	S9	60	2026	PHENYLMERCURIC COMPOUND, N.O.S.
SGAH	TU15 TE15 TE19	AT	2	V11		CV13 CV28	S9 S19	60	2027	SODIUM ARSENITE, SOLID
			2						2028	BOMBS, SMOKE, NON-EXPLOSIVE with corrosive liquid, without initiating device
			1			CV13 CV28	S2 S20		2029	HYDRAZINE, ANHYDROUS
L10BH		AT	1			CV13 CV28		886	2030	HYDRAZINE AQUEOUS SOLUTION, with more than 37% hydrazine by mass
L4BN		AT	2			CV13 CV28		86	2030	HYDRAZINE AQUEOUS SOLUTION, with more than 37% hydrazine by mass
L4BN		AT	3			CV13 CV28		86	2030	HYDRAZINE AQUEOUS SOLUTION, with more than 37% hydrazine by mass

UN No.	Name and description	Class	Classification code	Packing group	Labels	Special provisions	Limited quantities	Packaging			Portable tanks and bulk containers	
								Packing instructions	Special packing provisions	Mixed packing provisions	Instructions	Special provisions
	3.1.2	2.2	2.2	2.1.1.3	5.2.2	3.3	3.4.6	4.1.4	4.1.4	4.1.10	4.2.5.2 7.3.2	4.2.5.3
(1)	(2)	(3a)	(3b)	(4)	(5)	(6)	(7)	(8)	(9a)	(9b)	(10)	(11)
2031	NITRIC ACID, other than red fuming, with more than 70% nitric acid	8	CO1	I	8 +5.1		LQ0	P001	PP81	MP8 MP17	T10	TP2 TP12
2031	NITRIC ACID, other than red fuming, with not more than 70% nitric acid	8	CO1	II	8		LQ22	P001 IBC02	PP81	MP15	T8	TP2 TP12
2032	NITRIC ACID, RED FUMING	8	COT	I	8 +5.1 +6.1		LQ0	P602		MP8 MP17	T20	TP2 TP12
2033	POTASSIUM MONOXIDE	8	C6	II	8		LQ23	P002 IBC08	B4	MP10	T3	TP33
2034	HYDROGEN AND METHANE MIXTURE, COMPRESSED	2	1F		2.1		LQ0	P200		MP9	(M)	
2035	1,1,1-TRIFLUOROETHANE (REFRIGERANT GAS R 143a)	2	2F		2.1		LQ0	P200		MP9	(M) T50	
2036	XENON	2	2A		2.2		LQ1	P200		MP9	(M)	
2037	RECEPTACLES, SMALL, CONTAINING GAS (GAS CARTRIDGES) without a release device, non-refillable	2	5A		2.2	191 303	LQ2	P204		MP9		
2037	RECEPTACLES, SMALL, CONTAINING GAS (GAS CARTRIDGES) without a release device, non-refillable	2	5F		2.1	191 303	LQ2	P204		MP9		
2037	RECEPTACLES, SMALL, CONTAINING GAS (GAS CARTRIDGES) without a release device, non-refillable	2	5O		2.2 +5.1	191 303	LQ2	P204		MP9		
2037	RECEPTACLES, SMALL, CONTAINING GAS (GAS CARTRIDGES) without a release device, non-refillable	2	5T		2.3	303	LQ1	P204		MP9		
2037	RECEPTACLES, SMALL, CONTAINING GAS (GAS CARTRIDGES) without a release device, non-refillable	2	5TC		2.3 +8	303	LQ1	P204		MP9		
2037	RECEPTACLES, SMALL, CONTAINING GAS (GAS CARTRIDGES) without a release device, non-refillable	2	5TF		2.3 +2.1	303	LQ1	P204		MP9		
2037	RECEPTACLES, SMALL, CONTAINING GAS (GAS CARTRIDGES) without a release device, non-refillable	2	5TFC		2.3 +2.1 +8	303	LQ1	P204		MP9		
2037	RECEPTACLES, SMALL, CONTAINING GAS (GAS CARTRIDGES) without a release device, non-refillable	2	5TO		2.3 +5.1	303	LQ1	P204		MP9		
2037	RECEPTACLES, SMALL, CONTAINING GAS (GAS CARTRIDGES) without a release device, non-refillable	2	5TOC		2.3 +5.1 +8	303	LQ1	P204		MP9		

ADR tank		Vehicle for tank carriage	Transport category	Special provisions for carriage				Hazard identification No.	UN No.	Name and description
Tank code	Special provisions			Packages	Bulk	Loading, unloading and handling	Operation			
4.3	4.3.5, 6.8.4	9.1.1.2	1.1.3.6	7.2.4	7.3.3	7.5.11	8.5	5.3.2.3		3.1.2
(12)	(13)	(14)	(15)	(16)	(17)	(18)	(19)	(20)	(1)	(2)
L10BH	TC6 TT1	AT	1			CV24	S20	885	2031	NITRIC ACID, other than red fuming, with more than 70% nitric acid
L4BN		AT	2					80	2031	NITRIC ACID, other than red fuming, with not more than 70% nitric acid
L10BH	TC6 TT1	AT	1			CV13 CV24 CV28	S20	856	2032	NITRIC ACID, RED FUMING
SGAN		AT	2	V11				80	2033	POTASSIUM MONOXIDE
CxBN(M)		FL	2			CV9 CV10 CV36	S2	23	2034	HYDROGEN AND METHANE MIXTURE, COMPRESSED
PxBN(M)		FL	2			CV9 CV10 CV36	S2 S20	23	2035	1,1,1-TRIFLUOROETHANE (REFRIGERANT GAS R 143a)
PxBN(M)		AT	3			CV9 CV10 CV36		20	2036	XENON
			3			CV9 CV12			2037	RECEPTACLES, SMALL, CONTAINING GAS (GAS CARTRIDGES) without a release device, non-refillable
			2			CV9 CV12	S2		2037	RECEPTACLES, SMALL, CONTAINING GAS (GAS CARTRIDGES) without a release device, non-refillable
			3			CV9 CV12			2037	RECEPTACLES, SMALL, CONTAINING GAS (GAS CARTRIDGES) without a release device, non-refillable
			1			CV9 CV12	S7		2037	RECEPTACLES, SMALL, CONTAINING GAS (GAS CARTRIDGES) without a release device, non-refillable
			1			CV9 CV12	S7		2037	RECEPTACLES, SMALL, CONTAINING GAS (GAS CARTRIDGES) without a release device, non-refillable
			1			CV9 CV12	S2 S7		2037	RECEPTACLES, SMALL, CONTAINING GAS (GAS CARTRIDGES) without a release device, non-refillable
			1			CV9 CV12	S2 S7		2037	RECEPTACLES, SMALL, CONTAINING GAS (GAS CARTRIDGES) without a release device, non-refillable
			1			CV9 CV12	S7		2037	RECEPTACLES, SMALL, CONTAINING GAS (GAS CARTRIDGES) without a release device, non-refillable
			1			CV9 CV12	S7		2037	RECEPTACLES, SMALL, CONTAINING GAS (GAS CARTRIDGES) without a release device, non-refillable

UN No.	Name and description	Class	Classification code	Packing group	Labels	Special provisions	Limited quantities	Packaging			Portable tanks and bulk containers	
								Packing instructions	Special packing provisions	Mixed packing provisions	Instructions	Special provisions
	3.1.2	2.2	2.2	2.1.1.3	5.2.2	3.3	3.4.6	4.1.4	4.1.4	4.1.10	4.2.5.2 7.3.2	4.2.5.3
(1)	(2)	(3a)	(3b)	(4)	(5)	(6)	(7)	(8)	(9a)	(9b)	(10)	(11)
2038	DINITROTOLUENES, LIQUID	6.1	T1	II	6.1		LQ17	P001 IBC02		MP15	T7	TP2
2044	2,2-DIMETHYLPROPANE	2	2F		2.1		LQ0	P200		MP9	(M)	
2045	ISOBUTYRALDEHYDE (ISOBUTYL ALDEHYDE)	3	F1	II	3		LQ4	P001 IBC02 R001		MP19	T4	TP1
2046	CYMENES	3	F1	III	3		LQ7	P001 IBC03 LP01 R001		MP19	T2	TP1
2047	DICHLOROPROPENES	3	F1	II	3		LQ4	P001 IBC02 R001		MP19	T4	TP1
2047	DICHLOROPROPENES	3	F1	III	3		LQ7	P001 IBC03 LP01 R001		MP19	T2	TP1
2048	DICYCLOPENTADIENE	3	F1	III	3		LQ7	P001 IBC03 LP01 R001		MP19	T2	TP1
2049	DIETHYLBENZENE	3	F1	III	3		LQ7	P001 IBC03 LP01 R001		MP19	T2	TP1
2050	DIISOBUTYLENE, ISOMERIC COMPOUNDS	3	F1	II	3		LQ4	P001 IBC02 R001		MP19	T4	TP1
2051	2-DIMETHYLAMINO-ETHANOL	8	CF1	II	8 +3		LQ22	P001 IBC02		MP15	T7	TP2
2052	DIPENTENE	3	F1	III	3		LQ7	P001 IBC03 LP01 R001		MP19	T2	TP1
2053	METHYL ISOBUTYL CARBINOL	3	F1	III	3		LQ7	P001 IBC03 LP01 R001		MP19	T2	TP1
2054	MORPHOLINE	8	CF1	I	8 +3		LQ0	P001		MP8 MP17	T10	TP2
2055	STYRENE MONOMER, STABILIZED	3	F1	III	3		LQ7	P001 IBC03 LP01 R001		MP19	T2	TP1
2056	TETRAHYDROFURAN	3	F1	II	3		LQ4	P001 IBC02 R001		MP19	T4	TP1
2057	TRIPROPYLENE	3	F1	II	3		LQ4	P001 IBC02 R001		MP19	T4	TP1
2057	TRIPROPYLENE	3	F1	III	3		LQ7	P001 IBC03 LP01 R001		MP19	T2	TP1
2058	VALERALDEHYDE	3	F1	II	3		LQ4	P001 IBC02 R001		MP19	T4	TP1
2059	NITROCELLULOSE SOLUTION, FLAMMABLE with not more than 12.6% nitrogen, by dry mass, and not more than 55% nitrocellulose (vapour pressure at 50 °C more than 175 kPa)	3	D	I	3	198 531 640A	LQ3	P001		MP7 MP17	T11	TP1 TP8 TP27

ADR tank		Vehicle for tank carriage	Transport category	Special provisions for carriage				Hazard identifi-cation No.	UN No.	Name and description
Tank code	Special provisions			Packages	Bulk	Loading, unloading and handling	Operation			
4.3	4.3.5, 6.8.4	9.1.1.2	1.1.3.6	7.2.4	7.3.3	7.5.11	8.5	5.3.2.3		3.1.2
(12)	(13)	(14)	(15)	(16)	(17)	(18)	(19)	(20)	(1)	(2)
L4BH	TU15 TE15 TE19	AT	2			CV13 CV28	S9 S19	60	2038	DINITROTOLUENES, LIQUID
PxBN(M)		FL	2			CV9 CV10 CV36	S2 S20	23	2044	2,2-DIMETHYLPROPANE
LGBF		FL	2				S2 S20	33	2045	ISOBUTYRALDEHYDE (ISOBUTYL ALDEHYDE)
LGBF		FL	3				S2	30	2046	CYMENES
LGBF		FL	2				S2 S20	33	2047	DICHLOROPROPENES
LGBF		FL	3				S2	30	2047	DICHLOROPROPENES
LGBF		FL	3				S2	30	2048	DICYCLOPENTADIENE
LGBF		FL	3				S2	30	2049	DIETHYLBENZENE
LGBF		FL	2				S2 S20	33	2050	DIISOBUTYLENE, ISOMERIC COMPOUNDS
L4BN		FL	2				S2	83	2051	2-DIMETHYLAMINO-ETHANOL
LGBF		FL	3				S2	30	2052	DIPENTENE
LGBF		FL	3				S2	30	2053	METHYL ISOBUTYL CARBINOL
L10BH		FL	1				S2 S20	883	2054	MORPHOLINE
LGBF		FL	3				S2	39	2055	STYRENE MONOMER, STABILIZED
LGBF		FL	2				S2 S20	33	2056	TETRAHYDROFURAN
LGBF		FL	2				S2 S20	33	2057	TRIPROPYLENE
LGBF		FL	3				S2	30	2057	TRIPROPYLENE
LGBF		FL	2				S2 S20	33	2058	VALERALDEHYDE
L4BN		FL	1				S2 S20	33	2059	NITROCELLULOSE SOLUTION, FLAMMABLE with not more than 12.6% nitrogen, by dry mass, and not more than 55% nitrocellulose (vapour pressure at 50 °C more than 175 kPa)

UN No.	Name and description	Class	Classification code	Packing group	Labels	Special provisions	Limited quantities	Packaging			Portable tanks and bulk containers	
								Packing instructions	Special packing provisions	Mixed packing provisions	Instructions	Special provisions
	3.1.2	2.2	2.2	2.1.1.3	5.2.2	3.3	3.4.6	4.1.4	4.1.4	4.1.10	4.2.5.2 7.3.2	4.2.5.3
(1)	(2)	(3a)	(3b)	(4)	(5)	(6)	(7)	(8)	(9a)	(9b)	(10)	(11)
2059	NITROCELLULOSE SOLUTION, FLAMMABLE with not more than 12.6% nitrogen, by dry mass, and not more than 55% nitrocellulose (vapour pressure at 50 °C more than 110 kPa but not more than 175 kPa)	3	D	I	3	198 531 640B	LQ3	P001		MP7 MP17	T11	TP1 TP8 TP27
2059	NITROCELLULOSE SOLUTION, FLAMMABLE with not more than 12.6% nitrogen, by dry mass, and not more than 55% nitrocellulose (vapour pressure at 50 °C more than 110 kPa but not more than 175 kPa)	3	D	II	3	198 531 640C	LQ4	P001		MP19	T4	TP1 TP8
2059	NITROCELLULOSE SOLUTION, FLAMMABLE with not more than 12.6% nitrogen, by dry mass, and not more than 55% nitrocellulose (vapour pressure at 50 °C not more than 110 kPa)	3	D	II	3	198 531 640D	LQ4	P001 R001		MP19	T4	TP1 TP8
2059	NITROCELLULOSE SOLUTION, FLAMMABLE with not more than 12.6% nitrogen, by dry mass, and not more than 55% nitrocellulose	3	D	III	3	198 531	LQ7	P001 LP01 R001		MP19	T2	TP1
2067	AMMONIUM NITRATE BASED FERTILIZER	5.1	O2	III	5.1	186 306 307	LQ12	P002 IBC08 LP02 R001	B3	MP10	T1 BK1 BK2	TP33
2071	Ammonium nitrate based fertilizer, uniform mixtures of the nitrogen/phosphate, nitrogen/potash or nitrogen/phosphate/potash type, containing not more than 70% ammonium nitrate and not more than 0.4% total combustible/organic material calculated as carbon or with not more than 45% ammonium nitrate and unrestricted combustible material	9	M11	NOT SUBJECT TO ADR								
2073	AMMONIA SOLUTION, relative density less than 0.880 at 15 °C in water, with more than 35% but not more than 50% ammonia	2	4A		2.2	532	LQ1	P200		MP9	(M)	
2074	ACRYLAMIDE, SOLID	6.1	T2	III	6.1		LQ9	P002 IBC08 LP02 R001	B3	MP10	T1	TP33
2075	CHLORAL, ANHYDROUS, STABILIZED	6.1	T1	II	6.1		LQ17	P001 IBC02		MP15	T7	TP2
2076	CRESOLS, LIQUID	6.1	TC1	II	6.1 +8		LQ17	P001 IBC02		MP15	T7	TP2

ADR tank		Vehicle for tank carriage	Transport category	Special provisions for carriage				Hazard identifi-cation No.	UN No.	Name and description
Tank code	Special provisions			Packages	Bulk	Loading, unloading and handling	Operation			
4.3	4.3.5, 6.8.4	9.1.1.2	1.1.3.6	7.2.4	7.3.3	7.5.11	8.5	5.3.2.3		3.1.2
(12)	(13)	(14)	(15)	(16)	(17)	(18)	(19)	(20)	(1)	(2)
L1.5BN		FL	1				S2 S20	33	2059	NITROCELLULOSE SOLUTION, FLAMMABLE with not more than 12.6% nitrogen, by dry mass, and not more than 55% nitrocellulose (vapour pressure at 50 °C more than 110 kPa but not more than 175 kPa)
L1.5BN		FL	2				S2 S20	33	2059	NITROCELLULOSE SOLUTION, FLAMMABLE with not more than 12.6% nitrogen, by dry mass, and not more than 55% nitrocellulose (vapour pressure at 50 °C more than 110 kPa but not more than 175 kPa)
LGBF		FL	2				S2 S20	33	2059	NITROCELLULOSE SOLUTION, FLAMMABLE with not more than 12.6% nitrogen, by dry mass, and not more than 55% nitrocellulose (vapour pressure at 50 °C not more than 110 kPa)
LGBF		FL	3				S2	30	2059	NITROCELLULOSE SOLUTION, FLAMMABLE with not more than 12.6% nitrogen, by dry mass, and not more than 55% nitrocellulose
SGAV	TU3	AT	3		VV8	CV24		50	2067	AMMONIUM NITRATE BASED FERTILIZER
NOT SUBJECT TO ADR									2071	Ammonium nitrate based fertilizer, uniform mixtures of the nitrogen/phosphate, nitrogen/potash or nitrogen/phosphate/potash type, containing not more than 70% ammonium nitrate and not more than 0.4% total combustible/organic material calculated as carbon or with not more than 45% ammonium nitrate and unrestricted combustible material
PxBN(M)		AT	3			CV9 CV10		20	2073	AMMONIA SOLUTION, relative density less than 0.880 at 15 °C in water, with more than 35% but not more than 50% ammonia
SGAH L4BH	TU15 TE15 TE19	AT	2		VV9b	CV13 CV28	S9	60	2074	ACRYLAMIDE, SOLID
L4BH	TU15 TE15 TE19	AT	2			CV13 CV28	S9 S19	69	2075	CHLORAL, ANHYDROUS, STABILIZED
L4BH	TU15 TE15 TE19	AT	2			CV13 CV28	S9 S19	68	2076	CRESOLS, LIQUID

UN No.	Name and description	Class	Classification code	Packing group	Labels	Special provisions	Limited quantities	Packaging			Portable tanks and bulk containers	
								Packing instructions	Special packing provisions	Mixed packing provisions	Instructions	Special provisions
	3.1.2	2.2	2.2	2.1.1.3	5.2.2	3.3	3.4.6	4.1.4	4.1.4	4.1.10	4.2.5.2 7.3.2	4.2.5.3
(1)	(2)	(3a)	(3b)	(4)	(5)	(6)	(7)	(8)	(9a)	(9b)	(10)	(11)
2077	alpha-NAPHTHYLAMINE	6.1	T2	III	6.1		LQ9	P002 IBC08 LP02 R001	B3	MP10	T1	TP33
2078	TOLUENE DIISOCYANATE	6.1	T1	II	6.1	279	LQ17	P001 IBC02		MP15	T7	TP2
2079	DIETHYLENETRIAMINE	8	C7	II	8		LQ22	P001 IBC02		MP15	T7	TP2
2186	HYDROGEN CHLORIDE, REFRIGERATED LIQUID	2	3TC	CARRIAGE PROHIBITED								
2187	CARBON DIOXIDE, REFRIGERATED LIQUID	2	3A		2.2	593	LQ1	P203		MP9	T75	TP5
2188	ARSINE	2	2TF		2.3 +2.1		LQ0	P200		MP9		
2189	DICHLOROSILANE	2	2TFC		2.3 +2.1 +8		LQ0	P200		MP9	(M)	
2190	OXYGEN DIFLUORIDE, COMPRESSED	2	1TOC		2.3 +5.1 +8		LQ0	P200		MP9		
2191	SULPHURYL FLUORIDE	2	2T		2.3		LQ0	P200		MP9	(M)	
2192	GERMANE	2	2TF		2.3 +2.1	632	LQ0	P200		MP9	(M)	
2193	HEXAFLUOROETHANE (REFRIGERANT GAS R 116)	2	2A		2.2		LQ1	P200		MP9	(M)	
2194	SELENIUM HEXAFLUORIDE	2	2TC		2.3 +8		LQ0	P200		MP9		
2195	TELLURIUM HEXAFLUORIDE	2	2TC		2.3 +8		LQ0	P200		MP9		
2196	TUNGSTEN HEXAFLUORIDE	2	2TC		2.3 +8		LQ0	P200		MP9		
2197	HYDROGEN IODIDE, ANHYDROUS	2	2TC		2.3 +8		LQ0	P200		MP9	(M)	
2198	PHOSPHORUS PENTAFLUORIDE	2	2TC		2.3 +8		LQ0	P200		MP9		
2199	PHOSPHINE	2	2TF		2.3 +2.1	632	LQ0	P200		MP9		
2200	PROPADIENE, STABILIZED	2	2F		2.1		LQ0	P200		MP9	(M)	
2201	NITROUS OXIDE, REFRIGERATED LIQUID	2	3O		2.2 +5.1		LQ0	P203		MP9	T75	TP5 TP22
2202	HYDROGEN SELENIDE, ANHYDROUS	2	2TF		2.3 +2.1		LQ0	P200		MP9		
2203	SILANE	2	2F		2.1	632	LQ0	P200		MP9	(M)	
2204	CARBONYL SULPHIDE	2	2TF		2.3 +2.1		LQ0	P200		MP9	(M)	

ADR tank		Vehicle for tank carriage	Transport category	Special provisions for carriage				Hazard identifi-cation No.	UN No.	Name and description
Tank code	Special provisions			Packages	Bulk	Loading, unloading and handling	Operation			
4.3	4.3.5, 6.8.4	9.1.1.2	1.1.3.6	7.2.4	7.3.3	7.5.11	8.5	5.3.2.3		3.1.2
(12)	(13)	(14)	(15)	(16)	(17)	(18)	(19)	(20)	(1)	(2)
SGAH L4BH	TU15 TE15 TE19	AT	2		VV9b	CV13 CV28	S9	60	2077	alpha-NAPHTHYLAMINE
L4BH	TU15 TE15 TE19	AT	2			CV13 CV28	S9 S19	60	2078	TOLUENE DIISOCYANATE
L4BN		AT	2					80	2079	DIETHYLENETRIAMINE
CARRIAGE PROHIBITED									2186	HYDROGEN CHLORIDE, REFRIGERATED LIQUID
RxBN	TU19	AT	3	V5		CV9 CV11 CV36	S20	22	2187	CARBON DIOXIDE, REFRIGERATED LIQUID
			1			CV9 CV10 CV36	S2 S7 S17		2188	ARSINE
PxBH(M)		FL	1			CV9 CV10 CV36	S2 S7 S17	263	2189	DICHLOROSILANE
			1			CV9 CV10 CV36	S7 S17		2190	OXYGEN DIFLUORIDE, COMPRESSED
PxBH(M)		AT	1			CV9 CV10 CV36	S7 S17	26	2191	SULPHURYL FLUORIDE
		FL	1			CV9 CV10 CV36	S2 S7 S17	263	2192	GERMANE
PxBN(M)		AT	3			CV9 CV10 CV36		20	2193	HEXAFLUOROETHANE (REFRIGERANT GAS R 116)
			1			CV9 CV10 CV36	S7 S17		2194	SELENIUM HEXAFLUORIDE
			1			CV9 CV10 CV36	S7 S17		2195	TELLURIUM HEXAFLUORIDE
			1			CV9 CV10 CV36	S7 S17		2196	TUNGSTEN HEXAFLUORIDE
PxBH(M)		AT	1			CV9 CV10 CV36	S7 S17	268	2197	HYDROGEN IODIDE, ANHYDROUS
			1			CV9 CV10 CV36	S7 S17		2198	PHOSPHORUS PENTAFLUORIDE
			1			CV9 CV10 CV36	S2 S7 S17		2199	PHOSPHINE
PxBN(M)		FL	2			CV9 CV10 CV36	S2 S20	239	2200	PROPADIENE, STABILIZED
RxBN	TU7 TU19	AT	3	V5		CV9 CV11 CV36	S20	225	2201	NITROUS OXIDE, REFRIGERATED LIQUID
			1			CV9 CV10 CV36	S2 S7 S17		2202	HYDROGEN SELENIDE, ANHYDROUS
PxBN(M)		FL	2			CV9 CV10 CV36	S2	23	2203	SILANE
PxBH(M)		FL	1			CV9 CV10 CV36	S2 S7 S17	263	2204	CARBONYL SULPHIDE

UN No.	Name and description	Class	Classification code	Packing group	Labels	Special provisions	Limited quantities	Packaging			Portable tanks and bulk containers	
								Packing instructions	Special packing provisions	Mixed packing provisions	Instructions	Special provisions
	3.1.2	2.2	2.2	2.1.1.3	5.2.2	3.3	3.4.6	4.1.4	4.1.4	4.1.10	4.2.5.2 7.3.2	4.2.5.3
(1)	(2)	(3a)	(3b)	(4)	(5)	(6)	(7)	(8)	(9a)	(9b)	(10)	(11)
2205	ADIPONITRILE	6.1	T1	III	6.1		LQ19	P001 IBC03 LP01 R001		MP15	T3	TP1
2206	ISOCYANATES, TOXIC, N.O.S. or ISOCYANATE SOLUTION, TOXIC, N.O.S.	6.1	T1	II	6.1	274 551	LQ17	P001 IBC02		MP15	T11	TP2 TP27
2206	ISOCYANATES, TOXIC, N.O.S. or ISOCYANATE SOLUTION, TOXIC, N.O.S.	6.1	T1	III	6.1	274 551	LQ19	P001 IBC03 LP01 R001		MP15	T7	TP1 TP28
2208	CALCIUM HYPOCHLORITE MIXTURE, DRY with more than 10% but not more than 39% available chlorine	5.1	O2	III	5.1	313 314	LQ12	P002 IBC08 LP02 R001	B3, B13	MP10		
2209	FORMALDEHYDE SOLUTION with not less than 25% formaldehyde	8	C9	III	8	533	LQ19	P001 IBC03 LP01 R001		MP15	T4	TP1
2210	MANEB or MANEB PREPARATION with not less than 60% maneb	4.2	SW	III	4.2 +4.3	273	LQ0	P002 IBC06 R001		MP14	T1	TP33
2211	POLYMERIC BEADS, EXPANDABLE, evolving flammable vapour	9	M3	III	None	207 633	LQ27	P002 IBC08 R001	PP14 B3 B6	MP10	T1	TP33
2212	BLUE ASBESTOS (crocidolite) or BROWN ASBESTOS (amosite, mysorite)	9	M1	II	9	168	LQ25	P002 IBC08	PP37 B4	MP10	T3	TP33
2213	PARAFORMALDEHYDE	4.1	F1	III	4.1		LQ9	P002 IBC08 LP02 R001	PP12 B3	MP10	T1 BK1 BK2	TP33
2214	PHTHALIC ANHYDRIDE with more than 0.05% of maleic anhydride	8	C4	III	8	169	LQ24	P002 IBC08 LP02 R001	B3	MP10	T1	TP33
2215	MALEIC ANHYDRIDE, MOLTEN	8	C3	III	8		LQ0				T1	TP33
2215	MALEIC ANHYDRIDE	8	C4	III	8		LQ24	P002 IBC08 R001	B3	MP10	T4	TP1
2216	Fish meal (Fish scrap), stabilized	9	M11	NOT SUBJECT TO ADR								
2217	SEED CAKE with not more than 1.5% oil and not more than 11% moisture	4.2	S2	III	4.2	142	LQ0	P002 IBC08 LP02 R001	PP20 B3 B6	MP14		
2218	ACRYLIC ACID, STABILIZED	8	CF1	II	8 +3		LQ22	P001 IBC02		MP15	T7	TP2
2219	ALLYL GLYCIDYL ETHER	3	F1	III	3		LQ7	P001 IBC03 LP01 R001		MP19	T2	TP1
2222	ANISOLE	3	F1	III	3		LQ7	P001 IBC03 LP01 R001		MP19	T2	TP1
2224	BENZONITRILE	6.1	T1	II	6.1		LQ17	P001 IBC02		MP15	T7	TP2
2225	BENZENESULPHONYL CHLORIDE	8	C3	III	8		LQ19	P001 IBC03 LP01 R001		MP15	T4	TP1
2226	BENZOTRICHLORIDE	8	C9	II	8		LQ22	P001 IBC02		MP15	T7	TP2

ADR tank		Vehicle for tank carriage	Transport category	Special provisions for carriage				Hazard identifi-cation No.	UN No.	Name and description
Tank code	Special provisions			Packages	Bulk	Loading, unloading and handling	Operation			
4.3	4.3.5, 6.8.4	9.1.1.2	1.1.3.6	7.2.4	7.3.3	7.5.11	8.5	5.3.2.3		3.1.2
(12)	(13)	(14)	(15)	(16)	(17)	(18)	(19)	(20)	(1)	(2)
L4BH	TU15 TE15 TE19	AT	2			CV13 CV28	S9	60	2205	ADIPONITRILE
L4BH	TU15 TE15 TE19	AT	2			CV13 CV28	S9 S19	60	2206	ISOCYANATES, TOXIC, N.O.S. or ISOCYANATE SOLUTION, TOXIC, N.O.S.
L4BH	TU15 TE15 TE19	AT	2			CV13 CV28	S9	60	2206	ISOCYANATES, TOXIC, N.O.S. or ISOCYANATE SOLUTION, TOXIC, N.O.S.
SGAN	TU3	AT	3			CV24 CV35		50	2208	CALCIUM HYPOCHLORITE MIXTURE, DRY with more than 10% but not more than 39% available chlorine
L4BN		AT	3					80	2209	FORMALDEHYDE SOLUTION with not less than 25% formaldehyde
SGAN		AT	3	V1 V12	VV4			40	2210	MANEB or MANEB PREPARATION with not less than 60% maneb
SGAN	TE20	AT	3		VV3			90	2211	POLYMERIC BEADS, EXPANDABLE, evolving flammable vapour
SGAH	TU15 TE15	AT	2			CV1 CV13 CV28	S19	90	2212	BLUE ASBESTOS (crocidolite) or BROWN ASBESTOS (amosite, mysorite)
SGAV		AT	3	V13	VV1			40	2213	PARAFORMALDEHYDE
SGAV L4BN		AT	3		VV9b			80	2214	PHTHALIC ANHYDRIDE with more than 0.05% of maleic anhydride
L4BN		AT	0					80	2215	MALEIC ANHYDRIDE, MOLTEN
SGAV		AT	3		VV9b			80	2215	MALEIC ANHYDRIDE
NOT SUBJECT TO ADR									2216	Fish meal (Fish scrap), stabilized
			3	V1	VV4			40	2217	SEED CAKE with not more than 1.5% oil and not more than 11% moisture
L4BN		FL	2				S2	839	2218	ACRYLIC ACID, STABILIZED
LGBF		FL	3				S2	30	2219	ALLYL GLYCIDYL ETHER
LGBF		FL	3				S2	30	2222	ANISOLE
L4BH	TU15 TE15 TE19	AT	2			CV13 CV28	S9 S19	60	2224	BENZONITRILE
L4BN		AT	3					80	2225	BENZENESULPHONYL CHLORIDE
L4BN		AT	2					80	2226	BENZOTRICHLORIDE

UN No.	Name and description	Class	Classification code	Packing group	Labels	Special provisions	Limited quantities	Packaging			Portable tanks and bulk containers	
								Packing instructions	Special packing provisions	Mixed packing provisions	Instructions	Special provisions
	3.1.2	2.2	2.2	2.1.1.3	5.2.2	3.3	3.4.6	4.1.4	4.1.4	4.1.10	4.2.5.2 7.3.2	4.2.5.3
(1)	(2)	(3a)	(3b)	(4)	(5)	(6)	(7)	(8)	(9a)	(9b)	(10)	(11)
2227	n-BUTYL METHACRYLATE, STABILIZED	3	F1	III	3		LQ7	P001 IBC03 LP01 R001		MP19	T2	TP1
2232	2-CHLOROETHANAL	6.1	T1	I	6.1		LQ0	P001		MP8 MP17	T14	TP2
2233	CHLOROANISIDINES	6.1	T2	III	6.1		LQ9	P002 IBC08 LP02 R001	B3	MP10	T1	TP33
2234	CHLOROBENZOTRI-FLUORIDES	3	F1	III	3		LQ7	P001 IBC03 LP01 R001		MP19	T2	TP1
2235	CHLOROBENZYL CHLORIDES, LIQUID	6.1	T1	III	6.1		LQ19	P001 IBC03 LP01 R001		MP15	T4	TP1
2236	3-CHLORO-4-METHYLPHENYL ISOCYANATE, LIQUID	6.1	T1	II	6.1		LQ17	P001 IBC02		MP15		
2237	CHLORONITROANILINES	6.1	T2	III	6.1		LQ9	P002 IBC08 LP02 R001	B3	MP10	T1	TP33
2238	CHLOROTOLUENES	3	F1	III	3		LQ7	P001 IBC03 LP01 R001		MP19	T2	TP1
2239	CHLOROTOLUIDINES, SOLID	6.1	T2	III	6.1		LQ9	P002 IBC08 LP02 R001	B3	MP10	T1	TP33
2240	CHROMOSULPHURIC ACID	8	C1	I	8		LQ0	P001		MP8 MP17	T10	TP2 TP12
2241	CYCLOHEPTANE	3	F1	II	3		LQ4	P001 IBC02 R001		MP19	T4	TP1
2242	CYCLOHEPTENE	3	F1	II	3		LQ4	P001 IBC02 R001		MP19	T4	TP1
2243	CYCLOHEXYL ACETATE	3	F1	III	3		LQ7	P001 IBC03 LP01 R001		MP19	T2	TP1
2244	CYCLOPENTANOL	3	F1	III	3		LQ7	P001 IBC03 LP01 R001		MP19	T2	TP1
2245	CYCLOPENTANONE	3	F1	III	3		LQ7	P001 IBC03 LP01 R001		MP19	T2	TP1
2246	CYCLOPENTENE	3	F1	II	3		LQ4	P001 IBC02	B8	MP19	T7	TP2
2247	n-DECANE	3	F1	III	3		LQ7	P001 IBC03 LP01 R001		MP19	T2	TP1
2248	DI-n-BUTYLAMINE	8	CF1	II	8 +3		LQ22	P001 IBC02		MP15	T7	TP2
2249	DICHLORODIMETHYL ETHER, SYMMETRICAL	6.1	T1	CARRIAGE PROHIBITED								
2250	DICHLOROPHENYL ISOCYANATES	6.1	T2	II	6.1		LQ18	P002 IBC08	B4	MP10	T3	TP33

ADR tank		Vehicle for tank carriage	Transport category	Special provisions for carriage				Hazard identification No.	UN No.	Name and description
Tank code	Special provisions			Packages	Bulk	Loading, unloading and handling	Operation			
4.3	4.3.5, 6.8.4	9.1.1.2	1.1.3.6	7.2.4	7.3.3	7.5.11	8.5	5.3.2.3		3.1.2
(12)	(13)	(14)	(15)	(16)	(17)	(18)	(19)	(20)	(1)	(2)
LGBF		FL	3				S2	39	2227	n-BUTYL METHACRYLATE, STABILIZED
L10CH	TU14 TU15 TE19 TE21	AT	1			CV1 CV13 CV28	S9 S17	66	2232	2-CHLOROETHANAL
SGAH L4BH	TU15 TE15 TE19	AT	2		VV9b	CV13 CV28	S9	60	2233	CHLOROANISIDINES
LGBF		FL	3				S2	30	2234	CHLOROBENZOTRI-FLUORIDES
L4BH	TU15 TE15 TE19	AT	2			CV13 CV28	S9	60	2235	CHLOROBENZYL CHLORIDES, LIQUID
L4BH	TU15 TE15 TE19	AT	2			CV13 CV28	S9 S19	60	2236	3-CHLORO-4-METHYLPHENYL ISOCYANATE, LIQUID
SGAH L4BH	TU15 TE15 TE19	AT	2		VV9b	CV13 CV28	S9	60	2237	CHLORONITROANILINES
LGBF		FL	3				S2	30	2238	CHLOROTOLUENES
SGAH L4BH	TU15 TE15 TE19	AT	2		VV9b	CV13 CV28	S9	60	2239	CHLOROTOLUIDINES, SOLID
L10BH		AT	1				S20	88	2240	CHROMOSULPHURIC ACID
LGBF		FL	2				S2 S20	33	2241	CYCLOHEPTANE
LGBF		FL	2				S2 S20	33	2242	CYCLOHEPTENE
LGBF		FL	3				S2	30	2243	CYCLOHEXYL ACETATE
LGBF		FL	3				S2	30	2244	CYCLOPENTANOL
LGBF		FL	3				S2	30	2245	CYCLOPENTANONE
L1.5BN		FL	2				S2 S20	33	2246	CYCLOPENTENE
LGBF		FL	3				S2	30	2247	n-DECANE
L4BN		FL	2				S2	83	2248	DI-n-BUTYLAMINE
CARRIAGE PROHIBITED									2249	DICHLORODIMETHYL ETHER, SYMMETRICAL
SGAH L4BH	TU15 TE15 TE19	AT	2	V11		CV13 CV28	S9 S19	60	2250	DICHLOROPHENYL ISOCYANATES

UN No.	Name and description	Class	Classification code	Packing group	Labels	Special provisions	Limited quantities	Packaging			Portable tanks and bulk containers	
								Packing instructions	Special packing provisions	Mixed packing provisions	Instructions	Special provisions
	3.1.2	2.2	2.2	2.1.1.3	5.2.2	3.3	3.4.6	4.1.4	4.1.4	4.1.10	4.2.5.2 7.3.2	4.2.5.3
(1)	(2)	(3a)	(3b)	(4)	(5)	(6)	(7)	(8)	(9a)	(9b)	(10)	(11)
2251	BICYCLO[2.2.1]HEPTA-2,5-DIENE, STABILIZED (2,5-NORBORNADIENE, STABILIZED)	3	F1	II	3		LQ4	P001 IBC02 R001		MP19	T7	TP2
2252	1,2-DIMETHOXYETHANE	3	F1	II	3		LQ4	P001 IBC02 R001		MP19	T4	TP1
2253	N,N-DIMETHYLANILINE	6.1	T1	II	6.1		LQ17	P001 IBC02		MP15	T7	TP2
2254	MATCHES, FUSEE	4.1	F1	III	4.1	293	LQ9	P407 R001		MP11		
2256	CYCLOHEXENE	3	F1	II	3		LQ4	P001 IBC02 R001		MP19	T4	TP1
2257	POTASSIUM	4.3	W2	I	4.3		LQ0	P403 IBC04		MP2	T9	TP7 TP33
2258	1,2-PROPYLENEDIAMINE	8	CF1	II	8 +3		LQ22	P001 IBC02		MP15	T7	TP2
2259	TRIETHYLENETETRAMINE	8	C7	II	8		LQ22	P001 IBC02		MP15	T7	TP2
2260	TRIPROPYLAMINE	3	FC	III	3 +8		LQ7	P001 IBC03 R001		MP19	T4	TP1
2261	XYLENOLS, SOLID	6.1	T2	II	6.1		LQ18	P002 IBC08	B4	MP10	T3	TP33
2262	DIMETHYLCARBAMOYL CHLORIDE	8	C3	II	8		LQ22	P001 IBC02		MP15	T7	TP2
2263	DIMETHYLCYCLO-HEXANES	3	F1	II	3		LQ4	P001 IBC02 R001		MP19	T4	TP1
2264	N,N-DIMETHYL-CYCLOHEXYLAMINE	8	CF1	II	8 +3		LQ22	P001 IBC02		MP15	T7	TP2
2265	N,N-DIMETHYL-FORMAMIDE	3	F1	III	3		LQ7	P001 IBC03 LP01 R001		MP19	T2	TP2
2266	DIMETHYL-N-PROPYLAMINE	3	FC	II	3 +8		LQ4	P001 IBC02		MP19	T7	TP2
2267	DIMETHYL THIOPHOSPHORYL CHLORIDE	6.1	TC1	II	6.1 +8		LQ17	P001 IBC02		MP15	T7	TP2
2269	3,3'-IMINODIPROPYLAMINE	8	C7	III	8		LQ19	P001 IBC03 LP01 R001		MP15	T4	TP2
2270	ETHYLAMINE, AQUEOUS SOLUTION with not less than 50% but not more than 70% ethylamine	3	FC	II	3 +8		LQ4	P001 IBC02		MP19	T7	TP1
2271	ETHYL AMYL KETONE	3	F1	III	3		LQ7	P001 IBC03 LP01 R001		MP19	T2	TP1
2272	N-ETHYLANILINE	6.1	T1	III	6.1		LQ19	P001 IBC03 LP01 R001		MP15	T4	TP1
2273	2-ETHYLANILINE	6.1	T1	III	6.1		LQ19	P001 IBC03 LP01 R001		MP15	T4	TP1
2274	N-ETHYL-N-BENZYLANILINE	6.1	T1	III	6.1		LQ19	P001 IBC03 LP01 R001		MP15	T4	TP1

ADR tank		Vehicle for tank carriage	Transport category	Special provisions for carriage				Hazard identification No.	UN No.	Name and description
Tank code	Special provisions			Packages	Bulk	Loading, unloading and handling	Operation			
4.3	4.3.5, 6.8.4	9.1.1.2	1.1.3.6	7.2.4	7.3.3	7.5.11	8.5	5.3.2.3		3.1.2
(12)	(13)	(14)	(15)	(16)	(17)	(18)	(19)	(20)	(1)	(2)
LGBF		FL	2				S2 S20	339	2251	BICYCLO[2.2.1]HEPTA-2,5-DIENE, STABILIZED (2,5-NORBORNADIENE, STABILIZED)
LGBF		FL	2				S2 S20	33	2252	1,2-DIMETHOXYETHANE
L4BH	TU15 TE15 TE19	AT	2			CV13 CV28	S9 S19	60	2253	N,N-DIMETHYLANILINE
			4						2254	MATCHES, FUSEE
LGBF		FL	2				S2 S20	33	2256	CYCLOHEXENE
L10BN(+)	TU1 TE5 TT3 TM2	AT	1	V1		CV23	S20	X423	2257	POTASSIUM
L4BN		FL	2				S2	83	2258	1,2-PROPYLENEDIAMINE
L4BN		AT	2					80	2259	TRIETHYLENETETRAMINE
L4BN		FL	3				S2	38	2260	TRIPROPYLAMINE
SGAH L4BH	TU15 TE15 TE19	AT	2	V11		CV13 CV28	S9 S19	60	2261	XYLENOLS, SOLID
L4BN		AT	2					80	2262	DIMETHYLCARBAMOYL CHLORIDE
LGBF		FL	2				S2 S20	33	2263	DIMETHYLCYCLO-HEXANES
L4BN		FL	2				S2	83	2264	N,N-DIMETHYL-CYCLOHEXYLAMINE
LGBF		FL	3				S2	30	2265	N,N-DIMETHYL-FORMAMIDE
L4BH	TE15	FL	2				S2 S20	338	2266	DIMETHYL-N-PROPYLAMINE
L4BH	TU15 TE15 TE19	AT	2			CV13 CV28	S9 S19	68	2267	DIMETHYL THIOPHOSPHORYL CHLORIDE
L4BN		AT	3					80	2269	3,3'-IMINODIPROPYLAMINE
L4BH	TE15	FL	2				S2 S20	338	2270	ETHYLAMINE, AQUEOUS SOLUTION with not less than 50% but not more than 70% ethylamine
LGBF		FL	3				S2	30	2271	ETHYL AMYL KETONE
L4BH	TU15 TE15 TE19	AT	2			CV13 CV28	S9	60	2272	N-ETHYLANILINE
L4BH	TU15 TE15 TE19	AT	2			CV13 CV28	S9	60	2273	2-ETHYLANILINE
L4BH	TU15 TE15 TE19	AT	2			CV13 CV28	S9	60	2274	N-ETHYL-N-BENZYLANILINE

UN No.	Name and description	Class	Classification code	Packing group	Labels	Special provisions	Limited quantities	Packaging			Portable tanks and bulk containers	
								Packing instructions	Special packing provisions	Mixed packing provisions	Instructions	Special provisions
	3.1.2	2.2	2.2	2.1.1.3	5.2.2	3.3	3.4.6	4.1.4	4.1.4	4.1.10	4.2.5.2 7.3.2	4.2.5.3
(1)	(2)	(3a)	(3b)	(4)	(5)	(6)	(7)	(8)	(9a)	(9b)	(10)	(11)
2275	2-ETHYLBUTANOL	3	F1	III	3		LQ7	P001 IBC03 LP01 R001		MP19	T2	TP1
2276	2-ETHYLHEXYLAMINE	3	FC	III	3 +8		LQ7	P001 IBC03 R001		MP19	T4	TP1
2277	ETHYL METHACRYLATE, STABILIZED	3	F1	II	3		LQ4	P001 IBC02 R001		MP19	T4	TP1
2278	n-HEPTENE	3	F1	II	3		LQ4	P001 IBC02 R001		MP19	T4	TP1
2279	HEXACHLOROBUTADIENE	6.1	T1	III	6.1		LQ19	P001 IBC03 LP01 R001		MP15	T4	TP1
2280	HEXAMETHYLENE-DIAMINE, SOLID	8	C8	III	8		LQ24	P002 IBC08 LP02 R001	B3	MP10	T1	TP33
2281	HEXAMETHYLENE DIISOCYANATE	6.1	T1	II	6.1		LQ17	P001 IBC02		MP15	T7	TP2
2282	HEXANOLS	3	F1	III	3		LQ7	P001 IBC03 LP01 R001		MP19	T2	TP1
2283	ISOBUTYL METHACRYLATE, STABILIZED	3	F1	III	3		LQ7	P001 IBC03 LP01 R001		MP19	T2	TP1
2284	ISOBUTYRONITRILE	3	FT1	II	3 +6.1		LQ0	P001 IBC02		MP19	T7	TP2
2285	ISOCYANATOBENZO-TRIFLUORIDES	6.1	TF1	II	6.1 +3		LQ17	P001 IBC02		MP15	T7	TP2
2286	PENTAMETHYLHEPTANE	3	F1	III	3		LQ7	P001 IBC03 LP01 R001		MP19	T2	TP1
2287	ISOHEPTENE	3	F1	II	3		LQ4	P001 IBC02 R001		MP19	T4	TP1
2288	ISOHEXENE	3	F1	II	3		LQ4	P001 IBC02 R001	B8	MP19	T11	TP1
2289	ISOPHORONEDIAMINE	8	C7	III	8		LQ19	P001 IBC03 LP01 R001		MP15	T4	TP1
2290	ISOPHORONE DIISOCYANATE	6.1	T1	III	6.1		LQ19	P001 IBC03 LP01 R001		MP15	T4	TP2
2291	LEAD COMPOUND, SOLUBLE, N.O.S.	6.1	T5	III	6.1	199 274 535	LQ9	P002 IBC08 LP02 R001	B3	MP10	T1	TP33
2293	4-METHOXY-4-METHYLPENTAN-2-ONE	3	F1	III	3		LQ7	P001 IBC03 LP01 R001		MP19	T2	TP1
2294	N-METHYLANILINE	6.1	T1	III	6.1		LQ19	P001 IBC03 LP01 R001		MP15	T4	TP1

ADR tank		Vehicle for tank carriage	Transport category	Special provisions for carriage				Hazard identifi-cation No.	UN No.	Name and description
Tank code	Special provisions			Packages	Bulk	Loading, unloading and handling	Operation			
4.3	4.3.5, 6.8.4	9.1.1.2	1.1.3.6	7.2.4	7.3.3	7.5.11	8.5	5.3.2.3		3.1.2
(12)	(13)	(14)	(15)	(16)	(17)	(18)	(19)	(20)	(1)	(2)
LGBF		FL	3				S2	30	2275	2-ETHYLBUTANOL
L4BN		FL	3				S2	38	2276	2-ETHYLHEXYLAMINE
LGBF		FL	2				S2 S20	339	2277	ETHYL METHACRYLATE, STABILIZED
LGBF		FL	2				S2 S20	33	2278	n-HEPTENE
L4BH	TU15 TE15 TE19	AT	2			CV13 CV28	S9	60	2279	HEXACHLOROBUTADIENE
SGAV L4BN		AT	3		VV9b			80	2280	HEXAMETHYLENE-DIAMINE, SOLID
L4BH	TU15 TE15 TE19	AT	2			CV13 CV28	S9 S19	60	2281	HEXAMETHYLENE DIISOCYANATE
LGBF		FL	3				S2	30	2282	HEXANOLS
LGBF		FL	3				S2	39	2283	ISOBUTYL METHACRYLATE, STABILIZED
L4BH	TU15 TE15	FL	2			CV13 CV28	S2 S19	336	2284	ISOBUTYRONITRILE
L4BH	TU15 TE15 TE19	FL	2			CV13 CV28	S2 S9 S19	63	2285	ISOCYANATOBENZO-TRIFLUORIDES
LGBF		FL	3				S2	30	2286	PENTAMETHYLHEPTANE
LGBF		FL	2				S2 S20	33	2287	ISOHEPTENE
LGBF		FL	2				S2 S20	33	2288	ISOHEXENE
L4BN		AT	3					80	2289	ISOPHORONEDIAMINE
L4BH	TU15 TE15 TE19	AT	2			CV13 CV28	S9	60	2290	ISOPHORONE DIISOCYANATE
SGAH L4BH	TU15 TE15 TE19	AT	2		VV9b	CV13 CV28	S9	60	2291	LEAD COMPOUND, SOLUBLE, N.O.S.
LGBF		FL	3				S2	30	2293	4-METHOXY-4-METHYLPENTAN-2-ONE
L4BH	TU15 TE15 TE19	AT	2			CV13 CV28	S9	60	2294	N-METHYLANILINE

UN No.	Name and description	Class	Classification code	Packing group	Labels	Special provisions	Limited quantities	Packaging			Portable tanks and bulk containers	
								Packing instructions	Special packing provisions	Mixed packing provisions	Instructions	Special provisions
	3.1.2	2.2	2.2	2.1.1.3	5.2.2	3.3	3.4.6	4.1.4	4.1.4	4.1.10	4.2.5.2 7.3.2	4.2.5.3
(1)	(2)	(3a)	(3b)	(4)	(5)	(6)	(7)	(8)	(9a)	(9b)	(10)	(11)
2295	METHYL CHLOROACETATE	6.1	TF1	I	6.1 +3		LQ0	P001		MP8 MP17	T14	TP2
2296	METHYLCYCLOHEXANE	3	F1	II	3		LQ4	P001 IBC02 R001		MP19	T4	TP1
2297	METHYLCYCLO-HEXANONE	3	F1	III	3		LQ7	P001 IBC03 LP01 R001		MP19	T2	TP1
2298	METHYLCYCLOPENTANE	3	F1	II	3		LQ4	P001 IBC02 R001		MP19	T4	TP1
2299	METHYL DICHLOROACETATE	6.1	T1	III	6.1		LQ19	P001 IBC03 LP01 R001		MP15	T4	TP1
2300	2-METHYL-5-ETHYLPYRIDINE	6.1	T1	III	6.1		LQ19	P001 IBC03 LP01 R001		MP15	T4	TP1
2301	2-METHYLFURAN	3	F1	II	3		LQ4	P001 IBC02 R001		MP19	T4	TP1
2302	5-METHYLHEXAN-2-ONE	3	F1	III	3		LQ7	P001 IBC03 LP01 R001		MP19	T2	TP1
2303	ISOPROPENYLBENZENE	3	F1	III	3		LQ7	P001 IBC03 LP01 R001		MP19	T2	TP1
2304	NAPHTHALENE, MOLTEN	4.1	F2	III	4.1	536	LQ0				T1	TP3
2305	NITROBENZENE-SULPHONIC ACID	8	C4	II	8		LQ23	P002 IBC08	B4	MP10	T3	TP33
2306	NITROBENZOTRI-FLUORIDES, LIQUID	6.1	T1	II	6.1		LQ17	P001 IBC02		MP15	T7	TP2
2307	3-NITRO-4-CHLORO-BENZOTRIFLUORIDE	6.1	T1	II	6.1		LQ17	P001 IBC02		MP10	T7	TP2
2308	NITROSYLSULPHURIC ACID, LIQUID	8	C1	II	8		LQ22	P001 IBC02		MP15	T8	TP2 TP12
2309	OCTADIENES	3	F1	II	3		LQ4	P001 IBC02 R001		MP19	T4	TP1
2310	PENTANE-2,4-DIONE	3	FT1	III	3 +6.1		LQ7	P001 IBC03 R001		MP19	T4	TP1
2311	PHENETIDINES	6.1	T1	III	6.1	279	LQ19	P001 IBC03 LP01 R001		MP15	T4	TP1
2312	PHENOL, MOLTEN	6.1	T1	II	6.1		LQ0				T7	TP3
2313	PICOLINES	3	F1	III	3		LQ7	P001 IBC03 LP01 R001		MP19	T4	TP1
2315	POLYCHLORINATED BIPHENYLS, LIQUID	9	M2	II	9	305	LQ26	P906 IBC02		MP15	T4	TP1
2316	SODIUM CUPROCYANIDE, SOLID	6.1	T5	I	6.1		LQ0	P002 IBC07		MP18	T6	TP33
2317	SODIUM CUPROCYANIDE SOLUTION	6.1	T4	I	6.1		LQ0	P001		MP8 MP17	T14	TP2

ADR tank		Vehicle for tank carriage	Transport category	Special provisions for carriage				Hazard identifi-cation No.	UN No.	Name and description
Tank code	Special provisions			Packages	Bulk	Loading, unloading and handling	Operation			
4.3	4.3.5, 6.8.4	9.1.1.2	1.1.3.6	7.2.4	7.3.3	7.5.11	8.5	5.3.2.3		3.1.2
(12)	(13)	(14)	(15)	(16)	(17)	(18)	(19)	(20)	(1)	(2)
L10CH	TU14 TU15 TE19 TE21	FL	1			CV1 CV13 CV28	S2 S9 S17	663	2295	METHYL CHLOROACETATE
LGBF		FL	2				S2 S20	33	2296	METHYLCYCLOHEXANE
LGBF		FL	3				S2	30	2297	METHYLCYCLO-HEXANONE
LGBF		FL	2				S2 S20	33	2298	METHYLCYCLOPENTANE
L4BH	TU15 TE15 TE19	AT	2			CV13 CV28	S9	60	2299	METHYL DICHLOROACETATE
L4BH	TU15 TE15 TE19	AT	2			CV13 CV28	S9	60	2300	2-METHYL-5-ETHYLPYRIDINE
LGBF		FL	2				S2 S20	33	2301	2-METHYLFURAN
LGBF		FL	3				S2	30	2302	5-METHYLHEXAN-2-ONE
LGBF		FL	3				S2	30	2303	ISOPROPENYLBENZENE
LGBV	TU27 TE4 TE6	AT	3					44	2304	NAPHTHALENE, MOLTEN
L4BN SGAN		AT	2	V11				80	2305	NITROBENZENE-SULPHONIC ACID
L4BH	TU15 TE15 TE19	AT	2			CV13 CV28	S9 S19	60	2306	NITROBENZOTRI-FLUORIDES, LIQUID
L4BH	TU15 TE15 TE19	AT	2			CV13 CV28	S9 S19	60	2307	3-NITRO-4-CHLORO-BENZOTRIFLUORIDE
L4BN		AT	2					X80	2308	NITROSYLSULPHURIC ACID, LIQUID
LGBF		FL	2				S2 S20	33	2309	OCTADIENES
L4BH	TU15 TE15	FL	3			CV13 CV28	S2	36	2310	PENTANE-2,4-DIONE
L4BH	TU15 TE15 TE19	AT	2			CV13 CV28	S9	60	2311	PHENETIDINES
L4BH	TU15 TE15 TE19	AT	0			CV13	S9 S19	60	2312	PHENOL, MOLTEN
LGBF		FL	3				S2	30	2313	PICOLINES
L4BH	TU15 TE15	AT	0			CV1 CV13 CV28	S19	90	2315	POLYCHLORINATED BIPHENYLS, LIQUID
S10AH	TU15 TE19	AT	1	V10 V12		CV1 CV13 CV28	S9 S17	66	2316	SODIUM CUPROCYANIDE, SOLID
L10CH	TU14 TU15 TE19 TE21	AT	1			CV1 CV13 CV28	S9 S17	66	2317	SODIUM CUPROCYANIDE SOLUTION

UN No.	Name and description	Class	Classification code	Packing group	Labels	Special provisions	Limited quantities	Packaging			Portable tanks and bulk containers	
								Packing instructions	Special packing provisions	Mixed packing provisions	Instructions	Special provisions
	3.1.2	2.2	2.2	2.1.1.3	5.2.2	3.3	3.4.6	4.1.4	4.1.4	4.1.10	4.2.5.2 7.3.2	4.2.5.3
(1)	(2)	(3a)	(3b)	(4)	(5)	(6)	(7)	(8)	(9a)	(9b)	(10)	(11)
2318	SODIUM HYDROSULPHIDE with less than 25% water of crystallization	4.2	S4	II	4.2	504	LQ0	P410 IBC06		MP14	T3	TP33
2319	TERPENE HYDROCARBONS, N.O.S.	3	F1	III	3		LQ7	P001 IBC03 LP01 R001		MP19	T4	TP1 TP29
2320	TETRAETHYLENE-PENTAMINE	8	C7	III	8		LQ19	P001 IBC03 LP01 R001		MP15	T4	TP1
2321	TRICHLOROBENZENES, LIQUID	6.1	T1	III	6.1		LQ19	P001 IBC03 LP01 R001		MP15	T4	TP1
2322	TRICHLOROBUTENE	6.1	T1	II	6.1		LQ17	P001 IBC02		MP15	T7	TP2
2323	TRIETHYL PHOSPHITE	3	F1	III	3		LQ7	P001 IBC03 LP01 R001		MP19	T2	TP1
2324	TRIISOBUTYLENE	3	F1	III	3		LQ7	P001 IBC03 LP01 R001		MP19	T4	TP1
2325	1,3,5-TRIMETHYLBENZENE	3	F1	III	3		LQ7	P001 IBC03 LP01 R001		MP19	T2	TP1
2326	TRIMETHYLCYCLO-HEXYLAMINE	8	C7	III	8		LQ19	P001 IBC03 LP01 R001		MP15	T4	TP1
2327	TRIMETHYLHEXA-METHYLENEDIAMINES	8	C7	III	8		LQ19	P001 IBC03 LP01 R001		MP15	T4	TP1
2328	TRIMETHYLHEXA-METHYLENE DIISOCYANATE	6.1	T1	III	6.1		LQ19	P001 IBC03 LP01 R001		MP15	T4	TP2
2329	TRIMETHYL PHOSPHITE	3	F1	III	3		LQ7	P001 IBC03 LP01 R001		MP19	T2	TP1
2330	UNDECANE	3	F1	III	3		LQ7	P001 IBC03 LP01 R001		MP19	T2	TP1
2331	ZINC CHLORIDE, ANHYDROUS	8	C2	III	8		LQ24	P002 IBC08 LP02 R001	B3	MP10	T1	TP33
2332	ACETALDEHYDE OXIME	3	F1	III	3		LQ7	P001 IBC03 LP01 R001		MP19	T4	TP1
2333	ALLYL ACETATE	3	FT1	II	3 +6.1		LQ0	P001 IBC02		MP19	T7	TP1
2334	ALLYLAMINE	6.1	TF1	I	6.1 +3		LQ0	P602		MP8 MP17	T14	TP2
2335	ALLYL ETHYL ETHER	3	FT1	II	3 +6.1		LQ0	P001 IBC02		MP19	T7	TP1
2336	ALLYL FORMATE	3	FT1	I	3 +6.1		LQ0	P001		MP7 MP17	T14	TP2

ADR tank		Vehicle for tank carriage	Transport category	Special provisions for carriage				Hazard identifi-cation No.	UN No.	Name and description
Tank code	Special provisions			Packages	Bulk	Loading, unloading and handling	Operation			
4.3	4.3.5, 6.8.4	9.1.1.2	1.1.3.6	7.2.4	7.3.3	7.5.11	8.5	5.3.2.3		3.1.2
(12)	(13)	(14)	(15)	(16)	(17)	(18)	(19)	(20)	(1)	(2)
SGAN		AT	2	V1 V12				40	2318	SODIUM HYDROSULPHIDE with less than 25% water of crystallization
LGBF		FL	3				S2	30	2319	TERPENE HYDROCARBONS, N.O.S.
L4BN		AT	3					80	2320	TETRAETHYLENE-PENTAMINE
L4BH	TU15 TE15 TE19	AT	2			CV13 CV28	S9	60	2321	TRICHLOROBENZENES, LIQUID
L4BH	TU15 TE15 TE19	AT	2			CV13 CV28	S9 S19	60	2322	TRICHLOROBUTENE
LGBF		FL	3				S2	30	2323	TRIETHYL PHOSPHITE
LGBF		FL	3				S2	30	2324	TRIISOBUTYLENE
LGBF		FL	3				S2	30	2325	1,3,5-TRIMETHYLBENZENE
L4BN		AT	3					80	2326	TRIMETHYLCYCLO-HEXYLAMINE
L4BN		AT	3					80	2327	TRIMETHYLHEXA-METHYLENEDIAMINES
L4BH	TU15 TE15 TE19	AT	2			CV13 CV28	S9	60	2328	TRIMETHYLHEXA-METHYLENE DIISOCYANATE
LGBF		FL	3				S2	30	2329	TRIMETHYL PHOSPHITE
LGBF		FL	3				S2	30	2330	UNDECANE
SGAV		AT	3		VV9b			80	2331	ZINC CHLORIDE, ANHYDROUS
LGBF		FL	3				S2	30	2332	ACETALDEHYDE OXIME
L4BH	TU15 TE15	FL	2			CV13 CV28	S2 S19	336	2333	ALLYL ACETATE
L10CH	TU14 TU15 TE19 TE21	FL	1			CV1 CV13 CV28	S2 S9 S17	663	2334	ALLYLAMINE
L4BH	TU15 TE15	FL	2			CV13 CV28	S2 S19	336	2335	ALLYL ETHYL ETHER
L10CH	TU14 TU15 TE21	FL	1			CV13 CV28	S2 S19	336	2336	ALLYL FORMATE

UN No.	Name and description	Class	Classification code	Packing group	Labels	Special provisions	Limited quantities	Packaging			Portable tanks and bulk containers	
								Packing instructions	Special packing provisions	Mixed packing provisions	Instructions	Special provisions
	3.1.2	2.2	2.2	2.1.1.3	5.2.2	3.3	3.4.6	4.1.4	4.1.4	4.1.10	4.2.5.2 7.3.2	4.2.5.3
(1)	(2)	(3a)	(3b)	(4)	(5)	(6)	(7)	(8)	(9a)	(9b)	(10)	(11)
2337	PHENYL MERCAPTAN	6.1	TF1	I	6.1 +3		LQ0	P001		MP8 MP17	T14	TP2
2338	BENZOTRIFLUORIDE	3	F1	II	3		LQ4	P001 IBC02 R001		MP19	T4	TP1
2339	2-BROMOBUTANE	3	F1	II	3		LQ4	P001 IBC02 R001		MP19	T4	TP1
2340	2-BROMOETHYL ETHYL ETHER	3	F1	II	3		LQ4	P001 IBC02 R001		MP19	T4	TP1
2341	1-BROMO-3-METHYLBUTANE	3	F1	III	3		LQ7	P001 IBC03 LP01 R001		MP19	T2	TP1
2342	BROMOMETHYL-PROPANES	3	F1	II	3		LQ4	P001 IBC02 R001		MP19	T4	TP1
2343	2-BROMOPENTANE	3	F1	II	3		LQ4	P001 IBC02 R001		MP19	T4	TP1
2344	BROMOPROPANES	3	F1	II	3		LQ4	P001 IBC02 R001		MP19	T4	TP1
2344	BROMOPROPANES	3	F1	III	3		LQ7	P001 IBC03 LP01 R001		MP19	T2	TP1
2345	3-BROMOPROPYNE	3	F1	II	3		LQ4	P001 IBC02 R001		MP19	T4	TP1
2346	BUTANEDIONE	3	F1	II	3		LQ4	P001 IBC02 R001		MP19	T4	TP1
2347	BUTYL MERCAPTAN	3	F1	II	3		LQ4	P001 IBC02 R001		MP19	T4	TP1
2348	BUTYL ACRYLATES, STABILIZED	3	F1	III	3		LQ7	P001 IBC03 LP01 R001		MP19	T2	TP1
2350	BUTYL METHYL ETHER	3	F1	II	3		LQ4	P001 IBC02 R001		MP19	T4	TP1
2351	BUTYL NITRITES	3	F1	II	3		LQ4	P001 IBC02 R001		MP19	T4	TP1
2351	BUTYL NITRITES	3	F1	III	3		LQ7	P001 IBC03 LP01 R001		MP19	T2	TP1
2352	BUTYL VINYL ETHER, STABILIZED	3	F1	II	3		LQ4	P001 IBC02 R001		MP19	T4	TP1
2353	BUTYRYL CHLORIDE	3	FC	II	3 +8		LQ4	P001 IBC02		MP19	T8	TP2 TP12
2354	CHLOROMETHYL ETHYL ETHER	3	FT1	II	3 +6.1		LQ0	P001 IBC02		MP19	T7	TP1
2356	2-CHLOROPROPANE	3	F1	I	3		LQ3	P001		MP7 MP17	T11	TP2
2357	CYCLOHEXYLAMINE	8	CF1	II	8 +3		LQ22	P001 IBC02		MP15	T7	TP2
2358	CYCLOOCTATETRAENE	3	F1	II	3		LQ4	P001 IBC02 R001		MP19	T4	TP1

ADR tank		Vehicle for tank carriage	Transport category	Special provisions for carriage				Hazard identifi-cation No.	UN No.	Name and description
Tank code	Special provisions			Packages	Bulk	Loading, unloading and handling	Operation			
4.3	4.3.5, 6.8.4	9.1.1.2	1.1.3.6	7.2.4	7.3.3	7.5.11	8.5	5.3.2.3		3.1.2
(12)	(13)	(14)	(15)	(16)	(17)	(18)	(19)	(20)	(1)	(2)
L10CH	TU14 TU15 TE19 TE21	FL	1			CV1 CV13 CV28	S2 S9 S17	663	2337	PHENYL MERCAPTAN
LGBF		FL	2				S2 S20	33	2338	BENZOTRIFLUORIDE
LGBF		FL	2				S2 S20	33	2339	2-BROMOBUTANE
LGBF		FL	2				S2 S20	33	2340	2-BROMOETHYL ETHYL ETHER
LGBF		FL	3				S2	30	2341	1-BROMO-3-METHYLBUTANE
LGBF		FL	2				S2 S20	33	2342	BROMOMETHYL-PROPANES
LGBF		FL	2				S2 S20	33	2343	2-BROMOPENTANE
LGBF		FL	2				S2 S20	33	2344	BROMOPROPANES
LGBF		FL	3				S2	30	2344	BROMOPROPANES
LGBF		FL	2				S2 S20	33	2345	3-BROMOPROPYNE
LGBF		FL	2				S2 S20	33	2346	BUTANEDIONE
LGBF		FL	2				S2 S20	33	2347	BUTYL MERCAPTAN
LGBF		FL	3				S2	39	2348	BUTYL ACRYLATES, STABILIZED
LGBF		FL	2				S2 S20	33	2350	BUTYL METHYL ETHER
LGBF		FL	2				S2 S20	33	2351	BUTYL NITRITES
LGBF		FL	3				S2	30	2351	BUTYL NITRITES
LGBF		FL	2				S2 S20	339	2352	BUTYL VINYL ETHER, STABILIZED
L4BH	TE15	FL	2				S2 S20	338	2353	BUTYRYL CHLORIDE
L4BH	TU15 TE15	FL	2			CV13 CV28	S2 S19	336	2354	CHLOROMETHYL ETHYL ETHER
L1.5BN		FL	1				S2 S20	33	2356	2-CHLOROPROPANE
L4BN		FL	2				S2	83	2357	CYCLOHEXYLAMINE
LGBF		FL	2				S2 S20	33	2358	CYCLOOCTATETRAENE

UN No.	Name and description	Class	Classification code	Packing group	Labels	Special provisions	Limited quantities	Packaging			Portable tanks and bulk containers	
								Packing instructions	Special packing provisions	Mixed packing provisions	Instructions	Special provisions
	3.1.2	2.2	2.2	2.1.1.3	5.2.2	3.3	3.4.6	4.1.4	4.1.4	4.1.10	4.2.5.2 7.3.2	4.2.5.3
(1)	(2)	(3a)	(3b)	(4)	(5)	(6)	(7)	(8)	(9a)	(9b)	(10)	(11)
2359	DIALLYLAMINE	3	FTC	II	3 +6.1 +8		LQ0	P001 IBC02		MP19	T7	TP1
2360	DIALLYL ETHER	3	FT1	II	3 +6.1		LQ0	P001 IBC02		MP19	T7	TP1
2361	DIISOBUTYLAMINE	3	FC	III	3 +8		LQ7	P001 IBC03 R001		MP19	T4	TP1
2362	1,1-DICHLOROETHANE	3	F1	II	3		LQ4	P001 IBC02 R001		MP19	T4	TP1
2363	ETHYL MERCAPTAN	3	F1	I	3		LQ3	P001		MP7 MP17	T11	TP2
2364	n-PROPYLBENZENE	3	F1	III	3		LQ7	P001 IBC03 LP01 R001		MP19	T2	TP1
2366	DIETHYL CARBONATE	3	F1	III	3		LQ7	P001 IBC03 LP01 R001		MP19	T2	TP1
2367	alpha-METHYL-VALERALDEHYDE	3	F1	II	3		LQ4	P001 IBC02 R001		MP19	T4	TP1
2368	alpha-PINENE	3	F1	III	3		LQ7	P001 IBC03 LP01 R001		MP19	T2	TP1
2370	1-HEXENE	3	F1	II	3		LQ4	P001 IBC02 R001		MP19	T4	TP1
2371	ISOPENTENES	3	F1	I	3		LQ3	P001		MP7 MP17	T11	TP2
2372	1,2-DI-(DIMETHYLAMINO) ETHANE	3	F1	II	3		LQ4	P001 IBC02 R001		MP19	T4	TP1
2373	DIETHOXYMETHANE	3	F1	II	3		LQ4	P001 IBC02 R001		MP19	T4	TP1
2374	3,3-DIETHOXYPROPENE	3	F1	II	3		LQ4	P001 IBC02 R001		MP19	T4	TP1
2375	DIETHYL SULPHIDE	3	F1	II	3		LQ4	P001 IBC02 R001		MP19	T7	TP1
2376	2,3-DIHYDROPYRAN	3	F1	II	3		LQ4	P001 IBC02 R001		MP19	T4	TP1
2377	1,1-DIMETHOXYETHANE	3	F1	II	3		LQ4	P001 IBC02 R001		MP19	T7	TP1
2378	2-DIMETHYLAMINO-ACETONITRILE	3	FT1	II	3 +6.1		LQ0	P001 IBC02		MP19	T7	TP1
2379	1,3-DIMETHYLBUTYL-AMINE	3	FC	II	3 +8		LQ4	P001 IBC02		MP19	T7	TP1
2380	DIMETHYLDIETHOXY-SILANE	3	F1	II	3		LQ4	P001 IBC02 R001		MP19	T4	TP1
2381	DIMETHYL DISULPHIDE	3	F1	II	3		LQ4	P001 IBC02 R001		MP19	T4	TP1
2382	DIMETHYLHYDRAZINE, SYMMETRICAL	6.1	TF1	I	6.1 +3		LQ0	P001		MP8 MP17	T14	TP2
2383	DIPROPYLAMINE	3	FC	II	3 +8		LQ4	P001 IBC02		MP19	T7	TP1

ADR tank		Vehicle for tank carriage	Transport category	Special provisions for carriage				Hazard identifi-cation No.	UN No.	Name and description
Tank code	Special provisions			Packages	Bulk	Loading, unloading and handling	Operation			
4.3	4.3.5, 6.8.4	9.1.1.2	1.1.3.6	7.2.4	7.3.3	7.5.11	8.5	5.3.2.3		3.1.2
(12)	(13)	(14)	(15)	(16)	(17)	(18)	(19)	(20)	(1)	(2)
L4BH	TU15 TE15	FL	2			CV13 CV28	S2 S19	338	2359	DIALLYLAMINE
L4BH	TU15 TE15	FL	2			CV13 CV28	S2 S19	336	2360	DIALLYL ETHER
L4BN		FL	3				S2	38	2361	DIISOBUTYLAMINE
LGBF		FL	2				S2 S20	33	2362	1,1-DICHLOROETHANE
L1.5BN		FL	1				S2 S20	33	2363	ETHYL MERCAPTAN
LGBF		FL	3				S2	30	2364	n-PROPYLBENZENE
LGBF		FL	3				S2	30	2366	DIETHYL CARBONATE
LGBF		FL	2				S2 S20	33	2367	alpha-METHYL-VALERALDEHYDE
LGBF		FL	3				S2	30	2368	alpha-PINENE
LGBF		FL	2				S2 S20	33	2370	1-HEXENE
L4BN		FL	1				S2 S20	33	2371	ISOPENTENES
LGBF		FL	2				S2 S20	33	2372	1,2-DI-(DIMETHYLAMINO) ETHANE
LGBF		FL	2				S2 S20	33	2373	DIETHOXYMETHANE
LGBF		FL	2				S2 S20	33	2374	3,3-DIETHOXYPROPENE
LGBF		FL	2				S2 S20	33	2375	DIETHYL SULPHIDE
LGBF		FL	2				S2 S20	33	2376	2,3-DIHYDROPYRAN
LGBF		FL	2				S2 S20	33	2377	1,1-DIMETHOXYETHANE
L4BH	TU15 TE15	FL	2			CV13 CV28	S2 S19	336	2378	2-DIMETHYLAMINO-ACETONITRILE
L4BH	TE15	FL	2				S2 S20	338	2379	1,3-DIMETHYLBUTYL-AMINE
LGBF		FL	2				S2 S20	33	2380	DIMETHYLDIETHOXY-SILANE
LGBF		FL	2				S2 S20	33	2381	DIMETHYL DISULPHIDE
L10CH	TU14 TU15 TE19 TE21	FL	1			CV1 CV13 CV28	S2 S9 S17	663	2382	DIMETHYLHYDRAZINE, SYMMETRICAL
L4BH	TE15	FL	2				S2 S20	338	2383	DIPROPYLAMINE

UN No.	Name and description	Class	Classification code	Packing group	Labels	Special provisions	Limited quantities	Packaging			Portable tanks and bulk containers	
								Packing instructions	Special packing provisions	Mixed packing provisions	Instructions	Special provisions
	3.1.2	2.2	2.2	2.1.1.3	5.2.2	3.3	3.4.6	4.1.4	4.1.4	4.1.10	4.2.5.2 7.3.2	4.2.5.3
(1)	(2)	(3a)	(3b)	(4)	(5)	(6)	(7)	(8)	(9a)	(9b)	(10)	(11)
2384	DI-n-PROPYL ETHER	3	F1	II	3		LQ4	P001 IBC02 R001		MP19	T4	TP1
2385	ETHYL ISOBUTYRATE	3	F1	II	3		LQ4	P001 IBC02 R001		MP19	T4	TP1
2386	1-ETHYLPIPERIDINE	3	FC	II	3 +8		LQ4	P001 IBC02		MP19	T7	TP1
2387	FLUOROBENZENE	3	F1	II	3		LQ4	P001 IBC02 R001		MP19	T4	TP1
2388	FLUOROTOLUENES	3	F1	II	3		LQ4	P001 IBC02 R001		MP19	T4	TP1
2389	FURAN	3	F1	I	3		LQ3	P001		MP7 MP17	T12	TP2
2390	2-IODOBUTANE	3	F1	II	3		LQ4	P001 IBC02 R001		MP19	T4	TP1
2391	IODOMETHYLPROPANES	3	F1	II	3		LQ4	P001 IBC02 R001		MP19	T4	TP1
2392	IODOPROPANES	3	F1	III	3		LQ7	P001 IBC03 LP01 R001		MP19	T2	TP1
2393	ISOBUTYL FORMATE	3	F1	II	3		LQ4	P001 IBC02 R001		MP19	T4	TP1
2394	ISOBUTYL PROPIONATE	3	F1	III	3		LQ7	P001 IBC03 LP01 R001		MP19	T2	TP1
2395	ISOBUTYRYL CHLORIDE	3	FC	II	3 +8		LQ4	P001 IBC02		MP19	T7	TP2
2396	METHACRYLALDEHYDE, STABILIZED	3	FT1	II	3 +6.1		LQ0	P001 IBC02		MP19	T7	TP1
2397	3-METHYLBUTAN-2-ONE	3	F1	II	3		LQ4	P001 IBC02 R001		MP19	T4	TP1
2398	METHYL tert-BUTYL ETHER	3	F1	II	3		LQ4	P001 IBC02 R001		MP19	T7	TP1
2399	1-METHYLPIPERIDINE	3	FC	II	3 +8		LQ4	P001 IBC02		MP19	T7	TP1
2400	METHYL ISOVALERATE	3	F1	II	3		LQ4	P001 IBC02 R001		MP19	T4	TP1
2401	PIPERIDINE	8	CF1	I	8 +3		LQ0	P001		MP8 MP17	T10	TP2
2402	PROPANETHIOLS	3	F1	II	3		LQ4	P001 IBC02 R001		MP19	T4	TP1
2403	ISOPROPENYL ACETATE	3	F1	II	3		LQ4	P001 IBC02 R001		MP19	T4	TP1
2404	PROPIONITRILE	3	FT1	II	3 +6.1		LQ0	P001 IBC02		MP19	T7	TP1
2405	ISOPROPYL BUTYRATE	3	F1	III	3		LQ7	P001 IBC03 LP01 R001		MP19	T2	TP1
2406	ISOPROPYL ISOBUTYRATE	3	F1	II	3		LQ4	P001 IBC02 R001		MP19	T4	TP1

ADR tank		Vehicle for tank carriage	Transport category	Special provisions for carriage				Hazard identifi-cation No.	UN No.	Name and description
Tank code	Special provisions			Packages	Bulk	Loading, unloading and handling	Operation			
4.3	4.3.5, 6.8.4	9.1.1.2	1.1.3.6	7.2.4	7.3.3	7.5.11	8.5	5.3.2.3		3.1.2
(12)	(13)	(14)	(15)	(16)	(17)	(18)	(19)	(20)	(1)	(2)
LGBF		FL	2				S2 S20	33	2384	DI-n-PROPYL ETHER
LGBF		FL	2				S2 S20	33	2385	ETHYL ISOBUTYRATE
L4BH	TE15	FL	2				S2 S20	338	2386	1-ETHYLPIPERIDINE
LGBF		FL	2				S2 S20	33	2387	FLUOROBENZENE
LGBF		FL	2				S2 S20	33	2388	FLUOROTOLUENES
L4BN		FL	1				S2 S20	33	2389	FURAN
LGBF		FL	2				S2 S20	33	2390	2-IODOBUTANE
LGBF		FL	2				S2 S20	33	2391	IODOMETHYLPROPANES
LGBF		FL	3				S2	30	2392	IODOPROPANES
LGBF		FL	2				S2 S20	33	2393	ISOBUTYL FORMATE
LGBF		FL	3				S2	30	2394	ISOBUTYL PROPIONATE
L4BH	TE15	FL	2				S2 S20	338	2395	ISOBUTYRYL CHLORIDE
L4BH	TU15 TE15	FL	2			CV13 CV28	S2 S19	336	2396	METHACRYLALDEHYDE, STABILIZED
LGBF		FL	2				S2 S20	33	2397	3-METHYLBUTAN-2-ONE
LGBF		FL	2				S2 S20	33	2398	METHYL tert-BUTYL ETHER
L4BH	TE15	FL	2				S2 S20	338	2399	1-METHYLPIPERIDINE
LGBF		FL	2				S2 S20	33	2400	METHYL ISOVALERATE
L10BH		FL	1				S2 S20	883	2401	PIPERIDINE
LGBF		FL	2				S2 S20	33	2402	PROPANETHIOLS
LGBF		FL	2				S2 S20	33	2403	ISOPROPENYL ACETATE
L4BH	TU15 TE15	FL	2			CV13 CV28	S2 S19	336	2404	PROPIONITRILE
LGBF		FL	3				S2	30	2405	ISOPROPYL BUTYRATE
LGBF		FL	2				S2 S20	33	2406	ISOPROPYL ISOBUTYRATE

UN No.	Name and description	Class	Classification code	Packing group	Labels	Special provisions	Limited quantities	Packaging			Portable tanks and bulk containers	
								Packing instructions	Special packing provisions	Mixed packing provisions	Instructions	Special provisions
	3.1.2	2.2	2.2	2.1.1.3	5.2.2	3.3	3.4.6	4.1.4	4.1.4	4.1.10	4.2.5.2 7.3.2	4.2.5.3
(1)	(2)	(3a)	(3b)	(4)	(5)	(6)	(7)	(8)	(9a)	(9b)	(10)	(11)
2407	ISOPROPYL CHLOROFORMATE	6.1	TFC	I	6.1 +3 +8		LQ0	P602		MP8 MP17		
2409	ISOPROPYL PROPIONATE	3	F1	II	3		LQ4	P001 IBC02 R001		MP19	T4	TP1
2410	1,2,3,6-TETRAHYDROPYRIDINE	3	F1	II	3		LQ4	P001 IBC02 R001		MP19	T4	TP1
2411	BUTYRONITRILE	3	FT1	II	3 +6.1		LQ0	P001 IBC02		MP19	T7	TP1
2412	TETRAHYDROTHIOPHENE	3	F1	II	3		LQ4	P001 IBC02 R001		MP19	T4	TP1
2413	TETRAPROPYL ORTHOTITANATE	3	F1	III	3		LQ7	P001 IBC03 LP01 R001		MP19	T4	TP1
2414	THIOPHENE	3	F1	II	3		LQ4	P001 IBC02 R001		MP19	T4	TP1
2416	TRIMETHYL BORATE	3	F1	II	3		LQ4	P001 IBC02 R001		MP19	T7	TP1
2417	CARBONYL FLUORIDE	2	2TC		2.3 +8		LQ0	P200		MP9	(M)	
2418	SULPHUR TETRAFLUORIDE	2	2TC		2.3 +8		LQ0	P200		MP9		
2419	BROMOTRIFLUORO-ETHYLENE	2	2F		2.1		LQ0	P200		MP9	(M)	
2420	HEXAFLUOROACETONE	2	2TC		2.3 +8		LQ0	P200		MP9	(M)	
2421	NITROGEN TRIOXIDE	2	2TOC	CARRIAGE PROHIBITED								
2422	OCTAFLUOROBUT-2-ENE (REFRIGERANT GAS R 1318)	2	2A		2.2		LQ1	P200		MP9	(M)	
2424	OCTAFLUOROPROPANE (REFRIGERANT GAS R 218)	2	2A		2.2		LQ1	P200		MP9	(M) T50	
2426	AMMONIUM NITRATE, LIQUID, hot concentrated solution, in a concentration of more than 80% but not more than 93%	5.1	O1		5.1	252 644	LQ0				T7	TP1 TP16 TP17
2427	POTASSIUM CHLORATE, AQUEOUS SOLUTION	5.1	O1	II	5.1		LQ10	P504 IBC02		MP2	T4	TP1
2427	POTASSIUM CHLORATE, AQUEOUS SOLUTION	5.1	O1	III	5.1		LQ13	P504 IBC02 R001		MP2	T4	TP1
2428	SODIUM CHLORATE, AQUEOUS SOLUTION	5.1	O1	II	5.1		LQ10	P504 IBC02		MP2	T4	TP1
2428	SODIUM CHLORATE, AQUEOUS SOLUTION	5.1	O1	III	5.1		LQ13	P504 IBC02 R001		MP2	T4	TP1
2429	CALCIUM CHLORATE, AQUEOUS SOLUTION	5.1	O1	II	5.1		LQ10	P504 IBC02		MP2	T4	TP1
2429	CALCIUM CHLORATE, AQUEOUS SOLUTION	5.1	O1	III	5.1		LQ13	P504 IBC02 R001		MP2	T4	TP1
2430	ALKYLPHENOLS, SOLID, N.O.S. (including C_2-C_{12} homologues)	8	C4	I	8	274	LQ0	P002 IBC07		MP18	T6	TP9 TP33

ADR tank		Vehicle for tank carriage	Transport category	Special provisions for carriage				Hazard identifi-cation No.	UN No.	Name and description
Tank code	Special provisions			Packages	Bulk	Loading, unloading and handling	Operation			
4.3	4.3.5, 6.8.4	9.1.1.2	1.1.3.6	7.2.4	7.3.3	7.5.11	8.5	5.3.2.3		3.1.2
(12)	(13)	(14)	(15)	(16)	(17)	(18)	(19)	(20)	(1)	(2)
			1			CV1 CV13 CV28	S2 S9 S17		2407	ISOPROPYL CHLOROFORMATE
LGBF		FL	2				S2 S20	33	2409	ISOPROPYL PROPIONATE
LGBF		FL	2				S2 S20	33	2410	1,2,3,6-TETRAHYDROPYRIDINE
L4BH	TU15 TE15	FL	2			CV13 CV28	S2 S19	336	2411	BUTYRONITRILE
LGBF		FL	2				S2 S20	33	2412	TETRAHYDROTHIOPHENE
LGBF		FL	3				S2	30	2413	TETRAPROPYL ORTHOTITANATE
LGBF		FL	2				S2 S20	33	2414	THIOPHENE
LGBF		FL	2				S2 S20	33	2416	TRIMETHYL BORATE
PxBH(M)		AT	1			CV9 CV10 CV36	S7 S17	268	2417	CARBONYL FLUORIDE
			1			CV9 CV10 CV36	S7 S17		2418	SULPHUR TETRAFLUORIDE
PxBN(M)		FL	2			CV9 CV10 CV36	S2 S20	23	2419	BROMOTRIFLUORO-ETHYLENE
PxBH(M)		AT	1			CV9 CV10 CV36	S7 S17	268	2420	HEXAFLUOROACETONE
CARRIAGE PROHIBITED									2421	NITROGEN TRIOXIDE
PxBN(M)		AT	3			CV9 CV10 CV36		20	2422	OCTAFLUOROBUT-2-ENE (REFRIGERANT GAS R 1318)
PxBN(M)		AT	3			CV9 CV10 CV36		20	2424	OCTAFLUOROPROPANE (REFRIGERANT GAS R 218)
L4BV(+)	TU3 TU12 TU29 TC3 TE9 TE10 TA1	AT	0					59	2426	AMMONIUM NITRATE, LIQUID, hot concentrated solution, in a concentration of more than 80% but not more than 93%
L4BN	TU3	AT	2	V6		CV24		50	2427	POTASSIUM CHLORATE, AQUEOUS SOLUTION
LGBV	TU3	AT	3	V6		CV24		50	2427	POTASSIUM CHLORATE, AQUEOUS SOLUTION
L4BN	TU3	AT	2			CV24		50	2428	SODIUM CHLORATE, AQUEOUS SOLUTION
LGBV	TU3	AT	3			CV24		50	2428	SODIUM CHLORATE, AQUEOUS SOLUTION
L4BN	TU3	AT	2			CV24		50	2429	CALCIUM CHLORATE, AQUEOUS SOLUTION
LGBV	TU3	AT	3			CV24		50	2429	CALCIUM CHLORATE, AQUEOUS SOLUTION
S10AN L10BH		AT	1	V10 V12			S20	88	2430	ALKYLPHENOLS, SOLID, N.O.S. (including C_2-C_{12} homologues)

UN No.	Name and description	Class	Classification code	Packing group	Labels	Special provisions	Limited quantities	Packaging			Portable tanks and bulk containers	
								Packing instructions	Special packing provisions	Mixed packing provisions	Instructions	Special provisions
	3.1.2	2.2	2.2	2.1.1.3	5.2.2	3.3	3.4.6	4.1.4	4.1.4	4.1.10	4.2.5.2 7.3.2	4.2.5.3
(1)	(2)	(3a)	(3b)	(4)	(5)	(6)	(7)	(8)	(9a)	(9b)	(10)	(11)
2430	ALKYLPHENOLS, SOLID, N.O.S. (including C_2-C_{12} homologues)	8	C4	II	8	274	LQ23	P002 IBC08	B4	MP10	T3	TP33
2430	ALKYLPHENOLS, SOLID, N.O.S. (including C_2-C_{12} homologues)	8	C4	III	8	274	LQ24	P002 IBC08 LP02 R001	B3	MP10	T1	TP33
2431	ANISIDINES	6.1	T1	III	6.1		LQ19	P001 IBC03 LP01 R001		MP15	T4	TP1
2432	N,N-DIETHYLANILINE	6.1	T1	III	6.1	279	LQ19	P001 IBC03 LP01 R001		MP15	T4	TP1
2433	CHLORONITROTOLUENES, LIQUID	6.1	T1	III	6.1		LQ19	P001 IBC03 LP01 R001		MP15	T4	TP1
2434	DIBENZYLDICHLORO-SILANE	8	C3	II	8		LQ22	P001 IBC02		MP15	T7	TP2
2435	ETHYLPHENYLDICHLORO-SILANE	8	C3	II	8		LQ22	P001 IBC02		MP15	T7	TP2
2436	THIOACETIC ACID	3	F1	II	3		LQ4	P001 IBC02 R001		MP19	T4	TP1
2437	METHYLPHENYL-DICHLOROSILANE	8	C3	II	8		LQ22	P001 IBC02		MP15	T7	TP2
2438	TRIMETHYLACETYL CHLORIDE	6.1	TFC	I	6.1 +3 +8		LQ0	P001		MP8 MP17	T14	TP2
2439	SODIUM HYDROGENDIFLUORIDE	8	C2	II	8		LQ23	P002 IBC08	B4	MP10	T3	TP33
2440	STANNIC CHLORIDE PENTAHYDRATE	8	C2	III	8		LQ24	P002 IBC08 LP02 R001	B3	MP10	T1	TP33
2441	TITANIUM TRICHLORIDE, PYROPHORIC or TITANIUM TRICHLORIDE MIXTURE, PYROPHORIC	4.2	SC4	I	4.2 +8	537	LQ0	P404		MP13		
2442	TRICHLOROACETYL CHLORIDE	8	C3	II	8		LQ22	P001		MP15	T7	TP2
2443	VANADIUM OXYTRICHLORIDE	8	C1	II	8		LQ22	P001 IBC02		MP15	T7	TP2
2444	VANADIUM TETRACHLORIDE	8	C1	I	8		LQ0	P802		MP8 MP17	T10	TP2
2445	LITHIUM ALKYLS, LIQUID	4.2	SW	I	4.2 +4.3	274 320	LQ0	P400 PR1		MP2	T21	TP2 TP7
2446	NITROCRESOLS, SOLID	6.1	T2	III	6.1		LQ9	P002 IBC08 LP02 R001	B3	MP10	T1	TP33
2447	PHOSPHORUS, WHITE, MOLTEN	4.2	ST3	I	4.2 +6.1		LQ0				T21	TP3 TP7 TP26
2448	SULPHUR, MOLTEN	4.1	F3	III	4.1	538	LQ0				T1	TP3
2451	NITROGEN TRIFLUORIDE	2	2O		2.2 +5.1		LQ0	P200		MP9	(M)	
2452	ETHYLACETYLENE, STABILIZED	2	2F		2.1		LQ0	P200		MP9	(M)	

ADR tank		Vehicle for tank carriage	Transport category	Special provisions for carriage				Hazard identification No.	UN No.	Name and description
Tank code	Special provisions			Packages	Bulk	Loading, unloading and handling	Operation			
4.3	4.3.5, 6.8.4	9.1.1.2	1.1.3.6	7.2.4	7.3.3	7.5.11	8.5	5.3.2.3		3.1.2
(12)	(13)	(14)	(15)	(16)	(17)	(18)	(19)	(20)	(1)	(2)
SGAN L4BN		AT	2	V11				80	2430	ALKYLPHENOLS, SOLID, N.O.S. (including C_2-C_{12} homologues)
SGAV L4BN		AT	3		VV9b			80	2430	ALKYLPHENOLS, SOLID, N.O.S. (including C_2-C_{12} homologues)
L4BH	TU15 TE15 TE19	AT	2			CV13 CV28	S9	60	2431	ANISIDINES
L4BH	TU15 TE15 TE19	AT	2			CV13 CV28	S9	60	2432	N,N-DIETHYLANILINE
L4BH	TU15 TE15 TE19	AT	2			CV13 CV28	S9	60	2433	CHLORONITROTOLUENES, LIQUID
L4BN		AT	2					X80	2434	DIBENZYLDICHLORO-SILANE
L4BN		AT	2					X80	2435	ETHYLPHENYLDICHLORO-SILANE
LGBF		FL	2				S2 S20	33	2436	THIOACETIC ACID
L4BN		AT	2					X80	2437	METHYLPHENYL-DICHLOROSILANE
L10CH	TU14 TU15 TE19 TE21	FL	1			CV1 CV13 CV28	S2 S9 S17	663	2438	TRIMETHYLACETYL CHLORIDE
SGAN		AT	2	V11				80	2439	SODIUM HYDROGENDIFLUORIDE
SGAV		AT	3		VV9b			80	2440	STANNIC CHLORIDE PENTAHYDRATE
			0	V1			S20		2441	TITANIUM TRICHLORIDE, PYROPHORIC or TITANIUM TRICHLORIDE MIXTURE, PYROPHORIC
L4BN		AT	2					X80	2442	TRICHLOROACETYL CHLORIDE
L4BN		AT	2					80	2443	VANADIUM OXYTRICHLORIDE
L10BH		AT	1				S20	X88	2444	VANADIUM TETRACHLORIDE
L21DH	TU4 TU14 TU22 TC1 TE21 TM1	AT	0	V1			S20	X333	2445	LITHIUM ALKYLS, LIQUID
SGAH L4BH	TU15 TE15 TE19	AT	2		VV9b	CV13 CV28	S9	60	2446	NITROCRESOLS, SOLID
L10DH(+)	TU14 TU16 TU21 TE3 TE21	AT	0				S20	446	2447	PHOSPHORUS, WHITE, MOLTEN
LGBV(+)	TU27 TE4 TE6	AT	3					44	2448	SULPHUR, MOLTEN
PxBN(M)		AT	3			CV9 CV10 CV36		25	2451	NITROGEN TRIFLUORIDE
PxBN(M)		FL	2			CV9 CV10 CV36	S2 S20	239	2452	ETHYLACETYLENE, STABILIZED

UN No.	Name and description	Class	Classification code	Packing group	Labels	Special provisions	Limited quantities	Packaging			Portable tanks and bulk containers	
								Packing instructions	Special packing provisions	Mixed packing provisions	Instructions	Special provisions
	3.1.2	2.2	2.2	2.1.1.3	5.2.2	3.3	3.4.6	4.1.4	4.1.4	4.1.10	4.2.5.2 7.3.2	4.2.5.3
(1)	(2)	(3a)	(3b)	(4)	(5)	(6)	(7)	(8)	(9a)	(9b)	(10)	(11)
2453	ETHYL FLUORIDE (REFRIGERANT GAS R 161)	2	2F		2.1		LQ0	P200		MP9	(M)	
2454	METHYL FLUORIDE (REFRIGERANT GAS R 41)	2	2F		2.1		LQ0	P200		MP9	(M)	
2455	METHYL NITRITE	2	2A	CARRIAGE PROHIBITED								
2456	2-CHLOROPROPENE	3	F1	I	3		LQ3	P001		MP7 MP17	T11	TP2
2457	2,3-DIMETHYLBUTANE	3	F1	II	3		LQ4	P001 IBC02 R001		MP19	T7	TP1
2458	HEXADIENES	3	F1	II	3		LQ4	P001 IBC02 R001		MP19	T4	TP1
2459	2-METHYL-1-BUTENE	3	F1	I	3		LQ3	P001		MP7 MP17	T11	TP2
2460	2-METHYL-2-BUTENE	3	F1	II	3		LQ4	P001 IBC02	B8	MP19	T7	TP1
2461	METHYLPENTADIENE	3	F1	II	3		LQ4	P001 IBC02 R001		MP19	T4	TP1
2463	ALUMINIUM HYDRIDE	4.3	W2	I	4.3		LQ0	P403		MP2		
2464	BERYLLIUM NITRATE	5.1	OT2	II	5.1 +6.1		LQ11	P002 IBC08	B4	MP2	T3	TP33
2465	DICHLOROISOCYANURIC ACID, DRY or DICHLOROISOCYANURIC ACID SALTS	5.1	O2	II	5.1	135	LQ11	P002 IBC08	B4	MP10	T3	TP33
2466	POTASSIUM SUPEROXIDE	5.1	O2	I	5.1		LQ0	P503 IBC06		MP2		
2468	TRICHLOROISOCYANURIC ACID, DRY	5.1	O2	II	5.1		LQ11	P002 IBC08	B4	MP10	T3	TP33
2469	ZINC BROMATE	5.1	O2	III	5.1		LQ12	P002 IBC08 LP02 R001	B3	MP10	T1	TP33
2470	PHENYLACETONITRILE, LIQUID	6.1	T1	III	6.1		LQ19	P001 IBC03 LP01 R001		MP15	T4	TP1
2471	OSMIUM TETROXIDE	6.1	T5	I	6.1		LQ0	P002 IBC07	PP30	MP18	T6	TP33
2473	SODIUM ARSANILATE	6.1	T3	III	6.1		LQ9	P002 IBC08 LP02 R001	B3	MP10	T1	TP33
2474	THIOPHOSGENE	6.1	T1	II	6.1	279	LQ17	P001		MP15	T7	TP2
2475	VANADIUM TRICHLORIDE	8	C2	III	8		LQ24	P002 IBC08 LP02 R001	B3	MP10	T1	TP33
2477	METHYL ISOTHIOCYANATE	6.1	TF1	I	6.1 +3		LQ0	P001		MP8 MP17	T14	TP2
2478	ISOCYANATES, FLAMMABLE, TOXIC, N.O.S. or ISOCYANATE SOLUTION, FLAMMABLE, TOXIC, N.O.S.	3	FT1	II	3 +6.1	274 539	LQ0	P001 IBC02		MP19	T11	TP2 TP27

ADR tank		Vehicle for tank carriage	Transport category	Special provisions for carriage				Hazard identifi-cation No.	UN No.	Name and description
Tank code	Special provisions			Packages	Bulk	Loading, unloading and handling	Operation			
4.3	4.3.5, 6.8.4	9.1.1.2	1.1.3.6	7.2.4	7.3.3	7.5.11	8.5	5.3.2.3		3.1.2
(12)	(13)	(14)	(15)	(16)	(17)	(18)	(19)	(20)	(1)	(2)
PxBN(M)		FL	2			CV9 CV10 CV36	S2 S20	23	2453	ETHYL FLUORIDE (REFRIGERANT GAS R 161)
PxBN(M)		FL	2			CV9 CV10 CV36	S2 S20	23	2454	METHYL FLUORIDE (REFRIGERANT GAS R 41)
CARRIAGE PROHIBITED									2455	METHYL NITRITE
L4BN		FL	1				S2 S20	33	2456	2-CHLOROPROPENE
LGBF		FL	2				S2 S20	33	2457	2,3-DIMETHYLBUTANE
LGBF		FL	2				S2 S20	33	2458	HEXADIENES
L4BN		FL	1				S2 S20	33	2459	2-METHYL-1-BUTENE
L1.5BN		FL	2				S2 S20	33	2460	2-METHYL-2-BUTENE
LGBF		FL	2				S2 S20	33	2461	METHYLPENTADIENE
			1	V1		CV23	S20		2463	ALUMINIUM HYDRIDE
SGAN	TU3	AT	2	V11		CV24 CV28		56	2464	BERYLLIUM NITRATE
SGAN	TU3	AT	2			CV24		50	2465	DICHLOROISOCYANURIC ACID, DRY or DICHLOROISOCYANURIC ACID SALTS
			1	V10 V12		CV24	S20		2466	POTASSIUM SUPEROXIDE
SGAN	TU3	AT	2			CV24		50	2468	TRICHLOROISOCYANURIC ACID, DRY
SGAV	TU3	AT	3		VV8	CV24		50	2469	ZINC BROMATE
L4BH	TU15 TE15 TE19	AT	2			CV13 CV28	S9	60	2470	PHENYLACETONITRILE, LIQUID
S10AH	TU15 TE19	AT	1	V10 V12		CV1 CV13 CV28	S9 S17	66	2471	OSMIUM TETROXIDE
SGAH L4BH	TU15 TE15 TE19	AT	2		VV9b	CV13 CV28	S9	60	2473	SODIUM ARSANILATE
L4BH	TU15 TE15 TE19	AT	2			CV13 CV28	S9 S19	60	2474	THIOPHOSGENE
SGAV		AT	3		VV9b			80	2475	VANADIUM TRICHLORIDE
L10CH	TU14 TU15 TE19 TE21	FL	1			CV1 CV13 CV28	S2 S9 S17	663	2477	METHYL ISOTHIOCYANATE
L4BH	TU15 TE15	FL	2			CV13 CV28	S2 S19	336	2478	ISOCYANATES, FLAMMABLE, TOXIC, N.O.S. or ISOCYANATE SOLUTION, FLAMMABLE, TOXIC, N.O.S.

UN No.	Name and description	Class	Classification code	Packing group	Labels	Special provisions	Limited quantities	Packaging			Portable tanks and bulk containers	
								Packing instructions	Special packing provisions	Mixed packing provisions	Instructions	Special provisions
	3.1.2	2.2	2.2	2.1.1.3	5.2.2	3.3	3.4.6	4.1.4	4.1.4	4.1.10	4.2.5.2 7.3.2	4.2.5.3
(1)	(2)	(3a)	(3b)	(4)	(5)	(6)	(7)	(8)	(9a)	(9b)	(10)	(11)
2478	ISOCYANATES, FLAMMABLE, TOXIC, N.O.S. or ISOCYANATE SOLUTION, FLAMMABLE, TOXIC, N.O.S.	3	FT1	III	3 +6.1	274	LQ7	P001 IBC03 R001		MP19	T7	TP1 TP28
2480	METHYL ISOCYANATE	6.1	TF1	I	6.1 +3		LQ0	P601 PR1		MP2		
2481	ETHYL ISOCYANATE	3	FT1	I	3 +6.1		LQ0	P601 PR5		MP2	T14	TP2
2482	n-PROPYL ISOCYANATE	6.1	TF1	I	6.1 +3		LQ0	P001		MP8 MP17	T14	TP2
2483	ISOPROPYL ISOCYANATE	3	FT1	I	3 +6.1		LQ0	P001		MP7 MP17	T14	TP2
2484	tert-BUTYL ISOCYANATE	6.1	TF1	I	6.1 +3		LQ0	P001		MP8 MP17	T14	TP2
2485	n-BUTYL ISOCYANATE	6.1	TF1	I	6.1 +3		LQ0	P001		MP8 MP17	T14	TP2
2486	ISOBUTYL ISOCYANATE	3	FT1	II	3 +6.1		LQ0	P001		MP19	T8	TP2
2487	PHENYL ISOCYANATE	6.1	TF1	I	6.1 +3		LQ0	P001		MP8 MP17	T14	TP2
2488	CYCLOHEXYL ISOCYANATE	6.1	TF1	I	6.1 +3		LQ0	P001		MP8 MP17	T14	TP2
2490	DICHLOROISOPROPYL ETHER	6.1	T1	II	6.1		LQ17	P001 IBC02		MP15	T7	TP2
2491	ETHANOLAMINE or ETHANOLAMINE SOLUTION	8	C7	III	8		LQ19	P001 IBC03 LP01 R001		MP15	T4	TP1
2493	HEXAMETHYLENEIMINE	3	FC	II	3 +8		LQ4	P001 IBC02		MP19	T7	TP1
2495	IODINE PENTAFLUORIDE	5.1	OTC	I	5.1 +6.1 +8		LQ0	P200		MP2		
2496	PROPIONIC ANHYDRIDE	8	C3	III	8		LQ19	P001 IBC03 LP01 R001		MP15	T4	TP1
2498	1,2,3,6-TETRAHYDRO-BENZALDEHYDE	3	F1	III	3		LQ7	P001 IBC03 LP01 R001		MP19	T2	TP1
2501	TRIS-(1-AZIRIDINYL) PHOSPHINE OXIDE SOLUTION	6.1	T1	II	6.1		LQ17	P001 IBC02		MP15	T7	TP2
2501	TRIS-(1-AZIRIDINYL) PHOSPHINE OXIDE SOLUTION	6.1	T1	III	6.1		LQ19	P001 IBC03 LP01 R001		MP15	T4	TP1
2502	VALERYL CHLORIDE	8	CF1	II	8 +3		LQ22	P001 IBC02		MP15	T7	TP2
2503	ZIRCONIUM TETRACHLORIDE	8	C2	III	8		LQ24	P002 IBC08 LP02 R001	B3	MP10	T1	TP33
2504	TETRABROMOETHANE	6.1	T1	III	6.1		LQ19	P001 IBC03 LP01 R001		MP15	T4	TP1

ADR tank		Vehicle for tank carriage	Transport category	Special provisions for carriage				Hazard identifi-cation No.	UN No.	Name and description
Tank code	Special provisions			Packages	Bulk	Loading, unloading and handling	Operation			
4.3	4.3.5, 6.8.4	9.1.1.2	1.1.3.6	7.2.4	7.3.3	7.5.11	8.5	5.3.2.3		3.1.2
(12)	(13)	(14)	(15)	(16)	(17)	(18)	(19)	(20)	(1)	(2)
L4BH	TU15 TE15	FL	3			CV13 CV28	S2	36	2478	ISOCYANATES, FLAMMABLE, TOXIC, N.O.S. or ISOCYANATE SOLUTION, FLAMMABLE, TOXIC, N.O.S.
			1			CV1 CV13 CV28	S2 S9 S17		2480	METHYL ISOCYANATE
		FL	1			CV13 CV28	S2 S19	336	2481	ETHYL ISOCYANATE
L10CH	TU14 TU15 TE19 TE21	FL	1			CV1 CV13 CV28	S2 S9 S17	663	2482	n-PROPYL ISOCYANATE
L10CH	TU14 TU15 TE21	FL	1			CV13 CV28	S2 S19	336	2483	ISOPROPYL ISOCYANATE
L10CH	TU14 TU15 TE19 TE21	FL	1			CV1 CV13 CV28	S2 S9 S17	663	2484	tert-BUTYL ISOCYANATE
L10CH	TU14 TU15 TE19 TE21	FL	1			CV1 CV13 CV28	S2 S9 S17	663	2485	n-BUTYL ISOCYANATE
L4BH	TU15 TE15	FL	2			CV13 CV28	S2 S19	336	2486	ISOBUTYL ISOCYANATE
L10CH	TU14 TU15 TE19 TE21	FL	1			CV1 CV13 CV28	S2 S9 S17	663	2487	PHENYL ISOCYANATE
L10CH	TU14 TU15 TE19 TE21	FL	1			CV1 CV13 CV28	S2 S9 S17	663	2488	CYCLOHEXYL ISOCYANATE
L4BH	TU15 TE15 TE19	AT	2			CV13 CV28	S9 S19	60	2490	DICHLOROISOPROPYL ETHER
L4BN		AT	3					80	2491	ETHANOLAMINE or ETHANOLAMINE SOLUTION
L4BH	TE15	FL	2				S2 S20	338	2493	HEXAMETHYLENEIMINE
L10DH	TU3	AT	1			CV24 CV28	S20	568	2495	IODINE PENTAFLUORIDE
L4BN		AT	3					80	2496	PROPIONIC ANHYDRIDE
LGBF		FL	3				S2	30	2498	1,2,3,6-TETRAHYDRO-BENZALDEHYDE
L4BH	TU15 TE15 TE19	AT	2			CV13 CV28	S9 S19	60	2501	TRIS-(1-AZIRIDINYL) PHOSPHINE OXIDE SOLUTION
L4BH	TU15 TE15 TE19	AT	2			CV13 CV28	S9	60	2501	TRIS-(1-AZIRIDINYL) PHOSPHINE OXIDE SOLUTION
L4BN		FL	2				S2	83	2502	VALERYL CHLORIDE
SGAV		AT	3		VV9b			80	2503	ZIRCONIUM TETRACHLORIDE
L4BH	TU15 TE15 TE19	AT	2			CV13 CV28	S9	60	2504	TETRABROMOETHANE

UN No.	Name and description	Class	Classification code	Packing group	Labels	Special provisions	Limited quantities	Packaging			Portable tanks and bulk containers	
								Packing instructions	Special packing provisions	Mixed packing provisions	Instructions	Special provisions
	3.1.2	2.2	2.2	2.1.1.3	5.2.2	3.3	3.4.6	4.1.4	4.1.4	4.1.10	4.2.5.2 7.3.2	4.2.5.3
(1)	(2)	(3a)	(3b)	(4)	(5)	(6)	(7)	(8)	(9a)	(9b)	(10)	(11)
2505	AMMONIUM FLUORIDE	6.1	T5	III	6.1		LQ9	P002 IBC08 LP02 R001	B3	MP10	T1	TP33
2506	AMMONIUM HYDROGEN SULPHATE	8	C2	II	8		LQ23	P002 IBC08	B4	MP10	T3	TP33
2507	CHLOROPLATINIC ACID, SOLID	8	C2	III	8		LQ24	P002 IBC08 LP02 R001	B3	MP10	T1	TP33
2508	MOLYBDENUM PENTACHLORIDE	8	C2	III	8		LQ24	P002 IBC08 LP02 R001	B3	MP10	T1	TP33
2509	POTASSIUM HYDROGEN SULPHATE	8	C2	II	8		LQ23	P002 IBC08	B4	MP10	T3	TP33
2511	2-CHLOROPROPIONIC ACID	8	C3	III	8		LQ19	P001 IBC03 LP01 R001		MP15	T4	TP2
2512	AMINOPHENOLS (o-, m-, p-)	6.1	T2	III	6.1	279	LQ9	P002 IBC08 LP02 R001	B3	MP10	T1	TP33
2513	BROMOACETYL BROMIDE	8	C3	II	8		LQ22	P001 IBC02		MP15	T8	TP2 TP12
2514	BROMOBENZENE	3	F1	III	3		LQ7	P001 IBC03 LP01 R001		MP19	T2	TP1
2515	BROMOFORM	6.1	T1	III	6.1		LQ19	P001 IBC03 LP01 R001		MP15	T4	TP1
2516	CARBON TETRABROMIDE	6.1	T2	III	6.1		LQ9	P002 IBC08 LP02 R001	B3	MP10	T1	TP33
2517	1-CHLORO-1,1-DIFLUOROETHANE (REFRIGERANT GAS R 142b)	2	2F		2.1		LQ0	P200		MP9	(M) T50	
2518	1,5,9-CYCLO-DODECATRIENE	6.1	T1	III	6.1		LQ19	P001 IBC03 LP01 R001		MP15	T4	TP1
2520	CYCLOOCTADIENES	3	F1	III	3		LQ7	P001 IBC03 LP01 R001		MP19	T2	TP1
2521	DIKETENE, STABILIZED	6.1	TF1	I	6.1 +3		LQ0	P001		MP8 MP17	T14	TP2
2522	2-DIMETHYLAMINOETHYL METHACRYLATE	6.1	T1	II	6.1		LQ17	P001 IBC02		MP15	T7	TP2
2524	ETHYL ORTHOFORMATE	3	F1	III	3		LQ7	P001 IBC03 LP01 R001		MP19	T2	TP1
2525	ETHYL OXALATE	6.1	T1	III	6.1		LQ19	P001 IBC03 LP01 R001		MP15	T4	TP1
2526	FURFURYLAMINE	3	FC	III	3 +8		LQ7	P001 IBC03 R001		MP19	T4	TP1

ADR tank		Vehicle for tank carriage	Transport category	Special provisions for carriage				Hazard identifi-cation No.	UN No.	Name and description
Tank code	Special provisions			Packages	Bulk	Loading, unloading and handling	Operation			
4.3	4.3.5, 6.8.4	9.1.1.2	1.1.3.6	7.2.4	7.3.3	7.5.11	8.5	5.3.2.3		3.1.2
(12)	(13)	(14)	(15)	(16)	(17)	(18)	(19)	(20)	(1)	(2)
SGAH	TU15 TE15 TE19	AT	2		VV9b	CV13 CV28	S9	60	2505	AMMONIUM FLUORIDE
SGAV		AT	2	V11	VV9a			80	2506	AMMONIUM HYDROGEN SULPHATE
SGAV		AT	3		VV9b			80	2507	CHLOROPLATINIC ACID, SOLID
SGAV		AT	3		VV9b			80	2508	MOLYBDENUM PENTACHLORIDE
SGAV		AT	2	V11	VV9a			80	2509	POTASSIUM HYDROGEN SULPHATE
L4BN		AT	3					80	2511	2-CHLOROPROPIONIC ACID
SGAH L4BH	TU15 TE15 TE19	AT	2		VV9b	CV13 CV28	S9	60	2512	AMINOPHENOLS (o-, m-, p-)
L4BN		AT	2					X80	2513	BROMOACETYL BROMIDE
LGBF		FL	3				S2	30	2514	BROMOBENZENE
L4BH	TU15 TE15 TE19	AT	2			CV13 CV28	S9	60	2515	BROMOFORM
SGAH L4BH	TU15 TE15 TE19	AT	2		VV9b	CV13 CV28	S9	60	2516	CARBON TETRABROMIDE
PxBN(M)		FL	2			CV9 CV10 CV36	S2 S20	23	2517	1-CHLORO-1,1-DIFLUOROETHANE (REFRIGERANT GAS R 142b)
L4BH	TU15 TE15 TE19	AT	2			CV13 CV28	S9	60	2518	1,5,9-CYCLO-DODECATRIENE
LGBF		FL	3				S2	30	2520	CYCLOOCTADIENES
L10CH	TU14 TU15 TE19 TE21	FL	1			CV1 CV13 CV28	S2 S9 S17	663	2521	DIKETENE, STABILIZED
L4BH	TU15 TE15 TE19	AT	2			CV13 CV28	S9 S19	69	2522	2-DIMETHYLAMINOETHYL METHACRYLATE
LGBF		FL	3				S2	30	2524	ETHYL ORTHOFORMATE
L4BH	TU15 TE15 TE19	AT	2			CV13 CV28	S9	60	2525	ETHYL OXALATE
L4BN		FL	3				S2	38	2526	FURFURYLAMINE

UN No.	Name and description	Class	Classification code	Packing group	Labels	Special provisions	Limited quantities	Packaging			Portable tanks and bulk containers	
								Packing instructions	Special packing provisions	Mixed packing provisions	Instructions	Special provisions
	3.1.2	2.2	2.2	2.1.1.3	5.2.2	3.3	3.4.6	4.1.4	4.1.4	4.1.10	4.2.5.2 7.3.2	4.2.5.3
(1)	(2)	(3a)	(3b)	(4)	(5)	(6)	(7)	(8)	(9a)	(9b)	(10)	(11)
2527	ISOBUTYL ACRYLATE, STABILIZED	3	F1	III	3		LQ7	P001 IBC03 LP01 R001		MP19	T2	TP1
2528	ISOBUTYL ISOBUTYRATE	3	F1	III	3		LQ7	P001 IBC03 LP01 R001		MP19	T2	TP1
2529	ISOBUTYRIC ACID	3	FC	III	3 +8		LQ7	P001 IBC03 R001		MP19	T4	TP1
2531	METHACRYLIC ACID, STABILIZED	8	C3	II	8		LQ22	P001 IBC02 LP01		MP15	T7	TP1 TP18 TP30
2533	METHYL TRICHLOROACETATE	6.1	T1	III	6.1		LQ19	P001 IBC03 LP01 R001		MP15	T4	TP1
2534	METHYLCHLOROSILANE	2	2TFC		2.3 +2.1 +8		LQ0	P200		MP9	(M)	
2535	4-METHYLMORPHOLINE (N-METHYLMORPHOLINE)	3	FC	II	3 +8		LQ4	P001 IBC02		MP19	T7	TP1
2536	METHYLTETRAHYDRO-FURAN	3	F1	II	3		LQ4	P001 IBC02 R001		MP19	T4	TP1
2538	NITRONAPHTHALENE	4.1	F1	III	4.1		LQ9	P002 IBC08 LP02 R001	B3	MP10	T1	TP33
2541	TERPINOLENE	3	F1	III	3		LQ7	P001 IBC03 LP01 R001		MP19	T2	TP1
2542	TRIBUTYLAMINE	6.1	T1	II	6.1		LQ17	P001 IBC02		MP15	T7	TP2
2545	HAFNIUM POWDER, DRY	4.2	S4	I	4.2	540	LQ0	P404		MP13		
2545	HAFNIUM POWDER, DRY	4.2	S4	II	4.2	540	LQ0	P410 IBC06		MP14	T3	TP33
2545	HAFNIUM POWDER, DRY	4.2	S4	III	4.2	540	LQ0	P002 IBC08 LP02 R001	B3	MP14	T1	TP33
2546	TITANIUM POWDER, DRY	4.2	S4	I	4.2	540	LQ0	P404		MP13		
2546	TITANIUM POWDER, DRY	4.2	S4	II	4.2	540	LQ0	P410 IBC06		MP14	T3	TP33
2546	TITANIUM POWDER, DRY	4.2	S4	III	4.2	540	LQ0	P002 IBC08 LP02 R001	B3	MP14	T1	TP33
2547	SODIUM SUPEROXIDE	5.1	O2	I	5.1		LQ0	P503 IBC06		MP2		
2548	CHLORINE PENTAFLUORIDE	2	2TOC		2.3 +5.1 +8		LQ0	P200		MP9		
2552	HEXAFLUOROACETONE HYDRATE, LIQUID	6.1	T1	II	6.1		LQ17	P001 IBC02		MP15	T7	TP2
2554	METHYLALLYL CHLORIDE	3	F1	II	3		LQ4	P001 IBC02 R001		MP19	T4	TP1
2555	NITROCELLULOSE WITH WATER (not less than 25% water, by mass)	4.1	D	II	4.1	541	LQ0	P406		MP2		

ADR tank		Vehicle for tank carriage	Transport category	Special provisions for carriage				Hazard identifi-cation No.	UN No.	Name and description
Tank code	Special provisions			Packages	Bulk	Loading, unloading and handling	Operation			
4.3	4.3.5, 6.8.4	9.1.1.2	1.1.3.6	7.2.4	7.3.3	7.5.11	8.5	5.3.2.3		3.1.2
(12)	(13)	(14)	(15)	(16)	(17)	(18)	(19)	(20)	(1)	(2)
LGBF		FL	3				S2	39	2527	ISOBUTYL ACRYLATE, STABILIZED
LGBF		FL	3				S2	30	2528	ISOBUTYL ISOBUTYRATE
L4BN		FL	3				S2	38	2529	ISOBUTYRIC ACID
L4BN		AT	2					89	2531	METHACRYLIC ACID, STABILIZED
L4BH	TU15 TE15 TE19	AT	2			CV13 CV28	S9	60	2533	METHYL TRICHLOROACETATE
		FL	1			CV9 CV10 CV36	S2 S7 S17	263	2534	METHYLCHLOROSILANE
L4BH	TE15	FL	2				S2 S20	338	2535	4-METHYLMORPHOLINE (N-METHYLMORPHOLINE)
LGBF		FL	2				S2 S20	33	2536	METHYLTETRAHYDRO-FURAN
SGAV		AT	3		VV1			40	2538	NITRONAPHTHALENE
LGBF		FL	3				S2	30	2541	TERPINOLENE
L4BH	TU15 TE15 TE19	AT	2			CV13 CV28	S9 S19	60	2542	TRIBUTYLAMINE
			0	V1			S20		2545	HAFNIUM POWDER, DRY
SGAN		AT	2	V1 V12				40	2545	HAFNIUM POWDER, DRY
SGAN		AT	3	V1	VV4			40	2545	HAFNIUM POWDER, DRY
			0	V1			S20		2546	TITANIUM POWDER, DRY
SGAN		AT	2	V1 V12				40	2546	TITANIUM POWDER, DRY
SGAN		AT	3	V1	VV4			40	2546	TITANIUM POWDER, DRY
			1	V10 V12		CV24	S20		2547	SODIUM SUPEROXIDE
			1			CV9 CV10 CV36	S7 S17		2548	CHLORINE PENTAFLUORIDE
L4BH	TU15 TE15 TE19	AT	2			CV13 CV28	S9 S19	60	2552	HEXAFLUOROACETONE HYDRATE, LIQUID
LGBF		FL	2				S2 S20	33	2554	METHYLALLYL CHLORIDE
			2				S17		2555	NITROCELLULOSE WITH WATER (not less than 25% water, by mass)

UN No.	Name and description	Class	Classification code	Packing group	Labels	Special provisions	Limited quantities	Packaging			Portable tanks and bulk containers	
								Packing instructions	Special packing provisions	Mixed packing provisions	Instructions	Special provisions
	3.1.2	2.2	2.2	2.1.1.3	5.2.2	3.3	3.4.6	4.1.4	4.1.4	4.1.10	4.2.5.2 7.3.2	4.2.5.3
(1)	(2)	(3a)	(3b)	(4)	(5)	(6)	(7)	(8)	(9a)	(9b)	(10)	(11)
2556	NITROCELLULOSE WITH ALCOHOL (not less than 25% alcohol, by mass, and not more than 12.6% nitrogen, by dry mass)	4.1	D	II	4.1	541	LQ0	P406		MP2		
2557	NITROCELLULOSE, with not more than 12.6% nitrogen, by dry mass, MIXTURE WITH or WITHOUT PLASTICIZER, WITH or WITHOUT PIGMENT	4.1	D	II	4.1	241 541	LQ0	P406		MP2		
2558	EPIBROMOHYDRIN	6.1	TF1	I	6.1 +3		LQ0	P001		MP8 MP17	T14	TP2
2560	2-METHYLPENTAN-2-OL	3	F1	III	3		LQ7	P001 IBC03 LP01 R001		MP19	T2	TP1
2561	3-METHYL-1-BUTENE	3	F1	I	3		LQ3	P001		MP7 MP17	T11	TP2
2564	TRICHLOROACETIC ACID SOLUTION	8	C3	II	8		LQ22	P001 IBC02		MP15	T7	TP2
2564	TRICHLOROACETIC ACID SOLUTION	8	C3	III	8		LQ19	P001 IBC03 LP01 R001		MP15	T4	TP1
2565	DICYCLOHEXYLAMINE	8	C7	III	8		LQ19	P001 IBC03 LP01 R001		MP15	T4	TP1
2567	SODIUM PENTACHLOROPHENATE	6.1	T2	II	6.1		LQ18	P002 IBC08	B4	MP10	T3	TP33
2570	CADMIUM COMPOUND	6.1	T5	I	6.1	274 596	LQ0	P002 IBC07		MP18	T6	TP33
2570	CADMIUM COMPOUND	6.1	T5	II	6.1	274 596	LQ18	P002 IBC08	B4	MP10	T3	TP33
2570	CADMIUM COMPOUND	6.1	T5	III	6.1	274 596	LQ9	P002 IBC08 LP02 R001	B3	MP10	T1	TP33
2571	ALKYLSULPHURIC ACIDS	8	C3	II	8		LQ22	P001 IBC02		MP15	T8	TP2 TP12 TP28
2572	PHENYLHYDRAZINE	6.1	T1	II	6.1		LQ17	P001 IBC02		MP15	T7	TP2
2573	THALLIUM CHLORATE	5.1	OT2	II	5.1 +6.1		LQ11	P002 IBC06		MP2	T3	TP33
2574	TRICRESYL PHOSPHATE with more than 3% ortho isomer	6.1	T1	II	6.1		LQ17	P001 IBC02		MP15	T7	TP2
2576	PHOSPHORUS OXYBROMIDE, MOLTEN	8	C1	II	8		LQ0				T7	TP3
2577	PHENYLACETYL CHLORIDE	8	C3	II	8		LQ22	P001 IBC02		MP15	T7	TP2
2578	PHOSPHORUS TRIOXIDE	8	C2	III	8		LQ24	P002 IBC08 LP02 R001	B3	MP10	T1	TP33
2579	PIPERAZINE	8	C8	III	8		LQ24	P002 IBC08 LP02 R001	B3	MP10	T1	TP33

ADR tank		Vehicle for tank carriage	Transport category	Special provisions for carriage				Hazard identifi-cation No.	UN No.	Name and description
Tank code	Special provisions			Packages	Bulk	Loading, unloading and handling	Operation			
4.3	4.3.5, 6.8.4	9.1.1.2	1.1.3.6	7.2.4	7.3.3	7.5.11	8.5	5.3.2.3		3.1.2
(12)	(13)	(14)	(15)	(16)	(17)	(18)	(19)	(20)	(1)	(2)
			2				S17		2556	NITROCELLULOSE WITH ALCOHOL (not less than 25% alcohol, by mass, and not more than 12.6% nitrogen, by dry mass)
			2				S17		2557	NITROCELLULOSE, with not more than 12.6% nitrogen, by dry mass, MIXTURE WITH or WITHOUT PLASTICIZER, WITH or WITHOUT PIGMENT
L10CH	TU14 TU15 TE19 TE21	FL	1			CV1 CV13 CV28	S2 S9 S17	663	2558	EPIBROMOHYDRIN
LGBF		FL	3				S2	30	2560	2-METHYLPENTAN-2-OL
L4BN		FL	1				S2 S20	33	2561	3-METHYL-1-BUTENE
L4BN		AT	2					80	2564	TRICHLOROACETIC ACID SOLUTION
L4BN		AT	3					80	2564	TRICHLOROACETIC ACID SOLUTION
L4BN		AT	3					80	2565	DICYCLOHEXYLAMINE
SGAH	TU15 TE15 TE19	AT	2	V11		CV13 CV28	S9 S19	60	2567	SODIUM PENTACHLOROPHENATE
S10AH L10CH	TU14 TU15 TE19 TE21	AT	1	V10 V12		CV1 CV13 CV28	S9 S17	66	2570	CADMIUM COMPOUND
SGAH L4BH	TU15 TE15 TE19	AT	2	V11		CV13 CV28	S9 S19	60	2570	CADMIUM COMPOUND
SGAH L4BH	TU15 TE15 TE19	AT	2		VV9b	CV13 CV28	S9	60	2570	CADMIUM COMPOUND
L4BN		AT	2					80	2571	ALKYLSULPHURIC ACIDS
L4BH	TU15 TE15 TE19	AT	2			CV13 CV28	S9 S19	60	2572	PHENYLHYDRAZINE
SGAN	TU3	AT	2	V11 V12		CV24 CV28		56	2573	THALLIUM CHLORATE
L4BH	TU15 TE15 TE19	AT	2			CV13 CV28	S9 S19	60	2574	TRICRESYL PHOSPHATE with more than 3% ortho isomer
L4BN		AT	2					80	2576	PHOSPHORUS OXYBROMIDE, MOLTEN
L4BN		AT	2					80	2577	PHENYLACETYL CHLORIDE
SGAV		AT	3		VV9b			80	2578	PHOSPHORUS TRIOXIDE
SGAV L4BN		AT	3		VV9b			80	2579	PIPERAZINE

UN No.	Name and description	Class	Classification code	Packing group	Labels	Special provisions	Limited quantities	Packaging			Portable tanks and bulk containers	
								Packing instructions	Special packing provisions	Mixed packing provisions	Instructions	Special provisions
	3.1.2	2.2	2.2	2.1.1.3	5.2.2	3.3	3.4.6	4.1.4	4.1.4	4.1.10	4.2.5.2 7.3.2	4.2.5.3
(1)	(2)	(3a)	(3b)	(4)	(5)	(6)	(7)	(8)	(9a)	(9b)	(10)	(11)
2580	ALUMINIUM BROMIDE SOLUTION	8	C1	III	8		LQ19	P001 IBC03 LP01 R001		MP15	T4	TP1
2581	ALUMINIUM CHLORIDE SOLUTION	8	C1	III	8		LQ19	P001 IBC03 LP01 R001		MP15	T4	TP1
2582	FERRIC CHLORIDE SOLUTION	8	C1	III	8		LQ19	P001 IBC03 LP01 R001		MP15	T4	TP1
2583	ALKYLSULPHONIC ACIDS, SOLID or ARYLSULPHONIC ACIDS, SOLID with more than 5% free sulphuric acid	8	C2	II	8	274	LQ23	P002 IBC08	B4	MP10	T3	TP33
2584	ALKYLSULPHONIC ACIDS, LIQUID or ARYLSULPHONIC ACIDS, LIQUID with more than 5% free sulphuric acid	8	C1	II	8	274	LQ22	P001 IBC02		MP15	T8	TP2 TP12
2585	ALKYLSULPHONIC ACIDS, SOLID or ARYLSULPHONIC ACIDS, SOLID with not more than 5% free sulphuric acid	8	C4	III	8	274	LQ24	P002 IBC08 LP02 R001	B3	MP10	T1	TP33
2586	ALKYLSULPHONIC ACIDS, LIQUID or ARYLSULPHONIC ACIDS, LIQUID with not more than 5% free sulphuric acid	8	C3	III	8	274	LQ19	P001 IBC03 LP01 R001		MP15	T4	TP1
2587	BENZOQUINONE	6.1	T2	II	6.1		LQ18	P002 IBC08	B4	MP10	T3	TP33
2588	PESTICIDE, SOLID, TOXIC, N.O.S.	6.1	T7	I	6.1	61 648	LQ0	P002 IBC02		MP18	T6	TP9 TP33
2588	PESTICIDE, SOLID, TOXIC, N.O.S.	6.1	T7	II	6.1	61 648	LQ18	P002 IBC08	B4	MP10	T3	TP33
2588	PESTICIDE, SOLID, TOXIC, N.O.S.	6.1	T7	III	6.1	61 648	LQ9	P002 IBC08 LP02 R001	B3	MP10	T1	TP33
2589	VINYL CHLOROACETATE	6.1	TF1	II	6.1 +3		LQ17	P001 IBC02		MP15	T7	TP2
2590	WHITE ASBESTOS (chrysotile, actinolite, anthophyllite, tremolite)	9	M1	III	9	168 542	LQ27	P002 IBC08 R001	PP37 B4	MP10	T1	TP33
2591	XENON, REFRIGERATED LIQUID	2	3A		2.2	593	LQ1	P203		MP9	T75	TP5
2599	CHLOROTRIFLUORO-METHANE AND TRIFLUOROMETHANE AZEOTROPIC MIXTURE with approximately 60% chlorotrifluoromethane (REFRIGERANT GAS R 503)	2	2A		2.2		LQ1	P200		MP9	(M)	
2600	CARBON MONOXIDE AND HYDROGEN MIXTURE, COMPRESSED	2	1TF		2.3 +2.1		LQ0	P200		MP9	(M)	
2601	CYCLOBUTANE	2	2F		2.1		LQ0	P200		MP9	(M)	

ADR tank		Vehicle for tank carriage	Transport category	Special provisions for carriage				Hazard identifi-cation No.	UN No.	Name and description
Tank code	Special provisions			Packages	Bulk	Loading, unloading and handling	Operation			
4.3	4.3.5, 6.8.4	9.1.1.2	1.1.3.6	7.2.4	7.3.3	7.5.11	8.5	5.3.2.3		3.1.2
(12)	(13)	(14)	(15)	(16)	(17)	(18)	(19)	(20)	(1)	(2)
L4BN		AT	3					80	2580	ALUMINIUM BROMIDE SOLUTION
L4BN		AT	3					80	2581	ALUMINIUM CHLORIDE SOLUTION
L4BN		AT	3					80	2582	FERRIC CHLORIDE SOLUTION
S4BN		AT	2	V11				80	2583	ALKYLSULPHONIC ACIDS, SOLID or ARYLSULPHONIC ACIDS, SOLID with more than 5% free sulphuric acid
L4BN		AT	2					80	2584	ALKYLSULPHONIC ACIDS, LIQUID or ARYLSULPHONIC ACIDS, LIQUID with more than 5% free sulphuric acid
SGAV		AT	3		VV9b			80	2585	ALKYLSULPHONIC ACIDS, SOLID or ARYLSULPHONIC ACIDS, SOLID with not more than 5% free sulphuric acid
L4BN		AT	3					80	2586	ALKYLSULPHONIC ACIDS, LIQUID or ARYLSULPHONIC ACIDS, LIQUID with not more than 5% free sulphuric acid
SGAH L4BH	TU15 TE15 TE19	AT	2	V11		CV13 CV28	S9 S19	60	2587	BENZOQUINONE
S10AH L10CH	TU14 TU15 TE19 TE21	AT	1			CV1 CV13 CV28	S9 S17	66	2588	PESTICIDE, SOLID, TOXIC, N.O.S.
SGAH L4BH	TU15 TE15 TE19	AT	2	V11		CV13 CV28	S9 S19	60	2588	PESTICIDE, SOLID, TOXIC, N.O.S.
SGAH L4BH	TU15 TE15 TE19	AT	2		VV9b	CV13 CV28	S9	60	2588	PESTICIDE, SOLID, TOXIC, N.O.S.
L4BH	TU15 TE15 TE19	FL	2			CV13 CV28	S2 S9 S19	63	2589	VINYL CHLOROACETATE
SGAH	TU15 TE15	AT	3			CV13 CV28		90	2590	WHITE ASBESTOS (chrysotile, actinolite, anthophyllite, tremolite)
RxBN	TU19	AT	3	V5		CV9 CV11 CV36	S20	22	2591	XENON, REFRIGERATED LIQUID
PxBN(M)		AT	3			CV9 CV10 CV36		20	2599	CHLOROTRIFLUORO-METHANE AND TRIFLUOROMETHANE AZEOTROPIC MIXTURE with approximately 60% chlorotrifluoromethane (REFRIGERANT GAS R 503)
CxBH(M)		FL	1			CV9 CV10 CV36	S2 S7 S17	263	2600	CARBON MONOXIDE AND HYDROGEN MIXTURE, COMPRESSED
PxBN(M)		FL	2			CV9 CV10 CV36	S2 S20	23	2601	CYCLOBUTANE

UN No.	Name and description	Class	Classification code	Packing group	Labels	Special provisions	Limited quantities	Packaging			Portable tanks and bulk containers	
								Packing instructions	Special packing provisions	Mixed packing provisions	Instructions	Special provisions
	3.1.2	2.2	2.2	2.1.1.3	5.2.2	3.3	3.4.6	4.1.4	4.1.4	4.1.10	4.2.5.2 7.3.2	4.2.5.3
(1)	(2)	(3a)	(3b)	(4)	(5)	(6)	(7)	(8)	(9a)	(9b)	(10)	(11)
2602	DICHLORODIFLUORO-METHANE AND 1,1-DIFLUOROETHANE AZEOTROPIC MIXTURE with approximately 74% dichlorodifluoromethane (REFRIGERANT GAS R 500)	2	2A		2.2		LQ1	P200		MP9	(M) T50	
2603	CYCLOHEPTATRIENE	3	FT1	II	3 +6.1		LQ0	P001 IBC02		MP19	T7	TP1
2604	BORON TRIFLUORIDE DIETHYL ETHERATE	8	CF1	I	8 +3		LQ0	P001		MP8 MP17	T10	TP2
2605	METHOXYMETHYL ISOCYANATE	3	FT1	I	3 +6.1		LQ0	P001		MP7 MP17	T14	TP2
2606	METHYL ORTHOSILICATE	6.1	TF1	I	6.1 +3		LQ0	P001		MP8 MP17	T14	TP2
2607	ACROLEIN DIMER, STABILIZED	3	F1	III	3		LQ7	P001 IBC03 LP01 R001		MP19	T2	TP1
2608	NITROPROPANES	3	F1	III	3		LQ7	P001 IBC03 LP01 R001		MP19	T2	TP1
2609	TRIALLYL BORATE	6.1	T1	III	6.1		LQ19	P001 IBC03 LP01 R001		MP15		
2610	TRIALLYLAMINE	3	FC	III	3 +8		LQ7	P001 IBC03 R001		MP19	T4	TP1
2611	PROPYLENE CHLOROHYDRIN	6.1	TF1	II	6.1 +3		LQ17	P001 IBC02		MP15	T7	TP2
2612	METHYL PROPYL ETHER	3	F1	II	3		LQ4	P001 IBC02	B8	MP19	T7	TP2
2614	METHALLYL ALCOHOL	3	F1	III	3		LQ7	P001 IBC03 LP01 R001		MP19	T2	TP1
2615	ETHYL PROPYL ETHER	3	F1	II	3		LQ4	P001 IBC02 R001		MP19	T4	TP1
2616	TRIISOPROPYL BORATE	3	F1	II	3		LQ4	P001 IBC02 R001		MP19	T4	TP1
2616	TRIISOPROPYL BORATE	3	F1	III	3		LQ7	P001 IBC03 LP01 R001		MP19	T2	TP1
2617	METHYLCYCLO-HEXANOLS, flammable	3	F1	III	3		LQ7	P001 IBC03 LP01 R001		MP19	T2	TP1
2618	VINYLTOLUENES, STABILIZED	3	F1	III	3		LQ7	P001 IBC03 LP01 R001		MP19	T2	TP1
2619	BENZYLDIMETHYLAMINE	8	CF1	II	8 +3		LQ22	P001 IBC02		MP15	T7	TP2
2620	AMYL BUTYRATES	3	F1	III	3		LQ7	P001 IBC03 LP01 R001		MP19	T2	TP1

ADR tank		Vehicle for tank carriage	Transport category	Special provisions for carriage				Hazard identifi-cation No.	UN No.	Name and description
Tank code	Special provisions			Packages	Bulk	Loading, unloading and handling	Operation			
4.3	4.3.5, 6.8.4	9.1.1.2	1.1.3.6	7.2.4	7.3.3	7.5.11	8.5	5.3.2.3		3.1.2
(12)	(13)	(14)	(15)	(16)	(17)	(18)	(19)	(20)	(1)	(2)
PxBN(M)		AT	3			CV9 CV10 CV36		20	2602	DICHLORODIFLUORO-METHANE AND 1,1-DIFLUOROETHANE AZEOTROPIC MIXTURE with approximately 74% dichlorodifluoromethane (REFRIGERANT GAS R 500)
L4BH	TU15 TE15	FL	2			CV13 CV28	S2 S19	336	2603	CYCLOHEPTATRIENE
L10BH		FL	1				S2 S20	883	2604	BORON TRIFLUORIDE DIETHYL ETHERATE
L10CH	TU14 TU15 TE21	FL	1			CV13 CV28	S2 S19	336	2605	METHOXYMETHYL ISOCYANATE
L10CH	TU14 TU15 TE19 TE21	FL	1			CV1 CV13 CV28	S2 S9 S17	663	2606	METHYL ORTHOSILICATE
LGBF		FL	3				S2	39	2607	ACROLEIN DIMER, STABILIZED
LGBF		FL	3				S2	30	2608	NITROPROPANES
L4BH	TU15 TE15 TE19	AT	2			CV13 CV28	S9	60	2609	TRIALLYL BORATE
L4BN		FL	3				S2	38	2610	TRIALLYLAMINE
L4BH	TU15 TE15 TE19	FL	2			CV13 CV28	S2 S9 S19	63	2611	PROPYLENE CHLOROHYDRIN
L1.5BN		FL	2				S2 S20	33	2612	METHYL PROPYL ETHER
LGBF		FL	3				S2	30	2614	METHALLYL ALCOHOL
LGBF		FL	2				S2 S20	33	2615	ETHYL PROPYL ETHER
LGBF		FL	2				S2 S20	33	2616	TRIISOPROPYL BORATE
LGBF		FL	3				S2	30	2616	TRIISOPROPYL BORATE
LGBF		FL	3				S2	30	2617	METHYLCYCLO-HEXANOLS, flammable
LGBF		FL	3				S2	39	2618	VINYLTOLUENES, STABILIZED
L4BN		FL	2				S2	83	2619	BENZYLDIMETHYLAMINE
LGBF		FL	3				S2	30	2620	AMYL BUTYRATES

UN No.	Name and description	Class	Classification code	Packing group	Labels	Special provisions	Limited quantities	Packaging			Portable tanks and bulk containers	
								Packing instructions	Special packing provisions	Mixed packing provisions	Instructions	Special provisions
	3.1.2	2.2	2.2	2.1.1.3	5.2.2	3.3	3.4.6	4.1.4	4.1.4	4.1.10	4.2.5.2 7.3.2	4.2.5.3
(1)	(2)	(3a)	(3b)	(4)	(5)	(6)	(7)	(8)	(9a)	(9b)	(10)	(11)
2621	ACETYL METHYL CARBINOL	3	F1	III	3		LQ7	P001 IBC03 LP01 R001		MP19	T2	TP1
2622	GLYCIDALDEHYDE	3	FT1	II	3 +6.1		LQ0	P001 IBC02	B8	MP19	T7	TP1
2623	FIRELIGHTERS, SOLID with flammable liquid	4.1	F1	III	4.1		LQ9	P002 LP02 R001	PP15	MP11		
2624	MAGNESIUM SILICIDE	4.3	W2	II	4.3		LQ11	P410 IBC07		MP14	T3	TP33
2626	CHLORIC ACID, AQUEOUS SOLUTION with not more than 10% chloric acid	5.1	O1	II	5.1	613	LQ10	P504 IBC02		MP2	T4	TP1
2627	NITRITES, INORGANIC, N.O.S.	5.1	O2	II	5.1	103 274	LQ11	P002 IBC08	B4	MP10	T3	TP33
2628	POTASSIUM FLUOROACETATE	6.1	T2	I	6.1		LQ0	P002 IBC07		MP18	T6	TP33
2629	SODIUM FLUOROACETATE	6.1	T2	I	6.1		LQ0	P002 IBC07		MP18	T6	TP33
2630	SELENATES or SELENITES	6.1	T5	I	6.1	274	LQ0	P002 IBC07		MP18	T6	TP33
2642	FLUOROACETIC ACID	6.1	T2	I	6.1		LQ0	P002 IBC07		MP18	T6	TP33
2643	METHYL BROMOACETATE	6.1	T1	II	6.1		LQ17	P001 IBC02		MP15	T7	TP2
2644	METHYL IODIDE	6.1	T1	I	6.1		LQ0	P001		MP8 MP17	T14	TP2
2645	PHENACYL BROMIDE	6.1	T2	II	6.1		LQ18	P002 IBC08	B4	MP10	T3	TP33
2646	HEXACHLOROCYCLO-PENTADIENE	6.1	T1	I	6.1		LQ0	P001		MP8 MP17	T14	TP2
2647	MALONONITRILE	6.1	T2	II	6.1		LQ18	P002 IBC08	B4	MP10	T3	TP33
2648	1,2-DIBROMOBUTAN-3-ONE	6.1	T1	II	6.1		LQ17	P001 IBC02		MP15		
2649	1,3-DICHLOROACETONE	6.1	T2	II	6.1		LQ18	P002 IBC08	B4	MP10	T3	TP33
2650	1,1-DICHLORO-1-NITROETHANE	6.1	T1	II	6.1		LQ17	P001 IBC02		MP15	T7	TP2
2651	4,4'-DIAMINODIPHENYL-METHANE	6.1	T2	III	6.1		LQ9	P002 IBC08 LP02 R001	B3	MP10	T1	TP33
2653	BENZYL IODIDE	6.1	T1	II	6.1		LQ17	P001 IBC02		MP15	T7	TP2
2655	POTASSIUM FLUOROSILICATE	6.1	T5	III	6.1		LQ9	P002 IBC08 LP02 R001	B3	MP10	T1	TP33
2656	QUINOLINE	6.1	T1	III	6.1		LQ19	P001 IBC03 LP01 R001		MP15	T4	TP1
2657	SELENIUM DISULPHIDE	6.1	T5	II	6.1		LQ18	P002 IBC08	B4	MP10	T3	TP33
2659	SODIUM CHLOROACETATE	6.1	T2	III	6.1		LQ9	P002 IBC08 LP02 R001	B3	MP10	T1	TP33

ADR tank		Vehicle for tank carriage	Transport category	Special provisions for carriage				Hazard identification No.	UN No.	Name and description
Tank code	Special provisions			Packages	Bulk	Loading, unloading and handling	Operation			
4.3	4.3.5, 6.8.4	9.1.1.2	1.1.3.6	7.2.4	7.3.3	7.5.11	8.5	5.3.2.3		3.1.2
(12)	(13)	(14)	(15)	(16)	(17)	(18)	(19)	(20)	(1)	(2)
LGBF		FL	3				S2	30	2621	ACETYL METHYL CARBINOL
L4BH	TU15 TE15	FL	2			CV13 CV28	S2 S19	336	2622	GLYCIDALDEHYDE
			4						2623	FIRELIGHTERS, SOLID with flammable liquid
SGAN		AT	2	V1 V12		CV23		423	2624	MAGNESIUM SILICIDE
L4BN	TU3	AT	2			CV24		50	2626	CHLORIC ACID, AQUEOUS SOLUTION with not more than 10% chloric acid
SGAN	TU3	AT	2			CV24		50	2627	NITRITES, INORGANIC, N.O.S.
S10AH	TU15 TE19	AT	1	V10 V12		CV1 CV13 CV28	S9 S17	66	2628	POTASSIUM FLUOROACETATE
S10AH	TU15 TE19	AT	1	V10 V12		CV1 CV13 CV28	S9 S17	66	2629	SODIUM FLUOROACETATE
S10AH L10CH	TU14 TU15 TE19 TE21	AT	1	V10 V12		CV1 CV13 CV28	S9 S17	66	2630	SELENATES or SELENITES
S10AH L10CH	TU14 TU15 TE19 TE21	AT	1	V10 V12		CV1 CV13 CV28	S9 S17	66	2642	FLUOROACETIC ACID
L4BH	TU15 TE15 TE19	AT	2			CV13 CV28	S9 S19	60	2643	METHYL BROMOACETATE
L10CH	TU14 TU15 TE19 TE21	AT	1			CV1 CV13 CV28	S9 S17	66	2644	METHYL IODIDE
SGAH L4BH	TU15 TE15 TE19	AT	2	V11		CV13 CV28	S9 S19	60	2645	PHENACYL BROMIDE
L10CH	TU14 TU15 TE19 TE21	AT	1			CV1 CV13 CV28	S9 S17	66	2646	HEXACHLOROCYCLO-PENTADIENE
SGAH L4BH	TU15 TE15 TE19	AT	2	V11		CV13 CV28	S9 S19	60	2647	MALONONITRILE
L4BH	TU15 TE15 TE19	AT	2			CV13 CV28	S9 S19	60	2648	1,2-DIBROMOBUTAN-3-ONE
SGAH L4BH	TU15 TE15 TE19	AT	2	V11		CV13 CV28	S9 S19	60	2649	1,3-DICHLOROACETONE
L4BH	TU15 TE15 TE19	AT	2			CV13 CV28	S9 S19	60	2650	1,1-DICHLORO-1-NITROETHANE
SGAH L4BH	TU15 TE15 TE19	AT	2		VV9b	CV13 CV28	S9	60	2651	4,4'-DIAMINODIPHENYL-METHANE
L4BH	TU15 TE15 TE19	AT	2			CV13 CV28	S9 S19	60	2653	BENZYL IODIDE
SGAH L4BH	TU15 TE15 TE19	AT	2		VV9b	CV13 CV28	S9	60	2655	POTASSIUM FLUOROSILICATE
L4BH	TU15 TE15 TE19	AT	2			CV13 CV28	S9	60	2656	QUINOLINE
SGAH L4BH	TU15 TE15 TE19	AT	2	V11		CV13 CV28	S9 S19	60	2657	SELENIUM DISULPHIDE
SGAH	TU15 TE15 TE19	AT	2		VV9b	CV13 CV28	S9	60	2659	SODIUM CHLOROACETATE

UN No.	Name and description	Class	Classification code	Packing group	Labels	Special provisions	Limited quantities	Packaging			Portable tanks and bulk containers	
								Packing instructions	Special packing provisions	Mixed packing provisions	Instructions	Special provisions
	3.1.2	2.2	2.2	2.1.1.3	5.2.2	3.3	3.4.6	4.1.4	4.1.4	4.1.10	4.2.5.2 7.3.2	4.2.5.3
(1)	(2)	(3a)	(3b)	(4)	(5)	(6)	(7)	(8)	(9a)	(9b)	(10)	(11)
2660	NITROTOLUIDINES (MONO)	6.1	T2	III	6.1		LQ9	P002 IBC08 LP02 R001	B3	MP10	T1	TP33
2661	HEXACHLOROACETONE	6.1	T1	III	6.1		LQ19	P001 IBC03 LP01 R001		MP15	T4	TP1
2662	HYDROQUINONE, SOLID	6.1	T2	III	6.1		LQ9	P002 IBC08 LP02 R001	B3	MP10	T1	TP33
2664	DIBROMOMETHANE	6.1	T1	III	6.1		LQ19	P001 IBC03 LP01 R001		MP15	T4	TP1
2667	BUTYLTOLUENES	6.1	T1	III	6.1		LQ19	P001 IBC03 LP01 R001		MP15	T4	TP1
2668	CHLOROACETONITRILE	6.1	TF1	II	6.1 +3		LQ17	P001 IBC02		MP15	T7	TP2
2669	CHLOROCRESOLS SOLUTION	6.1	T1	II	6.1		LQ17	P001 IBC02		MP15	T7	TP2
2669	CHLOROCRESOLS SOLUTION	6.1	T1	III	6.1		LQ19	P001 IBC03 LP01 R001		MP15	T7	TP2
2670	CYANURIC CHLORIDE	8	C4	II	8		LQ23	P002 IBC08	B4	MP10	T3	TP33
2671	AMINOPYRIDINES (o-, m-, p-)	6.1	T2	II	6.1		LQ18	P002 IBC08	B4	MP10	T3	TP33
2672	AMMONIA SOLUTION, relative density between 0.880 and 0.957 at 15 °C in water, with more than 10% but not more than 35% ammonia	8	C5	III	8	543	LQ19	P001 IBC03 LP01 R001		MP15	T7	TP1
2673	2-AMINO-4-CHLOROPHENOL	6.1	T2	II	6.1		LQ18	P002 IBC08	B4	MP10	T3	TP33
2674	SODIUM FLUOROSILICATE	6.1	T5	III	6.1		LQ9	P002 IBC08 LP02 R001	B3	MP10	T1	TP33
2676	STIBINE	2	2TF		2.3 +2.1		LQ0	P200		MP9		
2677	RUBIDIUM HYDROXIDE SOLUTION	8	C5	II	8		LQ22	P001 IBC02		MP15	T7	TP2
2677	RUBIDIUM HYDROXIDE SOLUTION	8	C5	III	8		LQ19	P001 IBC03 LP01 R001		MP15	T4	TP1
2678	RUBIDIUM HYDROXIDE	8	C6	II	8		LQ23	P002 IBC08	B4	MP10	T3	TP33
2679	LITHIUM HYDROXIDE SOLUTION	8	C5	II	8		LQ22	P001 IBC02		MP15	T7	TP2
2679	LITHIUM HYDROXIDE SOLUTION	8	C5	III	8		LQ19	P001 IBC03 LP01 R001		MP15	T4	TP2
2680	LITHIUM HYDROXIDE	8	C6	II	8		LQ23	P002 IBC08	B4	MP10	T3	TP33
2681	CAESIUM HYDROXIDE SOLUTION	8	C5	II	8		LQ22	P001 IBC02		MP15	T7	TP2

ADR tank		Vehicle for tank carriage	Transport category	Special provisions for carriage				Hazard identifi-cation No.	UN No.	Name and description
Tank code	Special provisions			Packages	Bulk	Loading, unloading and handling	Operation			
4.3	4.3.5, 6.8.4	9.1.1.2	1.1.3.6	7.2.4	7.3.3	7.5.11	8.5	5.3.2.3		3.1.2
(12)	(13)	(14)	(15)	(16)	(17)	(18)	(19)	(20)	(1)	(2)
SGAH L4BH	TU15 TE15 TE19	AT	2		VV9b	CV13 CV28	S9	60	2660	NITROTOLUIDINES (MONO)
L4BH	TU15 TE15 TE19	AT	2			CV13 CV28	S9	60	2661	HEXACHLOROACETONE
SGAH L4BH	TU15 TE15 TE19	AT	2		VV9b	CV13 CV28	S9	60	2662	HYDROQUINONE, SOLID
L4BH	TU15 TE15 TE19	AT	2			CV13 CV28	S9	60	2664	DIBROMOMETHANE
L4BH	TU15 TE15 TE19	AT	2			CV13 CV28	S9	60	2667	BUTYLTOLUENES
L4BH	TU15 TE15 TE19	FL	2			CV13 CV28	S2 S9 S19	63	2668	CHLOROACETONITRILE
L4BH	TU15 TE15 TE19	AT	2			CV13 CV28	S9 S19	60	2669	CHLOROCRESOLS SOLUTION
L4BH	TU15 TE15 TE19	AT	2			CV13 CV28	S9	60	2669	CHLOROCRESOLS SOLUTION
SGAN L4BN		AT	2	V11				80	2670	CYANURIC CHLORIDE
SGAH L4BH	TU15 TE15 TE19	AT	2	V11		CV13 CV28	S9 S19	60	2671	AMINOPYRIDINES (o-, m-, p-)
L4BN		AT	3					80	2672	AMMONIA SOLUTION, relative density between 0.880 and 0.957 at 15 °C in water, with more than 10% but not more than 35% ammonia
SGAH L4BH	TU15 TE15 TE19	AT	2	V11		CV13 CV28	S9 S19	60	2673	2-AMINO-4-CHLOROPHENOL
SGAH L4BH	TU15 TE15 TE19	AT	2		VV9b	CV13 CV28	S9	60	2674	SODIUM FLUOROSILICATE
			1			CV9 CV10 CV36	S2 S7 S17		2676	STIBINE
L4BN		AT	2					80	2677	RUBIDIUM HYDROXIDE SOLUTION
L4BN		AT	3					80	2677	RUBIDIUM HYDROXIDE SOLUTION
SGAN		AT	2	V11				80	2678	RUBIDIUM HYDROXIDE
L4BN		AT	2					80	2679	LITHIUM HYDROXIDE SOLUTION
L4BN		AT	3					80	2679	LITHIUM HYDROXIDE SOLUTION
SGAN		AT	2	V11				80	2680	LITHIUM HYDROXIDE
L4BN		AT	2					80	2681	CAESIUM HYDROXIDE SOLUTION

UN No.	Name and description	Class	Classification code	Packing group	Labels	Special provisions	Limited quantities	Packaging			Portable tanks and bulk containers	
								Packing instructions	Special packing provisions	Mixed packing provisions	Instructions	Special provisions
	3.1.2	2.2	2.2	2.1.1.3	5.2.2	3.3	3.4.6	4.1.4	4.1.4	4.1.10	4.2.5.2 7.3.2	4.2.5.3
(1)	(2)	(3a)	(3b)	(4)	(5)	(6)	(7)	(8)	(9a)	(9b)	(10)	(11)
2681	CAESIUM HYDROXIDE SOLUTION	8	C5	III	8		LQ19	P001 IBC03 LP01 R001		MP15	T4	TP1
2682	CAESIUM HYDROXIDE	8	C6	II	8		LQ23	P002 IBC08	B4	MP10	T3	TP33
2683	AMMONIUM SULPHIDE SOLUTION	8	CFT	II	8 +3 +6.1		LQ22	P001 IBC01		MP15	T7	TP2
2684	3-DIETHYLAMINOPROPYL-AMINE	3	FC	III	3 +8		LQ7	P001 IBC03 R001		MP19	T4	TP1
2685	N,N-DIETHYLETHYLENE-DIAMINE	8	CF1	II	8 +3		LQ22	P001 IBC02		MP15	T7	TP2
2686	2-DIETHYLAMINO-ETHANOL	8	CF1	II	8 +3		LQ22	P001 IBC02		MP15	T7	TP2
2687	DICYCLOHEXYL-AMMONIUM NITRITE	4.1	F3	III	4.1		LQ9	P002 IBC08 LP02 R001	B3	MP11	T1	TP33
2688	1-BROMO-3-CHLOROPROPANE	6.1	T1	III	6.1		LQ19	P001 IBC03 LP01 R001		MP15	T4	TP1
2689	GLYCEROL alpha-MONOCHLOROHYDRIN	6.1	T1	III	6.1		LQ19	P001 IBC03 LP01 R001		MP15	T4	TP1
2690	N,n-BUTYLIMIDAZOLE	6.1	T1	II	6.1		LQ17	P001 IBC02		MP15	T7	TP2
2691	PHOSPHORUS PENTABROMIDE	8	C2	II	8		LQ23	P002 IBC08	B4	MP10	T3	TP33
2692	BORON TRIBROMIDE	8	C1	I	8		LQ0	P602		MP8 MP17	T20	TP2 TP12
2693	BISULPHITES, AQUEOUS SOLUTION, N.O.S.	8	C1	III	8	274	LQ19	P001 IBC03 LP01 R001		MP15	T7	TP1 TP28
2698	TETRAHYDROPHTHALIC ANHYDRIDES with more than 0.05% of maleic anhydride	8	C4	III	8	169	LQ24	P002 IBC08 LP02 R001	PP14 B3	MP10	T1	TP33
2699	TRIFLUOROACETIC ACID	8	C3	I	8		LQ0	P001		MP8 MP17	T10	TP2 TP12
2705	1-PENTOL	8	C9	II	8		LQ22	P001 IBC02		MP15	T7	TP2
2707	DIMETHYLDIOXANES	3	F1	II	3		LQ4	P001 IBC02 R001		MP19	T4	TP1
2707	DIMETHYLDIOXANES	3	F1	III	3		LQ7	P001 IBC03 LP01 R001		MP19	T2	TP1
2709	BUTYLBENZENES	3	F1	III	3		LQ7	P001 IBC03 LP01 R001		MP19	T2	TP1
2710	DIPROPYL KETONE	3	F1	III	3		LQ7	P001 IBC03 LP01 R001		MP19	T2	TP1
2713	ACRIDINE	6.1	T2	III	6.1		LQ9	P002 IBC08 LP02 R001	B3	MP10	T1	TP33

ADR tank		Vehicle for tank carriage	Transport category	Special provisions for carriage				Hazard identifi-cation No.	UN No.	Name and description
Tank code	Special provisions			Packages	Bulk	Loading, unloading and handling	Operation			
4.3	4.3.5, 6.8.4	9.1.1.2	1.1.3.6	7.2.4	7.3.3	7.5.11	8.5	5.3.2.3		3.1.2
(12)	(13)	(14)	(15)	(16)	(17)	(18)	(19)	(20)	(1)	(2)
L4BN		AT	3					80	2681	CAESIUM HYDROXIDE SOLUTION
SGAN		AT	2	V11				80	2682	CAESIUM HYDROXIDE
L4BN		FL	2			CV13 CV28	S2	86	2683	AMMONIUM SULPHIDE SOLUTION
L4BN		FL	3				S2	38	2684	3-DIETHYLAMINOPROPYL-AMINE
L4BN		FL	2				S2	83	2685	N,N-DIETHYLETHYLENE-DIAMINE
L4BN		FL	2				S2	83	2686	2-DIETHYLAMINO-ETHANOL
SGAV		AT	3		VV1			40	2687	DICYCLOHEXYL-AMMONIUM NITRITE
L4BH	TU15 TE15 TE19	AT	2			CV13 CV28	S9	60	2688	1-BROMO-3-CHLOROPROPANE
L4BH	TU15 TE15 TE19	AT	2			CV13 CV28	S9	60	2689	GLYCEROL alpha-MONOCHLOROHYDRIN
L4BH	TU15 TE15 TE19	AT	2			CV13 CV28	S9 S19	60	2690	N,n-BUTYLIMIDAZOLE
SGAN		AT	2	V11				80	2691	PHOSPHORUS PENTABROMIDE
L10BH		AT	1				S20	X88	2692	BORON TRIBROMIDE
L4BN		AT	3					80	2693	BISULPHITES, AQUEOUS SOLUTION, N.O.S.
SGAV L4BN		AT	3		VV9b			80	2698	TETRAHYDROPHTHALIC ANHYDRIDES with more than 0.05% of maleic anhydride
L10BH		AT	1				S20	88	2699	TRIFLUOROACETIC ACID
L4BN		AT	2					80	2705	1-PENTOL
LGBF		FL	2				S2 S20	33	2707	DIMETHYLDIOXANES
LGBF		FL	3				S2	30	2707	DIMETHYLDIOXANES
LGBF		FL	3				S2	30	2709	BUTYLBENZENES
LGBF		FL	3				S2	30	2710	DIPROPYL KETONE
SGAH L4BH	TU15 TE15 TE19	AT	2		VV9b	CV13 CV28	S9	60	2713	ACRIDINE

UN No.	Name and description	Class	Classification code	Packing group	Labels	Special provisions	Limited quantities	Packaging			Portable tanks and bulk containers	
								Packing instructions	Special packing provisions	Mixed packing provisions	Instructions	Special provisions
	3.1.2	2.2	2.2	2.1.1.3	5.2.2	3.3	3.4.6	4.1.4	4.1.4	4.1.10	4.2.5.2 7.3.2	4.2.5.3
(1)	(2)	(3a)	(3b)	(4)	(5)	(6)	(7)	(8)	(9a)	(9b)	(10)	(11)
2714	ZINC RESINATE	4.1	F3	III	4.1		LQ9	P002 IBC06 R001		MP11	T1	TP33
2715	ALUMINIUM RESINATE	4.1	F3	III	4.1		LQ9	P002 IBC06 R001		MP11	T1	TP33
2716	1,4-BUTYNEDIOL	6.1	T2	III	6.1		LQ9	P002 IBC08 LP02 R001	B3	MP10	T1	TP33
2717	CAMPHOR, synthetic	4.1	F1	III	4.1		LQ9	P002 IBC08 LP02 R001	B3	MP10	T1	TP33
2719	BARIUM BROMATE	5.1	OT2	II	5.1 +6.1		LQ11	P002 IBC08	B4	MP2	T3	TP33
2720	CHROMIUM NITRATE	5.1	O2	III	5.1		LQ12	P002 IBC08 LP02 R001	B3	MP10	T1	TP33
2721	COPPER CHLORATE	5.1	O2	II	5.1		LQ11	P002 IBC08	B4	MP2	T3	TP33
2722	LITHIUM NITRATE	5.1	O2	III	5.1		LQ12	P002 IBC08 LP02 R001	B3	MP10	T1	TP33
2723	MAGNESIUM CHLORATE	5.1	O2	II	5.1		LQ11	P002 IBC08	B4	MP2	T3	TP33
2724	MANGANESE NITRATE	5.1	O2	III	5.1		LQ12	P002 IBC08 LP02 R001	B3	MP10	T1	TP33
2725	NICKEL NITRATE	5.1	O2	III	5.1		LQ12	P002 IBC08 LP02 R001	B3	MP10	T1	TP33
2726	NICKEL NITRITE	5.1	O2	III	5.1		LQ12	P002 IBC08 LP02 R001	B3	MP10	T1	TP33
2727	THALLIUM NITRATE	6.1	TO2	II	6.1 +5.1		LQ18	P002 IBC06		MP10	T3	TP33
2728	ZIRCONIUM NITRATE	5.1	O2	III	5.1		LQ12	P002 IBC08 LP02 R001	B3	MP10	T1	TP33
2729	HEXACHLOROBENZENE	6.1	T2	III	6.1		LQ9	P002 IBC08 LP02 R001	B3	MP10	T1	TP33
2730	NITROANISOLES, LIQUID	6.1	T1	III	6.1	279	LQ19	P001 IBC03 LP01 R001		MP15	T4	TP1
2732	NITROBROMOBENZENES, LIQUID	6.1	T1	III	6.1		LQ19	P001 IBC03 LP01 R001		MP15	T4	TP1
2733	AMINES, FLAMMABLE, CORROSIVE, N.O.S. or POLYAMINES, FLAMMABLE, CORROSIVE, N.O.S.	3	FC	I	3 +8	274 544	LQ3	P001		MP7 MP17	T14	TP1 TP9 TP27

ADR tank		Vehicle for tank carriage	Transport category	Special provisions for carriage				Hazard identifi-cation No.	UN No.	Name and description
Tank code	Special provisions			Packages	Bulk	Loading, unloading and handling	Operation			
4.3	4.3.5, 6.8.4	9.1.1.2	1.1.3.6	7.2.4	7.3.3	7.5.11	8.5	5.3.2.3		3.1.2
(12)	(13)	(14)	(15)	(16)	(17)	(18)	(19)	(20)	(1)	(2)
SGAV		AT	3	V12	VV1			40	2714	ZINC RESINATE
SGAV		AT	3	V12	VV1			40	2715	ALUMINIUM RESINATE
SGAH L4BH	TU15 TE15 TE19	AT	2		VV9b	CV13 CV28	S9	60	2716	1,4-BUTYNEDIOL
SGAV		AT	3		VV1			40	2717	CAMPHOR, synthetic
SGAN	TU3	AT	2	V11		CV24 CV28		56	2719	BARIUM BROMATE
SGAV	TU3	AT	3		VV8	CV24		50	2720	CHROMIUM NITRATE
SGAV	TU3	AT	2	V11	VV8	CV24		50	2721	COPPER CHLORATE
SGAV	TU3	AT	3		VV8	CV24		50	2722	LITHIUM NITRATE
SGAV	TU3	AT	2	V11	VV8	CV24		50	2723	MAGNESIUM CHLORATE
SGAV	TU3	AT	3		VV8	CV24		50	2724	MANGANESE NITRATE
SGAV	TU3	AT	3		VV8	CV24		50	2725	NICKEL NITRATE
SGAV	TU3	AT	3		VV8	CV24		50	2726	NICKEL NITRITE
SGAH	TU15 TE15 TE19	AT	2	V11 V12		CV13 CV28	S9 S19	65	2727	THALLIUM NITRATE
SGAV	TU3	AT	3		VV8	CV24		50	2728	ZIRCONIUM NITRATE
SGAH	TU15 TE15 TE19	AT	2		VV9b	CV13 CV28	S9	60	2729	HEXACHLOROBENZENE
L4BH	TU15 TE15 TE19	AT	2			CV13 CV28	S9	60	2730	NITROANISOLES, LIQUID
L4BH	TU15 TE15 TE19	AT	2			CV13 CV28	S9	60	2732	NITROBROMOBENZENES, LIQUID
L10CH	TU14 TE21	FL	1				S2 S20	338	2733	AMINES, FLAMMABLE, CORROSIVE, N.O.S. or POLYAMINES, FLAMMABLE, CORROSIVE, N.O.S.

UN No.	Name and description	Class	Classification code	Packing group	Labels	Special provisions	Limited quantities	Packaging			Portable tanks and bulk containers	
								Packing instructions	Special packing provisions	Mixed packing provisions	Instructions	Special provisions
	3.1.2	2.2	2.2	2.1.1.3	5.2.2	3.3	3.4.6	4.1.4	4.1.4	4.1.10	4.2.5.2 7.3.2	4.2.5.3
(1)	(2)	(3a)	(3b)	(4)	(5)	(6)	(7)	(8)	(9a)	(9b)	(10)	(11)
2733	AMINES, FLAMMABLE, CORROSIVE, N.O.S. or POLYAMINES, FLAMMABLE, CORROSIVE, N.O.S.	3	FC	II	3 +8	274 544	LQ4	P001 IBC02		MP19	T11	TP1 TP27
2733	AMINES, FLAMMABLE, CORROSIVE, N.O.S. or POLYAMINES, FLAMMABLE, CORROSIVE, N.O.S.	3	FC	III	3 +8	274 544	LQ7	P001 IBC03 R001		MP19	T7	TP1 TP28
2734	AMINES, LIQUID, CORROSIVE, FLAMMABLE, N.O.S. or POLYAMINES, LIQUID, CORROSIVE, FLAMMABLE, N.O.S.	8	CF1	I	8 +3	274	LQ0	P001		MP8 MP17	T14	TP2 TP9 TP27
2734	AMINES, LIQUID, CORROSIVE, FLAMMABLE, N.O.S. or POLYAMINES, LIQUID, CORROSIVE, FLAMMABLE, N.O.S.	8	CF1	II	8 +3	274	LQ22	P001 IBC02		MP15	T11	TP2 TP27
2735	AMINES, LIQUID, CORROSIVE, N.O.S. or POLYAMINES, LIQUID, CORROSIVE, N.O.S.	8	C7	I	8	274	LQ0	P001		MP8 MP17	T14	TP2 TP9 TP27
2735	AMINES, LIQUID, CORROSIVE, N.O.S. or POLYAMINES, LIQUID, CORROSIVE, N.O.S.	8	C7	II	8	274	LQ22	P001 IBC02		MP15	T11	TP1 TP27
2735	AMINES, LIQUID, CORROSIVE, N.O.S. or POLYAMINES, LIQUID, CORROSIVE, N.O.S.	8	C7	III	8	274	LQ19	P001 IBC03 LP01 R001		MP15	T7	TP1 TP28
2738	N-BUTYLANILINE	6.1	T1	II	6.1		LQ17	P001 IBC02		MP15	T7	TP2
2739	BUTYRIC ANHYDRIDE	8	C3	III	8		LQ19	P001 IBC03 LP01 R001		MP15	T4	TP1
2740	n-PROPYL CHLOROFORMATE	6.1	TFC	I	6.1 +3 +8		LQ0	P602		MP8 MP17	T20	TP2
2741	BARIUM HYPOCHLORITE with more than 22% available chlorine	5.1	OT2	II	5.1 +6.1		LQ11	P002 IBC08	B4	MP2	T3	TP33
2742	CHLOROFORMATES, TOXIC, CORROSIVE, FLAMMABLE, N.O.S.	6.1	TFC	II	6.1 +3 +8	274 561	LQ17	P001 IBC01		MP15		
2743	n-BUTYL CHLOROFORMATE	6.1	TFC	II	6.1 +3 +8		LQ17	P001		MP15	T20	TP2
2744	CYCLOBUTYL CHLOROFORMATE	6.1	TFC	II	6.1 +3 +8		LQ17	P001 IBC01		MP15	T7	TP2
2745	CHLOROMETHYL CHLOROFORMATE	6.1	TC1	II	6.1 +8		LQ17	P001 IBC02		MP15	T7	TP2
2746	PHENYL CHLOROFORMATE	6.1	TC1	II	6.1 +8		LQ17	P001 IBC02		MP15	T7	TP2
2747	tert-BUTYLCYCLOHEXYL CHLOROFORMATE	6.1	T1	III	6.1		LQ19	P001 IBC03 LP01 R001		MP15	T4	TP1
2748	2-ETHYLHEXYL CHLOROFORMATE	6.1	TC1	II	6.1 +8		LQ17	P001 IBC02		MP15	T7	TP2

ADR tank		Vehicle for tank carriage	Transport category	Special provisions for carriage				Hazard identifi-cation No.	UN No.	Name and description
Tank code	Special provisions			Packages	Bulk	Loading, unloading and handling	Operation			
4.3	4.3.5, 6.8.4	9.1.1.2	1.1.3.6	7.2.4	7.3.3	7.5.11	8.5	5.3.2.3		3.1.2
(12)	(13)	(14)	(15)	(16)	(17)	(18)	(19)	(20)	(1)	(2)
L4BH	TE15	FL	2				S2 S20	338	2733	AMINES, FLAMMABLE, CORROSIVE, N.O.S. or POLYAMINES, FLAMMABLE, CORROSIVE, N.O.S.
L4BN		FL	3				S2	38	2733	AMINES, FLAMMABLE, CORROSIVE, N.O.S. or POLYAMINES, FLAMMABLE, CORROSIVE, N.O.S.
L10BH		FL	1				S2 S20	883	2734	AMINES, LIQUID, CORROSIVE, FLAMMABLE, N.O.S. or POLYAMINES, LIQUID, CORROSIVE, FLAMMABLE, N.O.S.
L4BN		FL	2				S2	83	2734	AMINES, LIQUID, CORROSIVE, FLAMMABLE, N.O.S. or POLYAMINES, LIQUID, CORROSIVE, FLAMMABLE, N.O.S.
L10BH		AT	1				S20	88	2735	AMINES, LIQUID, CORROSIVE, N.O.S. or POLYAMINES, LIQUID, CORROSIVE, N.O.S.
L4BN		AT	2					80	2735	AMINES, LIQUID, CORROSIVE, N.O.S. or POLYAMINES, LIQUID, CORROSIVE, N.O.S.
L4BN		AT	3					80	2735	AMINES, LIQUID, CORROSIVE, N.O.S. or POLYAMINES, LIQUID, CORROSIVE, N.O.S.
L4BH	TU15 TE15 TE19	AT	2			CV13 CV28	S9 S19	60	2738	N-BUTYLANILINE
L4BN		AT	3					80	2739	BUTYRIC ANHYDRIDE
L10CH	TU14 TU15 TE19 TE21	FL	1			CV1 CV13 CV28	S2 S9 S17	668	2740	n-PROPYL CHLOROFORMATE
SGAN	TU3	AT	2	V11		CV24 CV28		56	2741	BARIUM HYPOCHLORITE with more than 22% available chlorine
L4BH	TU15 TE15 TE19	FL	2			CV13 CV28	S2 S9 S19	638	2742	CHLOROFORMATES, TOXIC, CORROSIVE, FLAMMABLE, N.O.S.
L4BH	TU15 TE15 TE19	FL	2			CV13 CV28	S2 S9 S19	638	2743	n-BUTYL CHLOROFORMATE
L4BH	TU15 TE15 TE19	FL	2			CV13 CV28	S2 S9 S19	638	2744	CYCLOBUTYL CHLOROFORMATE
L4BH	TU15 TE15 TE19	AT	2			CV13 CV28	S9 S19	68	2745	CHLOROMETHYL CHLOROFORMATE
L4BH	TU15 TE15 TE19	AT	2			CV13 CV28	S9 S19	68	2746	PHENYL CHLOROFORMATE
L4BH	TU15 TE15 TE19	AT	2			CV13 CV28	S9	60	2747	tert-BUTYLCYCLOHEXYL CHLOROFORMATE
L4BH	TU15 TE15 TE19	AT	2			CV13 CV28	S9 S19	68	2748	2-ETHYLHEXYL CHLOROFORMATE

UN No.	Name and description	Class	Classification code	Packing group	Labels	Special provisions	Limited quantities	Packaging			Portable tanks and bulk containers	
								Packing instructions	Special packing provisions	Mixed packing provisions	Instructions	Special provisions
	3.1.2	2.2	2.2	2.1.1.3	5.2.2	3.3	3.4.6	4.1.4	4.1.4	4.1.10	4.2.5.2 7.3.2	4.2.5.3
(1)	(2)	(3a)	(3b)	(4)	(5)	(6)	(7)	(8)	(9a)	(9b)	(10)	(11)
2749	TETRAMETHYLSILANE	3	F1	I	3		LQ3	P001		MP7 MP12	T14	TP2
2750	1,3-DICHLOROPROPANOL-2	6.1	T1	II	6.1		LQ17	P001 IBC02		MP15	T7	TP2
2751	DIETHYLTHIO-PHOSPHORYL CHLORIDE	8	C3	II	8		LQ22	P001 IBC02		MP15	T7	TP2
2752	1,2-EPOXY-3-ETHOXYPROPANE	3	F1	III	3		LQ7	P001 IBC03 LP01 R001		MP19	T2	TP1
2753	N-ETHYLBENZYL-TOLUIDINES, LIQUID	6.1	T1	III	6.1		LQ19	P001 IBC03 LP01 R001		MP15	T7	TP1
2754	N-ETHYLTOLUIDINES	6.1	T1	II	6.1		LQ17	P001 IBC02		MP15	T7	TP2
2757	CARBAMATE PESTICIDE, SOLID, TOXIC	6.1	T7	I	6.1	61 648	LQ0	P002 IBC07		MP18	T6	TP33
2757	CARBAMATE PESTICIDE, SOLID, TOXIC	6.1	T7	II	6.1	61 648	LQ18	P002 IBC08	B4	MP10	T3	TP33
2757	CARBAMATE PESTICIDE, SOLID, TOXIC	6.1	T7	III	6.1	61 648	LQ9	P002 IBC08 LP02 R001	B3	MP10	T1	TP33
2758	CARBAMATE PESTICIDE, LIQUID, FLAMMABLE, TOXIC, flash-point less than 23 °C	3	FT2	I	3 +6.1	61	LQ3	P001		MP7 MP17	T14	TP2 TP9 TP27
2758	CARBAMATE PESTICIDE, LIQUID, FLAMMABLE, TOXIC, flash-point less than 23 °C	3	FT2	II	3 +6.1	61	LQ4	P001 IBC02 R001		MP19	T11	TP2 TP27
2759	ARSENICAL PESTICIDE, SOLID, TOXIC	6.1	T7	I	6.1	61 648	LQ0	P002 IBC07		MP18	T6	TP33
2759	ARSENICAL PESTICIDE, SOLID, TOXIC	6.1	T7	II	6.1	61 648	LQ18	P002 IBC08	B4	MP10	T3	TP33
2759	ARSENICAL PESTICIDE, SOLID, TOXIC	6.1	T7	III	6.1	61 648	LQ9	P002 IBC08 LP02 R001	B3	MP10	T1	TP33
2760	ARSENICAL PESTICIDE, LIQUID, FLAMMABLE, TOXIC, flash-point less than 23 °C	3	FT2	I	3 +6.1	61	LQ3	P001		MP7 MP17	T14	TP2 TP9 TP27
2760	ARSENICAL PESTICIDE, LIQUID, FLAMMABLE, TOXIC, flash-point less than 23 °C	3	FT2	II	3 +6.1	61	LQ4	P001 IBC02 R001		MP19	T11	TP2 TP27
2761	ORGANOCHLORINE PESTICIDE, SOLID, TOXIC	6.1	T7	I	6.1	61 648	LQ0	P002 IBC07		MP18	T6	TP33
2761	ORGANOCHLORINE PESTICIDE, SOLID, TOXIC	6.1	T7	II	6.1	61 648	LQ18	P002 IBC08	B4	MP10	T3	TP33
2761	ORGANOCHLORINE PESTICIDE, SOLID, TOXIC	6.1	T7	III	6.1	61 648	LQ9	P002 IBC08 LP02 R001	B3	MP10	T1	TP33

ADR tank		Vehicle for tank carriage	Transport category	Special provisions for carriage				Hazard identification No.	UN No.	Name and description
Tank code	Special provisions			Packages	Bulk	Loading, unloading and handling	Operation			
4.3	4.3.5, 6.8.4	9.1.1.2	1.1.3.6	7.2.4	7.3.3	7.5.11	8.5	5.3.2.3		3.1.2
(12)	(13)	(14)	(15)	(16)	(17)	(18)	(19)	(20)	(1)	(2)
L4BN		FL	1				S2 S20	33	2749	TETRAMETHYLSILANE
L4BH	TU15 TE15 TE19	AT	2			CV13 CV28	S9 S19	60	2750	1,3-DICHLOROPROPANOL-2
L4BN		AT	2					80	2751	DIETHYLTHIO-PHOSPHORYL CHLORIDE
LGBF		FL	3				S2	30	2752	1,2-EPOXY-3-ETHOXYPROPANE
L4BH	TU15 TE15 TE19	AT	2			CV13 CV28	S9	60	2753	N-ETHYLBENZYL-TOLUIDINES, LIQUID
L4BH	TU15 TE15 TE19	AT	2			CV13 CV28	S9 S19	60	2754	N-ETHYLTOLUIDINES
S10AH L10CH	TU14 TU15 TE19 TE21	AT	1	V10 V12		CV1 CV13 CV28	S9 S17	66	2757	CARBAMATE PESTICIDE, SOLID, TOXIC
SGAH L4BH	TU15 TE15 TE19	AT	2	V11		CV13 CV28	S9 S19	60	2757	CARBAMATE PESTICIDE, SOLID, TOXIC
SGAH L4BH	TU15 TE15 TE19	AT	2		VV9b	CV13 CV28	S9	60	2757	CARBAMATE PESTICIDE, SOLID, TOXIC
L10CH	TU14 TU15 TE21	FL	1			CV13 CV28	S2 S19	336	2758	CARBAMATE PESTICIDE, LIQUID, FLAMMABLE, TOXIC, flash-point less than 23 °C
L4BH	TU15 TE15	FL	2			CV13 CV28	S2 S19	336	2758	CARBAMATE PESTICIDE, LIQUID, FLAMMABLE, TOXIC, flash-point less than 23 °C
S10AH L10CH	TU14 TU15 TE19 TE21	AT	1	V10 V12		CV1 CV13 CV28	S9 S17	66	2759	ARSENICAL PESTICIDE, SOLID, TOXIC
SGAH L4BH	TU15 TE15 TE19	AT	2	V11		CV13 CV28	S9 S19	60	2759	ARSENICAL PESTICIDE, SOLID, TOXIC
SGAH L4BH	TU15 TE15 TE19	AT	2		VV9b	CV13 CV28	S9	60	2759	ARSENICAL PESTICIDE, SOLID, TOXIC
L10CH	TU14 TU15 TE21	FL	1			CV13 CV28	S2 S19	336	2760	ARSENICAL PESTICIDE, LIQUID, FLAMMABLE, TOXIC, flash-point less than 23 °C
L4BH	TU15 TE15	FL	2			CV13 CV28	S2 S19	336	2760	ARSENICAL PESTICIDE, LIQUID, FLAMMABLE, TOXIC, flash-point less than 23 °C
S10AH L10CH	TU14 TU15 TE19 TE21	AT	1	V10 V12		CV1 CV13 CV28	S9 S17	66	2761	ORGANOCHLORINE PESTICIDE, SOLID, TOXIC
SGAH L4BH	TU15 TE15 TE19	AT	2	V11		CV13 CV28	S9 S19	60	2761	ORGANOCHLORINE PESTICIDE, SOLID, TOXIC
SGAH L4BH	TU15 TE15 TE19	AT	2		VV9b	CV13 CV28	S9	60	2761	ORGANOCHLORINE PESTICIDE, SOLID, TOXIC

UN No.	Name and description	Class	Classification code	Packing group	Labels	Special provisions	Limited quantities	Packaging			Portable tanks and bulk containers	
								Packing instructions	Special packing provisions	Mixed packing provisions	Instructions	Special provisions
	3.1.2	2.2	2.2	2.1.1.3	5.2.2	3.3	3.4.6	4.1.4	4.1.4	4.1.10	4.2.5.2 7.3.2	4.2.5.3
(1)	(2)	(3a)	(3b)	(4)	(5)	(6)	(7)	(8)	(9a)	(9b)	(10)	(11)
2762	ORGANOCHLORINE PESTICIDE, LIQUID, FLAMMABLE, TOXIC, flash-point less than 23 °C	3	FT2	I	3 +6.1	61	LQ3	P001		MP7 MP17	T14	TP2 TP9 TP27
2762	ORGANOCHLORINE PESTICIDE, LIQUID, FLAMMABLE, TOXIC, flash-point less than 23 °C	3	FT2	II	3 +6.1	61	LQ4	P001 IBC02 R001		MP19	T11	TP2 TP27
2763	TRIAZINE PESTICIDE, SOLID, TOXIC	6.1	T7	I	6.1	61 648	LQ0	P002 IBC07		MP18	T6	TP33
2763	TRIAZINE PESTICIDE, SOLID, TOXIC	6.1	T7	II	6.1	61 648	LQ18	P002 IBC08	B4	MP10	T3	TP33
2763	TRIAZINE PESTICIDE, SOLID, TOXIC	6.1	T7	III	6.1	61 648	LQ9	P002 IBC08 R001	B3	MP10	T1	TP33
2764	TRIAZINE PESTICIDE, LIQUID, FLAMMABLE, TOXIC, flash-point less than 23 °C	3	FT2	I	3 +6.1	61	LQ3	P001		MP7 MP17	T14	TP2 TP9 TP27
2764	TRIAZINE PESTICIDE, LIQUID, FLAMMABLE, TOXIC, flash-point less than 23 °C	3	FT2	II	3 +6.1	61	LQ4	P001 IBC02 R001		MP19	T11	TP2 TP27
2771	THIOCARBAMATE PESTICIDE, SOLID, TOXIC	6.1	T7	I	6.1	61 648	LQ0	P002 IBC07		MP18	T6	TP33
2771	THIOCARBAMATE PESTICIDE, SOLID, TOXIC	6.1	T7	II	6.1	61 648	LQ18	P002 IBC08	B4	MP10	T3	TP33
2771	THIOCARBAMATE PESTICIDE, SOLID, TOXIC	6.1	T7	III	6.1	61 648	LQ9	P002 IBC08 LP02 R001	B3	MP10	T1	TP33
2772	THIOCARBAMATE PESTICIDE, LIQUID, FLAMMABLE, TOXIC, flash-point less than 23 °C	3	FT2	I	3 +6.1	61	LQ3	P001		MP7 MP17	T14	TP2 TP9 TP27
2772	THIOCARBAMATE PESTICIDE, LIQUID, FLAMMABLE, TOXIC, flash-point less than 23 °C	3	FT2	II	3 +6.1	61	LQ4	P001 IBC02 R001		MP19	T11	TP2 TP27
2775	COPPER BASED PESTICIDE, SOLID, TOXIC	6.1	T7	I	6.1	61 648	LQ0	P002 IBC07		MP18	T6	TP33
2775	COPPER BASED PESTICIDE, SOLID, TOXIC	6.1	T7	II	6.1	61 648	LQ18	P002 IBC08	B4	MP10	T3	TP33
2775	COPPER BASED PESTICIDE, SOLID, TOXIC	6.1	T7	III	6.1	61 648	LQ9	P002 IBC08 LP02 R001	B3	MP10	T1	TP33
2776	COPPER BASED PESTICIDE, LIQUID, FLAMMABLE, TOXIC, flash-point less than 23 °C	3	FT2	I	3 +6.1	61	LQ3	P001		MP7 MP17	T14	TP2 TP9 TP27
2776	COPPER BASED PESTICIDE, LIQUID, FLAMMABLE, TOXIC, flash-point less than 23 °C	3	FT2	II	3 +6.1	61	LQ4	P001 IBC02 R001		MP19	T11	TP2 TP27
2777	MERCURY BASED PESTICIDE, SOLID, TOXIC	6.1	T7	I	6.1	61 648	LQ0	P002 IBC07		MP18	T6	TP33

ADR tank		Vehicle for tank carriage	Transport category	Special provisions for carriage				Hazard identifi-cation No.	UN No.	Name and description
Tank code	Special provisions			Packages	Bulk	Loading, unloading and handling	Operation			
4.3	4.3.5, 6.8.4	9.1.1.2	1.1.3.6	7.2.4	7.3.3	7.5.11	8.5	5.3.2.3		3.1.2
(12)	(13)	(14)	(15)	(16)	(17)	(18)	(19)	(20)	(1)	(2)
L10CH	TU14 TU15 TE21	FL	1			CV13 CV28	S2 S19	336	2762	ORGANOCHLORINE PESTICIDE, LIQUID, FLAMMABLE, TOXIC, flash-point less than 23 °C
L4BH	TU15 TE15	FL	2			CV13 CV28	S2 S19	336	2762	ORGANOCHLORINE PESTICIDE, LIQUID, FLAMMABLE, TOXIC, flash-point less than 23 °C
S10AH L10CH	TU14 TU15 TE19 TE21	AT	1	V10 V12		CV1 CV13 CV28	S9 S17	66	2763	TRIAZINE PESTICIDE, SOLID, TOXIC
SGAH L4BH	TU15 TE15 TE19	AT	2	V11		CV13 CV28	S9 S19	60	2763	TRIAZINE PESTICIDE, SOLID, TOXIC
SGAH L4BH	TU15 TE15 TE19	AT	2		VV9b	CV13 CV28	S9	60	2763	TRIAZINE PESTICIDE, SOLID, TOXIC
L10CH	TU14 TU15 TE21	FL	1			CV13 CV28	S2 S19	336	2764	TRIAZINE PESTICIDE, LIQUID, FLAMMABLE, TOXIC, flash-point less than 23 °C
L4BH	TU15 TE15	FL	2			CV13 CV28	S2 S19	336	2764	TRIAZINE PESTICIDE, LIQUID, FLAMMABLE, TOXIC, flash-point less than 23 °C
S10AH L10CH	TU14 TU15 TE19 TE21	AT	1	V10 V12		CV1 CV13 CV28	S9 S17	66	2771	THIOCARBAMATE PESTICIDE, SOLID, TOXIC
SGAH L4BH	TU15 TE15 TE19	AT	2	V11		CV13 CV28	S9 S19	60	2771	THIOCARBAMATE PESTICIDE, SOLID, TOXIC
SGAH L4BH	TU15 TE15 TE19	AT	2		VV9b	CV13 CV28	S9	60	2771	THIOCARBAMATE PESTICIDE, SOLID, TOXIC
L10CH	TU14 TU15 TE21	FL	1			CV13 CV28	S2 S19	336	2772	THIOCARBAMATE PESTICIDE, LIQUID, FLAMMABLE, TOXIC, flash-point less than 23 °C
L4BH	TU15 TE15	FL	2			CV13 CV28	S2 S19	336	2772	THIOCARBAMATE PESTICIDE, LIQUID, FLAMMABLE, TOXIC, flash-point less than 23 °C
S10AH L10CH	TU14 TU15 TE19 TE21	AT	1	V10 V12		CV1 CV13 CV28	S9 S17	66	2775	COPPER BASED PESTICIDE, SOLID, TOXIC
SGAH L4BH	TU15 TE15 TE19	AT	2	V11		CV13 CV28	S9 S19	60	2775	COPPER BASED PESTICIDE, SOLID, TOXIC
SGAH L4BH	TU15 TE15 TE19	AT	2		VV9b	CV13 CV28	S9	60	2775	COPPER BASED PESTICIDE, SOLID, TOXIC
L10CH	TU14 TU15 TE21	FL	1			CV13 CV28	S2 S19	336	2776	COPPER BASED PESTICIDE, LIQUID, FLAMMABLE, TOXIC, flash-point less than 23 °C
L4BH	TU15 TE15	FL	2			CV13 CV28	S2 S19	336	2776	COPPER BASED PESTICIDE, LIQUID, FLAMMABLE, TOXIC, flash-point less than 23 °C
S10AH L10CH	TU14 TU15 TE19 TE21	AT	1	V10 V12		CV1 CV13 CV28	S9 S17	66	2777	MERCURY BASED PESTICIDE, SOLID, TOXIC

UN No.	Name and description	Class	Classification code	Packing group	Labels	Special provisions	Limited quantities	Packaging			Portable tanks and bulk containers	
								Packing instructions	Special packing provisions	Mixed packing provisions	Instructions	Special provisions
	3.1.2	2.2	2.2	2.1.1.3	5.2.2	3.3	3.4.6	4.1.4	4.1.4	4.1.10	4.2.5.2 7.3.2	4.2.5.3
(1)	(2)	(3a)	(3b)	(4)	(5)	(6)	(7)	(8)	(9a)	(9b)	(10)	(11)
2777	MERCURY BASED PESTICIDE, SOLID, TOXIC	6.1	T7	II	6.1	61 648	LQ18	P002 IBC08	B4	MP10	T3	TP33
2777	MERCURY BASED PESTICIDE, SOLID, TOXIC	6.1	T7	III	6.1	61 648	LQ9	P002 IBC08 LP02 R001	B3	MP10	T1	TP33
2778	MERCURY BASED PESTICIDE, LIQUID, FLAMMABLE, TOXIC, flash-point less than 23 °C	3	FT2	I	3 +6.1	61	LQ3	P001		MP7 MP17	T14	TP2 TP9 TP27
2778	MERCURY BASED PESTICIDE, LIQUID, FLAMMABLE, TOXIC, flash-point less than 23 °C	3	FT2	II	3 +6.1	61	LQ4	P001 IBC02 R001		MP19	T11	TP2 TP27
2779	SUBSTITUTED NITROPHENOL PESTICIDE, SOLID, TOXIC	6.1	T7	I	6.1	61 648	LQ0	P002 IBC07		MP18	T6	TP33
2779	SUBSTITUTED NITROPHENOL PESTICIDE, SOLID, TOXIC	6.1	T7	II	6.1	61 648	LQ18	P002 IBC08	B4	MP10	T3	TP33
2779	SUBSTITUTED NITROPHENOL PESTICIDE, SOLID, TOXIC	6.1	T7	III	6.1	61 648	LQ9	P002 IBC08 LP02 R001	B3	MP10	T1	TP33
2780	SUBSTITUTED NITROPHENOL PESTICIDE, LIQUID, FLAMMABLE, TOXIC, flash-point less than 23 °C	3	FT2	I	3 +6.1	61	LQ3	P001		MP7 MP17	T14	TP2 TP9 TP27
2780	SUBSTITUTED NITROPHENOL PESTICIDE, LIQUID, FLAMMABLE, TOXIC, flash-point less than 23 °C	3	FT2	II	3 +6.1	61	LQ4	P001 IBC02 R001		MP19	T11	TP2 TP27
2781	BIPYRIDILIUM PESTICIDE, SOLID, TOXIC	6.1	T7	I	6.1	61 648	LQ0	P002 IBC07		MP18	T6	TP33
2781	BIPYRIDILIUM PESTICIDE, SOLID, TOXIC	6.1	T7	II	6.1	61 648	LQ18	P002 IBC08	B4	MP10	T3	TP33
2781	BIPYRIDILIUM PESTICIDE, SOLID, TOXIC	6.1	T7	III	6.1	61 648	LQ9	P002 IBC08 LP02 R001	B3	MP10	T1	TP33
2782	BIPYRIDILIUM PESTICIDE, LIQUID, FLAMMABLE, TOXIC, flash-point less than 23 °C	3	FT2	I	3 +6.1	61	LQ3	P001		MP7 MP17	T14	TP2 TP9 TP27
2782	BIPYRIDILIUM PESTICIDE, LIQUID, FLAMMABLE, TOXIC, flash-point less than 23 °C	3	FT2	II	3 +6.1	61	LQ4	P001 IBC02 R001		MP19	T11	TP2 TP27
2783	ORGANOPHOSPHORUS PESTICIDE, SOLID, TOXIC	6.1	T7	I	6.1	61 648	LQ0	P002 IBC07		MP18	T6	TP33
2783	ORGANOPHOSPHORUS PESTICIDE, SOLID, TOXIC	6.1	T7	II	6.1	61 648	LQ18	P002 IBC08	B4	MP10	T3	TP33

ADR tank		Vehicle for tank carriage	Transport category	Special provisions for carriage				Hazard identifi-cation No.	UN No.	Name and description
Tank code	Special provisions			Packages	Bulk	Loading, unloading and handling	Operation			
4.3	4.3.5, 6.8.4	9.1.1.2	1.1.3.6	7.2.4	7.3.3	7.5.11	8.5	5.3.2.3		3.1.2
(12)	(13)	(14)	(15)	(16)	(17)	(18)	(19)	(20)	(1)	(2)
SGAH L4BH	TU15 TE15 TE19	AT	2	V11		CV13 CV28	S9 S19	60	2777	MERCURY BASED PESTICIDE, SOLID, TOXIC
SGAH L4BH	TU15 TE15 TE19	AT	2		VV9b	CV13 CV28	S9	60	2777	MERCURY BASED PESTICIDE, SOLID, TOXIC
L10CH	TU14 TU15 TE21	FL	1			CV13 CV28	S2 S19	336	2778	MERCURY BASED PESTICIDE, LIQUID, FLAMMABLE, TOXIC, flash-point less than 23 °C
L4BH	TU15 TE15	FL	2			CV13 CV28	S2 S19	336	2778	MERCURY BASED PESTICIDE, LIQUID, FLAMMABLE, TOXIC, flash-point less than 23 °C
S10AH L10CH	TU14 TU15 TE19 TE21	AT	1	V10 V12		CV1 CV13 CV28	S9 S17	66	2779	SUBSTITUTED NITROPHENOL PESTICIDE, SOLID, TOXIC
SGAH L4BH	TU15 TE15 TE19	AT	2	V11		CV13 CV28	S9 S19	60	2779	SUBSTITUTED NITROPHENOL PESTICIDE, SOLID, TOXIC
SGAH L4BH	TU15 TE15 TE19	AT	2		VV9b	CV13 CV28	S9	60	2779	SUBSTITUTED NITROPHENOL PESTICIDE, SOLID, TOXIC
L10CH	TU14 TU15 TE21	FL	1			CV13 CV28	S2 S19	336	2780	SUBSTITUTED NITROPHENOL PESTICIDE, LIQUID, FLAMMABLE, TOXIC, flash-point less than 23 °C
L4BH	TU15 TE15	FL	2			CV13 CV28	S2 S19	336	2780	SUBSTITUTED NITROPHENOL PESTICIDE, LIQUID, FLAMMABLE, TOXIC, flash-point less than 23 °C
S10AH L10CH	TU14 TU15 TE19 TE21	AT	1	V10 V12		CV1 CV13 CV28	S9 S17	66	2781	BIPYRIDILIUM PESTICIDE, SOLID, TOXIC
SGAH L4BH	TU15 TE15 TE19	AT	2	V11		CV13 CV28	S9 S19	60	2781	BIPYRIDILIUM PESTICIDE, SOLID, TOXIC
SGAH L4BH	TU15 TE15 TE19	AT	2		VV9b	CV13 CV28	S9	60	2781	BIPYRIDILIUM PESTICIDE, SOLID, TOXIC
L10CH	TU14 TU15 TE21	FL	1			CV13 CV28	S2 S19	336	2782	BIPYRIDILIUM PESTICIDE, LIQUID, FLAMMABLE, TOXIC, flash-point less than 23 °C
L4BH	TU15 TE15	FL	2			CV13 CV28	S2 S19	336	2782	BIPYRIDILIUM PESTICIDE, LIQUID, FLAMMABLE, TOXIC, flash-point less than 23 °C
S10AH L10CH	TU14 TU15 TE19 TE21	AT	1	V10 V12		CV1 CV13 CV28	S9 S17	66	2783	ORGANOPHOSPHORUS PESTICIDE, SOLID, TOXIC
SGAH L4BH	TU15 TE15 TE19	AT	2	V11		CV13 CV28	S9 S19	60	2783	ORGANOPHOSPHORUS PESTICIDE, SOLID, TOXIC

UN No.	Name and description	Class	Classification code	Packing group	Labels	Special provisions	Limited quantities	Packaging			Portable tanks and bulk containers	
								Packing instructions	Special packing provisions	Mixed packing provisions	Instructions	Special provisions
	3.1.2	2.2	2.2	2.1.1.3	5.2.2	3.3	3.4.6	4.1.4	4.1.4	4.1.10	4.2.5.2 7.3.2	4.2.5.3
(1)	(2)	(3a)	(3b)	(4)	(5)	(6)	(7)	(8)	(9a)	(9b)	(10)	(11)
2783	ORGANOPHOSPHORUS PESTICIDE, SOLID, TOXIC	6.1	T7	III	6.1	61 648	LQ9	P002 IBC08 LP02 R001	B3	MP10	T1	TP33
2784	ORGANOPHOSPHORUS PESTICIDE, LIQUID, FLAMMABLE, TOXIC, flash-point less than 23 °C	3	FT2	I	3 +6.1	61	LQ3	P001		MP7 MP17	T14	TP2 TP9 TP27
2784	ORGANOPHOSPHORUS PESTICIDE, LIQUID, FLAMMABLE, TOXIC, flash-point less than 23 °C	3	FT2	II	3 +6.1	61	LQ4	P001 IBC02 R001		MP19	T11	TP2 TP27
2785	4-THIAPENTANAL	6.1	T1	III	6.1		LQ19	P001 IBC03 LP01 R001		MP15	T4	TP1
2786	ORGANOTIN PESTICIDE, SOLID, TOXIC	6.1	T7	I	6.1	61 648	LQ0	P002 IBC07		MP18	T6	TP33
2786	ORGANOTIN PESTICIDE, SOLID, TOXIC	6.1	T7	II	6.1	61 648	LQ18	P002 IBC08	B4	MP10	T3	TP33
2786	ORGANOTIN PESTICIDE, SOLID, TOXIC	6.1	T7	III	6.1	61 648	LQ9	P002 IBC08 LP02 R001	B3	MP10	T1	TP33
2787	ORGANOTIN PESTICIDE, LIQUID, FLAMMABLE, TOXIC, flash-point less than 23 °C	3	FT2	I	3 +6.1	61	LQ3	P001		MP7 MP17	T14	TP2 TP9 TP27
2787	ORGANOTIN PESTICIDE, LIQUID, FLAMMABLE, TOXIC, flash-point less than 23 °C	3	FT2	II	3 +6.1	61	LQ4	P001 IBC02 R001		MP19	T11	TP2 TP27
2788	ORGANOTIN COMPOUND, LIQUID, N.O.S.	6.1	T3	I	6.1	43 274	LQ0	P001		MP8 MP17	T14	TP2 TP9 TP27
2788	ORGANOTIN COMPOUND, LIQUID, N.O.S.	6.1	T3	II	6.1	43 274	LQ17	P001 IBC02		MP15	T11	TP2 TP27
2788	ORGANOTIN COMPOUND, LIQUID, N.O.S.	6.1	T3	III	6.1	43 274	LQ19	P001 IBC03 LP01 R001		MP15	T7	TP2 TP28
2789	ACETIC ACID, GLACIAL or ACETIC ACID SOLUTION, more than 80% acid, by mass	8	CF1	II	8 +3		LQ22	P001 IBC02		MP15	T7	TP2
2790	ACETIC ACID SOLUTION, not less than 50% but not more than 80% acid, by mass	8	C3	II	8		LQ22	P001 IBC02		MP15	T7	TP2
2790	ACETIC ACID SOLUTION, more than 10% and less than 50% acid, by mass	8	C3	III	8	597 647	LQ19	P001 IBC03 LP01 R001		MP15	T4	TP1
2793	FERROUS METAL BORINGS, SHAVINGS, TURNINGS or CUTTINGS in a form liable to self-heating	4.2	S4	III	4.2	592	LQ0	P003 IBC08 LP02 R001	PP20 B3 B6	MP14		
2794	BATTERIES, WET, FILLED WITH ACID, electric storage	8	C11		8	295 598	LQ0	P801 P801a				

ADR tank		Vehicle for tank carriage	Transport category	Special provisions for carriage				Hazard identifi-cation No.	UN No.	Name and description
Tank code	Special provisions			Packages	Bulk	Loading, unloading and handling	Operation			
4.3	4.3.5, 6.8.4	9.1.1.2	1.1.3.6	7.2.4	7.3.3	7.5.11	8.5	5.3.2.3		3.1.2
(12)	(13)	(14)	(15)	(16)	(17)	(18)	(19)	(20)	(1)	(2)
SGAH L4BH	TU15 TE15 TE19	AT	2		VV9b	CV13 CV28	S9	60	2783	ORGANOPHOSPHORUS PESTICIDE, SOLID, TOXIC
L10CH	TU14 TU15 TE21	FL	1			CV13 CV28	S2 S19	336	2784	ORGANOPHOSPHORUS PESTICIDE, LIQUID, FLAMMABLE, TOXIC, flash-point less than 23 °C
L4BH	TU15 TE15	FL	2			CV13 CV28	S2 S19	336	2784	ORGANOPHOSPHORUS PESTICIDE, LIQUID, FLAMMABLE, TOXIC, flash-point less than 23 °C
L4BH	TU15 TE15 TE19	AT	2			CV13 CV28	S9	60	2785	4-THIAPENTANAL
S10AH L10CH	TU14 TU15 TE19 TE21	AT	1	V10 V12		CV1 CV13 CV28	S9 S17	66	2786	ORGANOTIN PESTICIDE, SOLID, TOXIC
SGAH L4BH	TU15 TE15 TE19	AT	2	V11		CV13 CV28	S9 S19	60	2786	ORGANOTIN PESTICIDE, SOLID, TOXIC
SGAH L4BH	TU15 TE15 TE19	AT	2		VV9b	CV13 CV28	S9	60	2786	ORGANOTIN PESTICIDE, SOLID, TOXIC
L10CH	TU14 TU15 TE21	FL	1			CV13 CV28	S2 S19	336	2787	ORGANOTIN PESTICIDE, LIQUID, FLAMMABLE, TOXIC, flash-point less than 23 °C
L4BH	TU15 TE15	FL	2			CV13 CV28	S2 S19	336	2787	ORGANOTIN PESTICIDE, LIQUID, FLAMMABLE, TOXIC, flash-point less than 23 °C
L10CH	TU14 TU15 TE19 TE21	AT	1			CV1 CV13 CV28	S9 S17	66	2788	ORGANOTIN COMPOUND, LIQUID, N.O.S.
L4BH	TU15 TE15 TE19	AT	2			CV13 CV28	S9 S19	60	2788	ORGANOTIN COMPOUND, LIQUID, N.O.S.
L4BH	TU15 TE15 TE19	AT	2			CV13 CV28	S9	60	2788	ORGANOTIN COMPOUND, LIQUID, N.O.S.
L4BN		FL	2				S2	83	2789	ACETIC ACID, GLACIAL or ACETIC ACID SOLUTION, more than 80% acid, by mass
L4BN		AT	2					80	2790	ACETIC ACID SOLUTION, not less than 50% but not more than 80% acid, by mass
L4BN		AT	3					80	2790	ACETIC ACID SOLUTION, more than 10% and less than 50% acid, by mass
			3	V1	VV4			40	2793	FERROUS METAL BORINGS, SHAVINGS, TURNINGS or CUTTINGS in a form liable to self-heating
			3		VV14			80	2794	BATTERIES, WET, FILLED WITH ACID, electric storage

UN No.	Name and description	Class	Classification code	Packing group	Labels	Special provisions	Limited quantities	Packaging			Portable tanks and bulk containers	
								Packing instructions	Special packing provisions	Mixed packing provisions	Instructions	Special provisions
	3.1.2	2.2	2.2	2.1.1.3	5.2.2	3.3	3.4.6	4.1.4	4.1.4	4.1.10	4.2.5.2 7.3.2	4.2.5.3
(1)	(2)	(3a)	(3b)	(4)	(5)	(6)	(7)	(8)	(9a)	(9b)	(10)	(11)
2795	BATTERIES, WET, FILLED WITH ALKALI, electric storage	8	C11		8	295 598	LQ0	P801 P801a				
2796	SULPHURIC ACID with not more than 51% acid or BATTERY FLUID, ACID	8	C1	II	8		LQ22	P001 IBC02		MP15	T8	TP2 TP12
2797	BATTERY FLUID, ALKALI	8	C5	II	8		LQ22	P001 IBC02		MP15	T7	TP2 TP28
2798	PHENYLPHOSPHORUS DICHLORIDE	8	C3	II	8		LQ22	P001 IBC02		MP15	T7	TP2
2799	PHENYLPHOSPHORUS THIODICHLORIDE	8	C3	II	8		LQ22	P001 IBC02		MP15	T7	TP2
2800	BATTERIES, WET, NON-SPILLABLE, electric storage	8	C11		8	238 295 598	LQ0	P003 P801a	PP16			
2801	DYE, LIQUID, CORROSIVE, N.O.S. or DYE INTERMEDIATE, LIQUID, CORROSIVE, N.O.S.	8	C9	I	8	274	LQ0	P001		MP8 MP17	T14	TP2 TP9 TP27
2801	DYE, LIQUID, CORROSIVE, N.O.S. or DYE INTERMEDIATE, LIQUID, CORROSIVE, N.O.S.	8	C9	II	8	274	LQ22	P001 IBC02		MP15	T11	TP2 TP27
2801	DYE, LIQUID, CORROSIVE, N.O.S. or DYE INTERMEDIATE, LIQUID, CORROSIVE, N.O.S.	8	C9	III	8	274	LQ19	P001 IBC03 LP01 R001		MP15	T7	TP1 TP28
2802	COPPER CHLORIDE	8	C2	III	8		LQ24	P002 IBC08 LP02 R001	B3	MP10	T1	TP33
2803	GALLIUM	8	C10	III	8		LQ24	P800	PP41	MP10		
2805	LITHIUM HYDRIDE, FUSED SOLID	4.3	W2	II	4.3		LQ11	P410 IBC04	PP40	MP14	T3	TP33
2806	LITHIUM NITRIDE	4.3	W2	I	4.3		LQ0	P403 IBC04		MP2		
2807	Magnetized material	9	M11	NOT SUBJECT TO ADR								
2809	MERCURY	8	C9	III	8	599	LQ19	P800		MP15		
2810	TOXIC LIQUID, ORGANIC, N.O.S.	6.1	T1	I	6.1	274 315 614	LQ0	P001		MP8 MP17	T14	TP2 TP9 TP27
2810	TOXIC LIQUID, ORGANIC, N.O.S.	6.1	T1	II	6.1	274 614	LQ17	P001 IBC02		MP15	T11	TP2 TP27
2810	TOXIC LIQUID, ORGANIC, N.O.S.	6.1	T1	III	6.1	274 614	LQ19	P001 IBC03 LP01 R001		MP15	T7	TP1 TP28
2811	TOXIC SOLID, ORGANIC, N.O.S.	6.1	T2	I	6.1	274 614	LQ0	P002 IBC07		MP18	T6	TP9 TP33
2811	TOXIC SOLID, ORGANIC, N.O.S.	6.1	T2	II	6.1	274 614	LQ18	P002 IBC08	B4	MP10	T3	TP33
2811	TOXIC SOLID, ORGANIC, N.O.S.	6.1	T2	III	6.1	274 614	LQ9	P002 IBC08 LP02 R001	B3	MP10	T1	TP33
2812	Sodium aluminate, solid	8	C6	NOT SUBJECT TO ADR								
2813	WATER-REACTIVE SOLID, N.O.S.	4.3	W2	I	4.3	274	LQ0	P403 IBC99	PP83	MP2		

ADR tank		Vehicle for tank carriage	Transport category	Special provisions for carriage				Hazard identifi-cation No.	UN No.	Name and description
Tank code	Special provisions			Packages	Bulk	Loading, unloading and handling	Operation			
4.3	4.3.5, 6.8.4	9.1.1.2	1.1.3.6	7.2.4	7.3.3	7.5.11	8.5	5.3.2.3		3.1.2
(12)	(13)	(14)	(15)	(16)	(17)	(18)	(19)	(20)	(1)	(2)
			3		VV14			80	2795	BATTERIES, WET, FILLED WITH ALKALI, electric storage
L4BN		AT	2					80	2796	SULPHURIC ACID with not more than 51% acid or BATTERY FLUID, ACID
L4BN		AT	2					80	2797	BATTERY FLUID, ALKALI
L4BN		AT	2					80	2798	PHENYLPHOSPHORUS DICHLORIDE
L4BN		AT	2					80	2799	PHENYLPHOSPHORUS THIODICHLORIDE
			3		VV14			80	2800	BATTERIES, WET, NON-SPILLABLE, electric storage
L10BH		AT	1				S20	88	2801	DYE, LIQUID, CORROSIVE, N.O.S. or DYE INTERMEDIATE, LIQUID, CORROSIVE, N.O.S.
L4BN		AT	2					80	2801	DYE, LIQUID, CORROSIVE, N.O.S. or DYE INTERMEDIATE, LIQUID, CORROSIVE, N.O.S.
L4BN		AT	3					80	2801	DYE, LIQUID, CORROSIVE, N.O.S. or DYE INTERMEDIATE, LIQUID, CORROSIVE, N.O.S.
SGAV		AT	3		VV9b			80	2802	COPPER CHLORIDE
SGAV L4BN		AT	3		VV9b			80	2803	GALLIUM
SGAN		AT	2	V1		CV23		423	2805	LITHIUM HYDRIDE, FUSED SOLID
			1	V1		CV23	S20		2806	LITHIUM NITRIDE
NOT SUBJECT TO ADR									2807	Magnetized material
L4BN		AT	3					80	2809	MERCURY
L10CH	TU14 TU15 TE19 TE21	AT	1			CV1 CV13 CV28	S9 S17	66	2810	TOXIC LIQUID, ORGANIC, N.O.S.
L4BH	TU15 TE15 TE19	AT	2			CV13 CV28	S9 S19	60	2810	TOXIC LIQUID, ORGANIC, N.O.S.
L4BH	TU15 TE15 TE19	AT	2			CV13 CV28	S9	60	2810	TOXIC LIQUID, ORGANIC, N.O.S.
S10AH L10CH	TU15 TE19	AT	1			CV1 CV13 CV28	S9 S17	66	2811	TOXIC SOLID, ORGANIC, N.O.S.
SGAH L4BH	TU15 TE15 TE19	AT	2	V11		CV13 CV28	S9 S19	60	2811	TOXIC SOLID, ORGANIC, N.O.S.
SGAH L4BH	TU15 TE15 TE19	AT	2		VV9b	CV13 CV28	S9	60	2811	TOXIC SOLID, ORGANIC, N.O.S.
NOT SUBJECT TO ADR									2812	Sodium aluminate, solid
			0	V1		CV23	S20		2813	WATER-REACTIVE SOLID, N.O.S.

UN No.	Name and description	Class	Classification code	Packing group	Labels	Special provisions	Limited quantities	Packaging			Portable tanks and bulk containers	
								Packing instructions	Special packing provisions	Mixed packing provisions	Instructions	Special provisions
	3.1.2	2.2	2.2	2.1.1.3	5.2.2	3.3	3.4.6	4.1.4	4.1.4	4.1.10	4.2.5.2 7.3.2	4.2.5.3
(1)	(2)	(3a)	(3b)	(4)	(5)	(6)	(7)	(8)	(9a)	(9b)	(10)	(11)
2813	WATER-REACTIVE SOLID, N.O.S.	4.3	W2	II	4.3	274	LQ11	P410 IBC07	PP83	MP14	T3	TP33
2813	WATER-REACTIVE SOLID, N.O.S.	4.3	W2	III	4.3	274	LQ12	P410 IBC08 R001	PP83 B4	MP14	T1	TP33
2814	INFECTIOUS SUBSTANCE, AFFECTING HUMANS	6.2	I1		6.2	318 634	LQ0	P620		MP5		
2815	N-AMINOETHYL-PIPERAZINE	8	C7	III	8		LQ19	P001 IBC03 LP01 R001		MP15	T4	TP1
2817	AMMONIUM HYDROGENDIFLUORIDE SOLUTION	8	CT1	II	8 +6.1		LQ22	P001 IBC02		MP15	T8	TP2 TP12
2817	AMMONIUM HYDROGENDIFLUORIDE SOLUTION	8	CT1	III	8 +6.1		LQ19	P001 IBC03 R001		MP15	T4	TP1 TP12
2818	AMMONIUM POLYSULPHIDE SOLUTION	8	CT1	II	8 +6.1		LQ22	P001 IBC02		MP15	T7	TP2
2818	AMMONIUM POLYSULPHIDE SOLUTION	8	CT1	III	8 +6.1		LQ19	P001 IBC03 R001		MP15	T4	TP1
2819	AMYL ACID PHOSPHATE	8	C3	III	8		LQ19	P001 IBC03 LP01 R001		MP15	T4	TP1
2820	BUTYRIC ACID	8	C3	III	8		LQ19	P001 IBC03 LP01 R001		MP15	T4	TP1
2821	PHENOL SOLUTION	6.1	T1	II	6.1		LQ17	P001 IBC02		MP15	T7	TP2
2821	PHENOL SOLUTION	6.1	T1	III	6.1		LQ19	P001 IBC03 LP01 R001		MP15	T4	TP1
2822	2-CHLOROPYRIDINE	6.1	T1	II	6.1		LQ17	P001 IBC02		MP15	T7	TP2
2823	CROTONIC ACID	8	C4	III	8		LQ24	P002 IBC08 LP02 R001		MP10	T1	TP33
2826	ETHYL CHLOROTHIOFORMATE	8	CF1	II	8 +3		LQ22	P001		MP15	T7	TP2
2829	CAPROIC ACID	8	C3	III	8		LQ19	P001 IBC03 LP01 R001		MP15	T4	TP1
2830	LITHIUM FERROSILICON	4.3	W2	II	4.3		LQ11	P410 IBC07		MP14	T3	TP33
2831	1,1,1-TRICHLOROETHANE	6.1	T1	III	6.1		LQ19	P001 IBC03 LP01 R001		MP15	T4	TP1
2834	PHOSPHOROUS ACID	8	C2	III	8		LQ24	P002 IBC08 LP02 R001	B3	MP10	T1	TP33
2835	SODIUM ALUMINIUM HYDRIDE	4.3	W2	II	4.3		LQ11	P410 IBC04		MP14	T3	TP33
2837	BISULPHATES, AQUEOUS SOLUTION	8	C1	II	8	274	LQ22	P001 IBC02		MP15	T7	TP2

ADR tank		Vehicle for tank carriage	Transport category	Special provisions for carriage				Hazard identifi-cation No.	UN No.	Name and description
Tank code	Special provisions			Packages	Bulk	Loading, unloading and handling	Operation			
4.3	4.3.5, 6.8.4	9.1.1.2	1.1.3.6	7.2.4	7.3.3	7.5.11	8.5	5.3.2.3		3.1.2
(12)	(13)	(14)	(15)	(16)	(17)	(18)	(19)	(20)	(1)	(2)
SGAN		AT	0	V1 V12		CV23		423	2813	WATER-REACTIVE SOLID, N.O.S.
SGAN		AT	0	V1	VV5	CV23		423	2813	WATER-REACTIVE SOLID, N.O.S.
			0			CV13 CV25 CV26 CV28	S3 S9 S15		2814	INFECTIOUS SUBSTANCE, AFFECTING HUMANS
L4BN		AT	3					80	2815	N-AMINOETHYL-PIPERAZINE
L4DH	TU14 TE21	AT	2			CV13 CV28		86	2817	AMMONIUM HYDROGENDIFLUORIDE SOLUTION
L4DH	TU14 TE21	AT	3			CV13 CV28		86	2817	AMMONIUM HYDROGENDIFLUORIDE SOLUTION
L4BN		AT	2			CV13 CV28		86	2818	AMMONIUM POLYSULPHIDE SOLUTION
L4BN		AT	3			CV13 CV28		86	2818	AMMONIUM POLYSULPHIDE SOLUTION
L4BN		AT	3					80	2819	AMYL ACID PHOSPHATE
L4BN		AT	3					80	2820	BUTYRIC ACID
L4BH	TU15 TE15 TE19	AT	2			CV13 CV28	S9 S19	60	2821	PHENOL SOLUTION
L4BH	TU15 TE15 TE19	AT	2			CV13 CV28	S9	60	2821	PHENOL SOLUTION
L4BH	TU15 TE15 TE19	AT	2			CV13 CV28	S9 S19	60	2822	2-CHLOROPYRIDINE
SGAV L4BN		AT	3		VV9b			80	2823	CROTONIC ACID
L4BN		FL	2				S2	83	2826	ETHYL CHLOROTHIOFORMATE
L4BN		AT	3					80	2829	CAPROIC ACID
SGAN		AT	2	V1 V12		CV23		423	2830	LITHIUM FERROSILICON
L4BH	TU15 TE15 TE19	AT	2			CV13 CV28	S9	60	2831	1,1,1-TRICHLOROETHANE
SGAV		AT	3		VV9b			80	2834	PHOSPHOROUS ACID
SGAN		AT	2	V1		CV23		423	2835	SODIUM ALUMINIUM HYDRIDE
L4BN		AT	2					80	2837	BISULPHATES, AQUEOUS SOLUTION

UN No.	Name and description	Class	Classification code	Packing group	Labels	Special provisions	Limited quantities	Packaging			Portable tanks and bulk containers	
								Packing instructions	Special packing provisions	Mixed packing provisions	Instructions	Special provisions
	3.1.2	2.2	2.2	2.1.1.3	5.2.2	3.3	3.4.6	4.1.4	4.1.4	4.1.10	4.2.5.2 7.3.2	4.2.5.3
(1)	(2)	(3a)	(3b)	(4)	(5)	(6)	(7)	(8)	(9a)	(9b)	(10)	(11)
2837	BISULPHATES, AQUEOUS SOLUTION	8	C1	III	8	274	LQ19	P001 IBC03 LP01 R001		MP15	T4	TP1
2838	VINYL BUTYRATE, STABILIZED	3	F1	II	3		LQ4	P001 IBC02 R001		MP19	T4	TP1
2839	ALDOL	6.1	T1	II	6.1		LQ17	P001 IBC02		MP15	T7	TP2
2840	BUTYRALDOXIME	3	F1	III	3		LQ7	P001 IBC03 LP01 R001		MP19	T2	TP1
2841	DI-n-AMYLAMINE	3	FT1	III	3 +6.1		LQ7	P001 IBC03 R001		MP19	T4	TP1
2842	NITROETHANE	3	F1	III	3		LQ7	P001 IBC03 LP01 R001		MP19	T2	TP1
2844	CALCIUM MANGANESE SILICON	4.3	W2	III	4.3		LQ12	P410 IBC08 R001	B4	MP14	T1	TP33
2845	PYROPHORIC LIQUID, ORGANIC, N.O.S.	4.2	S1	I	4.2	274	LQ0	P400 PR1		MP2	T22	TP2 TP7 TP9
2846	PYROPHORIC SOLID, ORGANIC, N.O.S.	4.2	S2	I	4.2	274	LQ0	P404		MP13		
2849	3-CHLOROPROPANOL-1	6.1	T1	III	6.1		LQ19	P001 IBC03 LP01 R001		MP15	T4	TP1
2850	PROPYLENE TETRAMER	3	F1	III	3		LQ7	P001 IBC03 LP01 R001		MP19	T2	TP1
2851	BORON TRIFLUORIDE DIHYDRATE	8	C1	II	8		LQ22	P001 IBC02		MP15	T7	TP2
2852	DIPICRYL SULPHIDE, WETTED with not less than 10% water, by mass	4.1	D	I	4.1	545	LQ0	P406	PP24	MP2		
2853	MAGNESIUM FLUOROSILICATE	6.1	T5	III	6.1		LQ9	P002 IBC08 LP02 R001	B3	MP10	T1	TP33
2854	AMMONIUM FLUOROSILICATE	6.1	T5	III	6.1		LQ9	P002 IBC08 LP02 R001	B3	MP10	T1	TP33
2855	ZINC FLUOROSILICATE	6.1	T5	III	6.1		LQ9	P002 IBC08 LP02 R001	B3	MP10	T1	TP33
2856	FLUOROSILICATES, N.O.S.	6.1	T5	III	6.1	274	LQ9	P002 IBC08 LP02 R001	B3	MP10	T1	TP33
2857	REFRIGERATING MACHINES containing non-flammable, non-toxic gases or ammonia solutions (UN 2672)	2	6A		2.2	119	LQ0	P003	PP32	MP9		
2858	ZIRCONIUM, DRY, coiled wire, finished metal sheets, strip (thinner than 254 microns but not thinner than 18 microns)	4.1	F3	III	4.1	546	LQ9	P002 LP02 R001		MP11		

ADR tank		Vehicle for tank carriage	Transport category	Special provisions for carriage				Hazard identification No.	UN No.	Name and description
Tank code	Special provisions			Packages	Bulk	Loading, unloading and handling	Operation			
4.3	4.3.5, 6.8.4	9.1.1.2	1.1.3.6	7.2.4	7.3.3	7.5.11	8.5	5.3.2.3		3.1.2
(12)	(13)	(14)	(15)	(16)	(17)	(18)	(19)	(20)	(1)	(2)
L4BN		AT	3					80	2837	BISULPHATES, AQUEOUS SOLUTION
LGBF		FL	2				S2 S20	339	2838	VINYL BUTYRATE, STABILIZED
L4BH	TU15 TE15 TE19	AT	2			CV13 CV28	S9 S19	60	2839	ALDOL
LGBF		FL	3				S2	30	2840	BUTYRALDOXIME
L4BH	TU15 TE15	FL	3			CV13 CV28	S2	36	2841	DI-n-AMYLAMINE
LGBF		FL	3				S2	30	2842	NITROETHANE
SGAN		AT	3	V1	VV5 VV7	CV23		423	2844	CALCIUM MANGANESE SILICON
L21DH	TU14 TC1 TE21 TM1	AT	0	V1			S20	333	2845	PYROPHORIC LIQUID, ORGANIC, N.O.S.
			0	V1			S20		2846	PYROPHORIC SOLID, ORGANIC, N.O.S.
L4BH	TU15 TE15 TE19	AT	2			CV13 CV28	S9	60	2849	3-CHLOROPROPANOL-1
LGBF		FL	3				S2	30	2850	PROPYLENE TETRAMER
L4BN		AT	2					80	2851	BORON TRIFLUORIDE DIHYDRATE
			1				S17		2852	DIPICRYL SULPHIDE, WETTED with not less than 10% water, by mass
SGAH L4BH	TU15 TE15 TE19	AT	2		VV9b	CV13 CV28	S9	60	2853	MAGNESIUM FLUOROSILICATE
SGAH L4BH	TU15 TE15 TE19	AT	2		VV9b	CV13 CV28	S9	60	2854	AMMONIUM FLUOROSILICATE
SGAH L4BH	TU15 TE15 TE19	AT	2		VV9b	CV13 CV28	S9	60	2855	ZINC FLUOROSILICATE
SGAH L4BH	TU15 TE15 TE19	AT	2		VV9b	CV13 CV28	S9	60	2856	FLUOROSILICATES, N.O.S.
			3			CV9			2857	REFRIGERATING MACHINES containing non-flammable, non-toxic gases or ammonia solutions (UN 2672)
			3		VV1			40	2858	ZIRCONIUM, DRY, coiled wire, finished metal sheets, strip (thinner than 254 microns but not thinner than 18 microns)

UN No.	Name and description	Class	Classification code	Packing group	Labels	Special provisions	Limited quantities	Packaging			Portable tanks and bulk containers	
								Packing instructions	Special packing provisions	Mixed packing provisions	Instructions	Special provisions
	3.1.2	2.2	2.2	2.1.1.3	5.2.2	3.3	3.4.6	4.1.4	4.1.4	4.1.10	4.2.5.2 7.3.2	4.2.5.3
(1)	(2)	(3a)	(3b)	(4)	(5)	(6)	(7)	(8)	(9a)	(9b)	(10)	(11)
2859	AMMONIUM METAVANADATE	6.1	T5	II	6.1		LQ18	P002 IBC08	B4	MP10	T3	TP33
2861	AMMONIUM POLYVANADATE	6.1	T5	II	6.1		LQ18	P002 IBC08	B4	MP10	T3	TP33
2862	VANADIUM PENTOXIDE, non-fused form	6.1	T5	III	6.1	600	LQ9	P002 IBC08 LP02 R001	B3	MP10	T1	TP33
2863	SODIUM AMMONIUM VANADATE	6.1	T5	II	6.1		LQ18	P002 IBC08	B4	MP10	T3	TP33
2864	POTASSIUM METAVANADATE	6.1	T5	II	6.1		LQ18	P002 IBC08	B4	MP10	T3	TP33
2865	HYDROXYLAMINE SULPHATE	8	C2	III	8		LQ24	P002 IBC08 LP02 R001	B3	MP10	T1	TP33
2869	TITANIUM TRICHLORIDE MIXTURE	8	C2	II	8		LQ23	P002 IBC08	B4	MP10	T3	TP33
2869	TITANIUM TRICHLORIDE MIXTURE	8	C2	III	8		LQ24	P002 IBC08 LP02 R001	B3	MP10	T1	TP33
2870	ALUMINIUM BOROHYDRIDE	4.2	SW	I	4.2 +4.3		LQ0	P400 PR1		MP2	T21	TP7 TP33
2870	ALUMINIUM BOROHYDRIDE IN DEVICES	4.2	SW	I	4.2 +4.3		LQ0	P002	PP13	MP2		
2871	ANTIMONY POWDER	6.1	T5	III	6.1		LQ9	P002 IBC08 LP02 R001	B3	MP10	T1	TP33
2872	DIBROMOCHLORO-PROPANES	6.1	T1	II	6.1		LQ17	P001 IBC02		MP15	T7	TP2
2872	DIBROMOCHLORO-PROPANES	6.1	T1	III	6.1		LQ19	P001 IBC03 LP01 R001		MP15	T4	TP1
2873	DIBUTYLAMINOETHANOL	6.1	T1	III	6.1		LQ19	P001 IBC03 LP01 R001		MP15	T4	TP1
2874	FURFURYL ALCOHOL	6.1	T1	III	6.1		LQ19	P001 IBC03 LP01 R001		MP15	T4	TP1
2875	HEXACHLOROPHENE	6.1	T2	III	6.1		LQ9	P002 IBC08 LP02 R001	B3	MP10	T1	TP33
2876	RESORCINOL	6.1	T2	III	6.1		LQ9	P002 IBC08 LP02 R001	B3	MP10	T1	TP33
2878	TITANIUM SPONGE GRANULES or TITANIUM SPONGE POWDERS	4.1	F3	III	4.1		LQ9	P002 IBC08 LP02 R001	B3	MP11	T1	TP33
2879	SELENIUM OXYCHLORIDE	8	CT1	I	8 +6.1		LQ0	P001		MP8 MP17	T10	TP2 TP12
2880	CALCIUM HYPOCHLORITE, HYDRATED, or CALCIUM HYPOCHLORITE, HYDRATED MIXTURE, with not less than 5.5% but not more than 16% water	5.1	O2	II	5.1	313 314	LQ11	P002 IBC08	B4 B13	MP10		

ADR tank		Vehicle for tank carriage	Transport category	Special provisions for carriage				Hazard identification No.	UN No.	Name and description
Tank code	Special provisions			Packages	Bulk	Loading, unloading and handling	Operation			
4.3	4.3.5, 6.8.4	9.1.1.2	1.1.3.6	7.2.4	7.3.3	7.5.11	8.5	5.3.2.3		3.1.2
(12)	(13)	(14)	(15)	(16)	(17)	(18)	(19)	(20)	(1)	(2)
SGAH	TU15 TE15 TE19	AT	2	V11		CV13 CV28	S9 S19	60	2859	AMMONIUM METAVANADATE
SGAH	TU15 TE15 TE19	AT	2	V11		CV13 CV28	S9 S19	60	2861	AMMONIUM POLYVANADATE
SGAH	TU15 TE15 TE19	AT	2		VV9b	CV13 CV28	S9	60	2862	VANADIUM PENTOXIDE, non-fused form
SGAH	TU15 TE15 TE19	AT	2	V11		CV13 CV28	S9 S19	60	2863	SODIUM AMMONIUM VANADATE
SGAH	TU15 TE15 TE19	AT	2	V11		CV13 CV28	S9 S19	60	2864	POTASSIUM METAVANADATE
SGAV		AT	3		VV9b			80	2865	HYDROXYLAMINE SULPHATE
SGAN		AT	2	V11				80	2869	TITANIUM TRICHLORIDE MIXTURE
SGAV		AT	3		VV9b			80	2869	TITANIUM TRICHLORIDE MIXTURE
L21DH	TU14 TC1 TE21 TM1	AT	0	V1			S20	X333	2870	ALUMINIUM BOROHYDRIDE
			0	V1			S20		2870	ALUMINIUM BOROHYDRIDE IN DEVICES
SGAH L4BH	TU15 TE15 TE19	AT	2		VV9b	CV13 CV28	S9	60	2871	ANTIMONY POWDER
L4BH	TU15 TE15 TE19	AT	2			CV13 CV28	S9 S19	60	2872	DIBROMOCHLORO-PROPANES
L4BH	TU15 TE15 TE19	AT	2			CV13 CV28	S9	60	2872	DIBROMOCHLORO-PROPANES
L4BH	TU15 TE15 TE19	AT	2			CV13 CV28	S9	60	2873	DIBUTYLAMINOETHANOL
L4BH	TU15 TE15 TE19	AT	2			CV13 CV28	S9	60	2874	FURFURYL ALCOHOL
SGAH L4BH	TU15 TE15 TE19	AT	2		VV9b	CV13 CV28	S9	60	2875	HEXACHLOROPHENE
SGAH L4BH	TU15 TE15 TE19	AT	2		VV9b	CV13 CV28	S9	60	2876	RESORCINOL
SGAV		AT	3		VV1			40	2878	TITANIUM SPONGE GRANULES or TITANIUM SPONGE POWDERS
L10BH		AT	1			CV13 CV28	S20	X886	2879	SELENIUM OXYCHLORIDE
SGAN	TU3	AT	2	V11		CV24 CV35		50	2880	CALCIUM HYPOCHLORITE, HYDRATED, or CALCIUM HYPOCHLORITE, HYDRATED MIXTURE, with not less than 5.5% but not more than 16% water

UN No.	Name and description	Class	Classification code	Packing group	Labels	Special provisions	Limited quantities	Packaging			Portable tanks and bulk containers	
								Packing instructions	Special packing provisions	Mixed packing provisions	Instructions	Special provisions
	3.1.2	2.2	2.2	2.1.1.3	5.2.2	3.3	3.4.6	4.1.4	4.1.4	4.1.10	4.2.5.2 7.3.2	4.2.5.3
(1)	(2)	(3a)	(3b)	(4)	(5)	(6)	(7)	(8)	(9a)	(9b)	(10)	(11)
2880	CALCIUM HYPOCHLORITE, HYDRATED, or CALCIUM HYPOCHLORITE, HYDRATED MIXTURE, with not less than 5.5% but not more than 16% water	5.1	O2	III	5.1	316	LQ12	P002 IBC08 R001	B4	MP10		
2881	METAL CATALYST, DRY	4.2	S4	I	4.2	274	LQ0	P404		MP13	T21	TP7 TP33
2881	METAL CATALYST, DRY	4.2	S4	II	4.2	274	LQ0	P410 IBC06		MP14	T3	TP33
2881	METAL CATALYST, DRY	4.2	S4	III	4.2	274	LQ0	P002 IBC08 LP02 R001	B3	MP14	T1	TP33
2900	INFECTIOUS SUBSTANCE, AFFECTING ANIMALS only	6.2	I2		6.2	318 634	LQ0	P620		MP5	BK1 BK2	
2901	BROMINE CHLORIDE	2	2TOC		2.3 +5.1 +8		LQ0	P200		MP9	(M)	
2902	PESTICIDE, LIQUID, TOXIC, N.O.S.	6.1	T6	I	6.1	61 648	LQ0	P001		MP8 MP17	T14	TP2 TP9 TP27
2902	PESTICIDE, LIQUID, TOXIC, N.O.S.	6.1	T6	II	6.1	61 648	LQ17	P001 IBC02		MP15	T11	TP2 TP27
2902	PESTICIDE, LIQUID, TOXIC, N.O.S.	6.1	T6	III	6.1	61 648	LQ19	P001 IBC03 LP01 R001		MP15	T7	TP2 TP28
2903	PESTICIDE, LIQUID, TOXIC, FLAMMABLE, N.O.S., flash-point not less than 23 °C	6.1	TF2	I	6.1 +3	61	LQ0	P001		MP8 MP17	T14	TP2 TP9 TP27
2903	PESTICIDE, LIQUID, TOXIC, FLAMMABLE, N.O.S., flash-point not less than 23 °C	6.1	TF2	II	6.1 +3	61	LQ17	P001 IBC02		MP15	T11	TP2 P27
2903	PESTICIDE, LIQUID, TOXIC, FLAMMABLE, N.O.S., flash-point not less than 23 °C	6.1	TF2	III	6.1 +3	61	LQ19	P001 IBC03 R001		MP15	T7	TP2
2904	CHLOROPHENOLATES, LIQUID or PHENOLATES, LIQUID	8	C9	III	8		LQ19	P001 IBC03 LP01 R001		MP15		
2905	CHLOROPHENOLATES, SOLID or PHENOLATES, SOLID	8	C10	III	8		LQ24	P002 IBC08 LP02 R001	B3	MP10	T1	TP33
2907	ISOSORBIDE DINITRATE MIXTURE with not less than 60% lactose, mannose, starch or calcium hydrogen phosphate	4.1	D	II	4.1	127	LQ8	P406 IBC06	PP26 PP80 B12	MP2		
2908	RADIOACTIVE MATERIAL, EXCEPTED PACKAGE - EMPTY PACKAGING	7				290	LQ0	See 2.2.7	See 4.1.9.1.3			

ADR tank		Vehicle for tank carriage	Transport category	Special provisions for carriage				Hazard identifi-cation No.	UN No.	Name and description
Tank code	Special provisions			Packages	Bulk	Loading, unloading and handling	Operation			
4.3	4.3.5, 6.8.4	9.1.1.2	1.1.3.6	7.2.4	7.3.3	7.5.11	8.5	5.3.2.3		3.1.2
(12)	(13)	(14)	(15)	(16)	(17)	(18)	(19)	(20)	(1)	(2)
SGAV	TU3	AT	3		VV8	CV24 CV35		50	2880	CALCIUM HYPOCHLORITE, HYDRATED, or CALCIUM HYPOCHLORITE, HYDRATED MIXTURE, with not less than 5.5% but not more than 16% water
		AT	0	V1			S20	43	2881	METAL CATALYST, DRY
SGAN		AT	2	V1 V12				40	2881	METAL CATALYST, DRY
SGAN		AT	3	V1	VV4			40	2881	METAL CATALYST, DRY
			0			CV13 CV25 CV26 CV28	S3 S9 S15	606	2900	INFECTIOUS SUBSTANCE, AFFECTING ANIMALS only
PxBH(M)		AT	1			CV9 CV10 CV36	S7 S17	265	2901	BROMINE CHLORIDE
L10CH	TU14 TU15 TE19 TE21	AT	1			CV1 CV13 CV28	S9 S17	66	2902	PESTICIDE, LIQUID, TOXIC, N.O.S.
L4BH	TU15 TE15 TE19	AT	2			CV13 CV28	S9 S19	60	2902	PESTICIDE, LIQUID, TOXIC, N.O.S.
L4BH	TU15 TE15 TE19	AT	2			CV13 CV28	S9	60	2902	PESTICIDE, LIQUID, TOXIC, N.O.S.
L10CH	TU14 TU15 TE19 TE21	FL	1			CV1 CV13 CV28	S2 S9 S17	663	2903	PESTICIDE, LIQUID, TOXIC, FLAMMABLE, N.O.S., flash-point not less than 23 °C
L4BH	TU15 TE15 TE19	FL	2			CV13 CV28	S2 S9 S19	63	2903	PESTICIDE, LIQUID, TOXIC, FLAMMABLE, N.O.S., flash-point not less than 23 °C
L4BH	TU15 TE15 TE19	FL	2			CV13 CV28	S2 S9	63	2903	PESTICIDE, LIQUID, TOXIC, FLAMMABLE, N.O.S., flash-point not less than 23 °C
L4BN		AT	3					80	2904	CHLOROPHENOLATES, LIQUID or PHENOLATES, LIQUID
SGAV L4BN		AT	3		VV9b			80	2905	CHLOROPHENOLATES, SOLID or PHENOLATES, SOLID
			2	V11 V12			S17		2907	ISOSORBIDE DINITRATE MIXTURE with not less than 60% lactose, mannose, starch or calcium hydrogen phosphate
			4			CV33	S5 S13 S21		2908	RADIOACTIVE MATERIAL, EXCEPTED PACKAGE - EMPTY PACKAGING

UN No.	Name and description	Class	Classification code	Packing group	Labels	Special provisions	Limited quantities	Packaging			Portable tanks and bulk containers	
								Packing instructions	Special packing provisions	Mixed packing provisions	Instructions	Special provisions
	3.1.2	2.2	2.2	2.1.1.3	5.2.2	3.3	3.4.6	4.1.4	4.1.4	4.1.10	4.2.5.2 7.3.2	4.2.5.3
(1)	(2)	(3a)	(3b)	(4)	(5)	(6)	(7)	(8)	(9a)	(9b)	(10)	(11)
2909	RADIOACTIVE MATERIAL, EXCEPTED PACKAGE - ARTICLES MANUFACTURED FROM NATURAL URANIUM or DEPLETED URANIUM or NATURAL THORIUM	7				290	LQ0	See 2.2.7	See 4.1.9.1.3			
2910	RADIOACTIVE MATERIAL, EXCEPTED PACKAGE - LIMITED QUANTITY OF MATERIAL	7				290	LQ0	See 2.2.7	See 4.1.9.1.3			
2911	RADIOACTIVE MATERIAL, EXCEPTED PACKAGE - INSTRUMENTS or ARTICLES	7				290	LQ0	See 2.2.7	See 4.1.9.1.3			
2912	RADIOACTIVE MATERIAL, LOW SPECIFIC ACTIVITY (LSA-I), non fissile or fissile-excepted	7			7X	172 317	LQ0	See 2.2.7 and 4.1.9	See 4.1.9.1.3		T5	TP4
2913	RADIOACTIVE MATERIAL, SURFACE CONTAMINATED OBJECTS (SCO-I or SCO-II), non fissile or fissile-excepted	7			7X	172 317	LQ0	See 2.2.7 and 4.1.9	See 4.1.9.1.3			
2915	RADIOACTIVE MATERIAL, TYPE A PACKAGE, non-special form, non fissile or fissile-excepted	7			7X	172 317	LQ0	See 2.2.7 and 4.1.9	See 4.1.9.1.3			
2916	RADIOACTIVE MATERIAL, TYPE B(U) PACKAGE, non fissile or fissile-excepted	7			7X	172 317	LQ0	See 2.2.7 and 4.1.9	See 4.1.9.1.3			
2917	RADIOACTIVE MATERIAL, TYPE B(M) PACKAGE, non fissile or fissile-excepted	7			7X	172 317	LQ0	See 2.2.7 and 4.1.9	See 4.1.9.1.3			
2919	RADIOACTIVE MATERIAL, TRANSPORTED UNDER SPECIAL ARRANGEMENT, non fissile or fissile-excepted	7			7X	172 317	LQ0	See 2.2.7 and 4.1.9	See 4.1.9.1.3			
2920	CORROSIVE LIQUID, FLAMMABLE, N.O.S.	8	CF1	I	8 +3	274	LQ0	P001		MP8 MP17	T14	TP2 TP9 TP27
2920	CORROSIVE LIQUID, FLAMMABLE, N.O.S.	8	CF1	II	8 +3	274	LQ22	P001 IBC02		MP15	T11	TP2 TP27
2921	CORROSIVE SOLID, FLAMMABLE, N.O.S.	8	CF2	I	8 +4.1	274	LQ0	P002 IBC05		MP18	T6	TP9 TP33
2921	CORROSIVE SOLID, FLAMMABLE, N.O.S.	8	CF2	II	8 +4.1	274	LQ23	P002 IBC08	B4	MP10	T3	TP33
2922	CORROSIVE LIQUID, TOXIC, N.O.S.	8	CT1	I	8 +6.1	274	LQ0	P001		MP8 MP17	T14	TP2 TP9 TP27
2922	CORROSIVE LIQUID, TOXIC, N.O.S.	8	CT1	II	8 +6.1	274	LQ22	P001 IBC02		MP15	T7	TP2
2922	CORROSIVE LIQUID, TOXIC, N.O.S.	8	CT1	III	8 +6.1	274	LQ19	P001 IBC03 R001		MP15	T7	TP1 TP28
2923	CORROSIVE SOLID, TOXIC, N.O.S.	8	CT2	I	8 +6.1	274	LQ0	P002 IBC05		MP18	T6	TP9 TP33
2923	CORROSIVE SOLID, TOXIC, N.O.S.	8	CT2	II	8 +6.1	274	LQ23	P002 IBC08	B4	MP10	T3	TP33

ADR tank		Vehicle for tank carriage	Transport category	Special provisions for carriage				Hazard identification No.	UN No.	Name and description
Tank code	Special provisions			Packages	Bulk	Loading, unloading and handling	Operation			
4.3	4.3.5, 6.8.4	9.1.1.2	1.1.3.6	7.2.4	7.3.3	7.5.11	8.5	5.3.2.3		3.1.2
(12)	(13)	(14)	(15)	(16)	(17)	(18)	(19)	(20)	(1)	(2)
			4			CV33	S5 S13 S21		2909	RADIOACTIVE MATERIAL, EXCEPTED PACKAGE - ARTICLES MANUFACTURED FROM NATURAL URANIUM or DEPLETED URANIUM or NATURAL THORIUM
			4				S5 S13 S21		2910	RADIOACTIVE MATERIAL, EXCEPTED PACKAGE - LIMITED QUANTITY OF MATERIAL
			4			CV33	S5 S13 S21		2911	RADIOACTIVE MATERIAL, EXCEPTED PACKAGE - INSTRUMENTS or ARTICLES
S2.65AN(+) L2.65CN(+)	TU36 TM7 TT7	AT	0		VV16	CV33	S6 S11 S13 S21	70	2912	RADIOACTIVE MATERIAL, LOW SPECIFIC ACTIVITY (LSA-I), non fissile or fissile-excepted
			0		VV17	CV33	S6 S11 S13 S21	70	2913	RADIOACTIVE MATERIAL, SURFACE CONTAMINATED OBJECTS (SCO-I or SCO-II), non fissile or fissile-excepted
			0			CV33	S6 S11 S12 S13 S21	70	2915	RADIOACTIVE MATERIAL, TYPE A PACKAGE, non-special form, non fissile or fissile-excepted
			0			CV33	S6 S11 S13 S21	70	2916	RADIOACTIVE MATERIAL, TYPE B(U) PACKAGE, non fissile or fissile-excepted
			0			CV33	S6 S11 S13 S21	70	2917	RADIOACTIVE MATERIAL, TYPE B(M) PACKAGE, non fissile or fissile-excepted
			0			CV33	S6 S11 S13 S21	70	2919	RADIOACTIVE MATERIAL, TRANSPORTED UNDER SPECIAL ARRANGEMENT, non fissile or fissile-excepted
L10BH		FL	1				S2 S20	883	2920	CORROSIVE LIQUID, FLAMMABLE, N.O.S.
L4BN		FL	2				S2	83	2920	CORROSIVE LIQUID, FLAMMABLE, N.O.S.
S10AN L10BH		AT	1				S20	884	2921	CORROSIVE SOLID, FLAMMABLE, N.O.S.
SGAN L4BN		AT	2	V11				84	2921	CORROSIVE SOLID, FLAMMABLE, N.O.S.
L10BH		AT	1			CV13 CV28	S20	886	2922	CORROSIVE LIQUID, TOXIC, N.O.S.
L4BN		AT	2			CV13 CV28		86	2922	CORROSIVE LIQUID, TOXIC, N.O.S.
L4BN		AT	3			CV13 CV28		86	2922	CORROSIVE LIQUID, TOXIC, N.O.S.
S10AN L10BH		AT	1			CV13 CV28	S20	886	2923	CORROSIVE SOLID, TOXIC, N.O.S.
SGAN L4BN		AT	2	V11		CV13 CV28		86	2923	CORROSIVE SOLID, TOXIC, N.O.S.

UN No.	Name and description	Class	Classification code	Packing group	Labels	Special provisions	Limited quantities	Packaging			Portable tanks and bulk containers	
								Packing instructions	Special packing provisions	Mixed packing provisions	Instructions	Special provisions
	3.1.2	2.2	2.2	2.1.1.3	5.2.2	3.3	3.4.6	4.1.4	4.1.4	4.1.10	4.2.5.2 7.3.2	4.2.5.3
(1)	(2)	(3a)	(3b)	(4)	(5)	(6)	(7)	(8)	(9a)	(9b)	(10)	(11)
2923	CORROSIVE SOLID, TOXIC, N.O.S.	8	CT2	III	8 +6.1	274	LQ24	P002 IBC08 R001	B3	MP10	T1	TP33
2924	FLAMMABLE LIQUID, CORROSIVE, N.O.S.	3	FC	I	3 +8	274	LQ3	P001		MP7 MP17	T14	TP2 TP9
2924	FLAMMABLE LIQUID, CORROSIVE, N.O.S.	3	FC	II	3 +8	274	LQ4	P001 IBC02		MP19	T11	TP2 TP27
2924	FLAMMABLE LIQUID, CORROSIVE, N.O.S.	3	FC	III	3 +8	274	LQ7	P001 IBC03 R001		MP19	T7	TP1 TP28
2925	FLAMMABLE SOLID, CORROSIVE, ORGANIC, N.O.S.	4.1	FC1	II	4.1 +8	274	LQ0	P002 IBC06		MP10	T3	TP33
2925	FLAMMABLE SOLID, CORROSIVE, ORGANIC, N.O.S.	4.1	FC1	III	4.1 +8	274	LQ0	P002 IBC06 R001		MP10	T1	TP33
2926	FLAMMABLE SOLID, TOXIC, ORGANIC, N.O.S.	4.1	FT1	II	4.1 +6.1	274	LQ0	P002 IBC06		MP10	T3	TP33
2926	FLAMMABLE SOLID, TOXIC, ORGANIC, N.O.S.	4.1	FT1	III	4.1 +6.1	274	LQ0	P002 IBC06 R001		MP10	T1	TP33
2927	TOXIC LIQUID, CORROSIVE, ORGANIC, N.O.S.	6.1	TC1	I	6.1 +8	274 315	LQ0	P001		MP8 MP17	T14	TP2 TP9 TP27
2927	TOXIC LIQUID, CORROSIVE, ORGANIC, N.O.S.	6.1	TC1	II	6.1 +8	274	LQ17	P001 IBC02		MP15	T11	TP2 TP27
2928	TOXIC SOLID, CORROSIVE, ORGANIC, N.O.S.	6.1	TC2	I	6.1 +8	274	LQ0	P002 IBC05		MP18	T6	TP9 TP33
2928	TOXIC SOLID, CORROSIVE, ORGANIC, N.O.S.	6.1	TC2	II	6.1 +8	274	LQ18	P002 IBC06		MP10	T3	TP33
2929	TOXIC LIQUID, FLAMMABLE, ORGANIC, N.O.S.	6.1	TF1	I	6.1 +3	274 315	LQ0	P001		MP8 MP17	T14	TP2 TP9 TP27
2929	TOXIC LIQUID, FLAMMABLE, ORGANIC, N.O.S.	6.1	TF1	II	6.1 +3	274	LQ17	P001 IBC02		MP15	T11	TP2 TP27
2930	TOXIC SOLID, FLAMMABLE, ORGANIC, N.O.S.	6.1	TF3	I	6.1 +4.1	274	LQ0	P002 IBC05		MP18	T6	TP9 TP33
2930	TOXIC SOLID, FLAMMABLE, ORGANIC, N.O.S.	6.1	TF3	II	6.1 +4.1	274	LQ18	P002 IBC08	B4	MP10	T3	TP33
2931	VANADYL SULPHATE	6.1	T5	II	6.1		LQ18	P002 IBC08	B4	MP10	T3	TP33
2933	METHYL 2-CHLOROPROPIONATE	3	F1	III	3		LQ7	P001 IBC03 LP01 R001		MP19	T2	TP1
2934	ISOPROPYL 2-CHLOROPROPIONATE	3	F1	III	3		LQ7	P001 IBC03 LP01 R001		MP19	T2	TP1
2935	ETHYL 2-CHLOROPROPIONATE	3	F1	III	3		LQ7	P001 IBC03 LP01 R001		MP19	T2	TP1
2936	THIOLACTIC ACID	6.1	T1	II	6.1		LQ17	P001 IBC02		MP15	T7	TP2
2937	alpha-METHYLBENZYL ALCOHOL, LIQUID	6.1	T1	III	6.1		LQ19	P001 IBC03 LP01 R001		MP15	T4	TP1

ADR tank		Vehicle for tank carriage	Transport category	Special provisions for carriage				Hazard identifi-cation No.	UN No.	Name and description
Tank code	Special provisions			Packages	Bulk	Loading, unloading and handling	Operation			
4.3	4.3.5, 6.8.4	9.1.1.2	1.1.3.6	7.2.4	7.3.3	7.5.11	8.5	5.3.2.3		3.1.2
(12)	(13)	(14)	(15)	(16)	(17)	(18)	(19)	(20)	(1)	(2)
SGAV L4BN		AT	3		VV9b	CV13 CV28		86	2923	CORROSIVE SOLID, TOXIC, N.O.S.
L10CH	TU14 TE21	FL	1				S2 S20	338	2924	FLAMMABLE LIQUID, CORROSIVE, N.O.S.
L4BH	TE15	FL	2				S2 S20	338	2924	FLAMMABLE LIQUID, CORROSIVE, N.O.S.
L4BN		FL	3				S2	38	2924	FLAMMABLE LIQUID, CORROSIVE, N.O.S.
SGAN		AT	2	V11 V12				48	2925	FLAMMABLE SOLID, CORROSIVE, ORGANIC, N.O.S.
SGAN		AT	3	V12				48	2925	FLAMMABLE SOLID, CORROSIVE, ORGANIC, N.O.S.
SGAN		AT	2	V11 V12		CV28		46	2926	FLAMMABLE SOLID, TOXIC, ORGANIC, N.O.S.
SGAN		AT	3	V12		CV28		46	2926	FLAMMABLE SOLID, TOXIC, ORGANIC, N.O.S.
L10CH	TU14 TU15 TE19 TE21	AT	1			CV1 CV13 CV28	S9 S17	668	2927	TOXIC LIQUID, CORROSIVE, ORGANIC, N.O.S.
L4BH	TU15 TE15 TE19	AT	2			CV13 CV28	S9 S19	68	2927	TOXIC LIQUID, CORROSIVE, ORGANIC, N.O.S.
S10AH	TU14 TU15 TE19 TE21	AT	1			CV1 CV13 CV28	S9 S17	668	2928	TOXIC SOLID, CORROSIVE, ORGANIC, N.O.S.
SGAH L4BH	TU15 TE15 TE19	AT	2	V11 V12		CV13 CV28	S9 S19	68	2928	TOXIC SOLID, CORROSIVE, ORGANIC, N.O.S.
L10CH	TU14 TU15 TE19 TE21	FL	1			CV1 CV13 CV28	S2 S9 S17	663	2929	TOXIC LIQUID, FLAMMABLE, ORGANIC, N.O.S.
L4BH	TU15 TE15 TE19	FL	2			CV13 CV28	S2 S9 S19	63	2929	TOXIC LIQUID, FLAMMABLE, ORGANIC, N.O.S.
		AT	1			CV1 CV13 CV28	S9 S17	664	2930	TOXIC SOLID, FLAMMABLE, ORGANIC, N.O.S.
SGAH L4BH	TU15 TE15 TE19	AT	2	V11		CV13 CV28	S9 S19	64	2930	TOXIC SOLID, FLAMMABLE, ORGANIC, N.O.S.
SGAH	TU15 TE15 TE19	AT	2	V11		CV13 CV28	S9 S19	60	2931	VANADYL SULPHATE
LGBF		FL	3				S2	30	2933	METHYL 2-CHLOROPROPIONATE
LGBF		FL	3				S2	30	2934	ISOPROPYL 2-CHLOROPROPIONATE
LGBF		FL	3				S2	30	2935	ETHYL 2-CHLOROPROPIONATE
L4BH	TU15 TE15 TE19	AT	2			CV13 CV28	S9 S19	60	2936	THIOLACTIC ACID
L4BH	TU15 TE15 TE19	AT	2			CV13 CV28	S9	60	2937	alpha-METHYLBENZYL ALCOHOL, LIQUID

UN No.	Name and description	Class	Classification code	Packing group	Labels	Special provisions	Limited quantities	Packaging			Portable tanks and bulk containers	
								Packing instructions	Special packing provisions	Mixed packing provisions	Instructions	Special provisions
	3.1.2	2.2	2.2	2.1.1.3	5.2.2	3.3	3.4.6	4.1.4	4.1.4	4.1.10	4.2.5.2 7.3.2	4.2.5.3
(1)	(2)	(3a)	(3b)	(4)	(5)	(6)	(7)	(8)	(9a)	(9b)	(10)	(11)
2940	9-PHOSPHABICYCLO-NONANES (CYCLOOCTADIENE PHOSPHINES)	4.2	S2	II	4.2		LQ0	P410 IBC06		MP14	T3	TP33
2941	FLUOROANILINES	6.1	T1	III	6.1		LQ19	P001 IBC03 LP01 R001		MP15	T4	TP1
2942	2-TRIFLUOROMETHYL-ANILINE	6.1	T1	III	6.1		LQ19	P001 IBC03 LP01 R001		MP15		
2943	TETRAHYDROFURFURYL-AMINE	3	F1	III	3		LQ7	P001 IBC03 LP01 R001		MP19	T2	TP1
2945	N-METHYLBUTYLAMINE	3	FC	II	3 +8		LQ4	P001 IBC02		MP19	T7	TP1
2946	2-AMINO-5-DIETHYLAMINOPENTANE	6.1	T1	III	6.1		LQ19	P001 IBC03 LP01 R001		MP15	T4	TP1
2947	ISOPROPYL CHLOROACETATE	3	F1	III	3		LQ7	P001 IBC03 LP01 R001		MP19	T2	TP1
2948	3-TRIFLUOROMETHYL-ANILINE	6.1	T1	II	6.1		LQ17	P001 IBC02		MP15	T7	TP2
2949	SODIUM HYDROSULPHIDE with not less than 25% water of crystallization	8	C6	II	8	523	LQ23	P002 IBC08	B4	MP10	T7	TP2
2950	MAGNESIUM GRANULES, COATED, particle size not less than 149 microns	4.3	W2	III	4.3		LQ12	P410 IBC08 R001	B4	MP14	T1 BK2	TP33
2956	5-tert-BUTYL-2,4,6-TRINITRO-m-XYLENE (MUSK XYLENE)	4.1	SR1	III	4.1	638	LQ0	P409		MP2		
2965	BORON TRIFLUORIDE DIMETHYL ETHERATE	4.3	WFC	I	4.3 +3 +8		LQ0	P401		MP2	T10	TP2 TP7
2966	THIOGLYCOL	6.1	T1	II	6.1		LQ17	P001 IBC02		MP15	T7	TP2
2967	SULPHAMIC ACID	8	C2	III	8		LQ24	P002 IBC08 LP02 R001	B3	MP10	T1	TP33
2968	MANEB, STABILIZED or MANEB PREPARATION, STABILIZED against self-heating	4.3	W2	III	4.3	547	LQ12	P002 IBC08 R001	B4	MP14	T1	TP33
2969	CASTOR BEANS or CASTOR MEAL or CASTOR POMACE or CASTOR FLAKE	9	M11	II	9	141	LQ25	P002 IBC08	PP34 B4	MP10	T3 BK1 BK2	TP33
2977	RADIOACTIVE MATERIAL, URANIUM HEXAFLUORIDE, FISSILE	7			7X +7E +8	172	LQ0	See 2.2.7 and 4.1.9	See 4.1.9.1.3			
2978	RADIOACTIVE MATERIAL, URANIUM HEXAFLUORIDE, non fissile or fissile-excepted	7			7X +8	172 317	LQ0	See 2.2.7 and 4.1.9	See 4.1.9.1.3			

ADR tank		Vehicle for tank carriage	Transport category	Special provisions for carriage				Hazard identification No.	UN No.	Name and description
Tank code	Special provisions			Packages	Bulk	Loading, unloading and handling	Operation			
4.3	4.3.5, 6.8.4	9.1.1.2	1.1.3.6	7.2.4	7.3.3	7.5.11	8.5	5.3.2.3		3.1.2
(12)	(13)	(14)	(15)	(16)	(17)	(18)	(19)	(20)	(1)	(2)
SGAN		AT	2	V1 V12				40	2940	9-PHOSPHABICYCLO-NONANES (CYCLOOCTADIENE PHOSPHINES)
L4BH	TU15 TE15 TE19	AT	2			CV13 CV28	S9	60	2941	FLUOROANILINES
L4BH	TU15 TE15 TE19	AT	2			CV13 CV28	S9	60	2942	2-TRIFLUOROMETHYL-ANILINE
LGBF		FL	3				S2	30	2943	TETRAHYDROFURFURYL-AMINE
L4BH	TE15	FL	2				S2 S20	338	2945	N-METHYLBUTYLAMINE
L4BH	TU15 TE15 TE19	AT	2			CV13 CV28	S9	60	2946	2-AMINO-5-DIETHYLAMINOPENTANE
LGBF		FL	3				S2	30	2947	ISOPROPYL CHLOROACETATE
L4BH	TU15 TE15 TE19	AT	2			CV13 CV28	S9 S19	60	2948	3-TRIFLUOROMETHYL-ANILINE
L4BN SGAN		AT	2	V11				80	2949	SODIUM HYDROSULPHIDE with not less than 25% water of crystallization
SGAN		AT	3	V1	VV5	CV23		423	2950	MAGNESIUM GRANULES, COATED, particle size not less than 149 microns
			3			CV14	S14		2956	5-tert-BUTYL-2,4,6-TRINITRO-m-XYLENE (MUSK XYLENE)
L10DH	TU4 TU14 TU22 TE21 TM2	FL	0	V1		CV23	S2 S20	382	2965	BORON TRIFLUORIDE DIMETHYL ETHERATE
L4BH	TU15 TE15 TE19	AT	2			CV13 CV28	S9 S19	60	2966	THIOGLYCOL
SGAV		AT	3		VV9b			80	2967	SULPHAMIC ACID
SGAN		AT	0	V1	VV5	CV23		423	2968	MANEB, STABILIZED or MANEB PREPARATION, STABILIZED against self-heating
SGAV		AT	2		VV3			90	2969	CASTOR BEANS or CASTOR MEAL or CASTOR POMACE or CASTOR FLAKE
			0			CV33	S6 S11 S13 S21	78	2977	RADIOACTIVE MATERIAL, URANIUM HEXAFLUORIDE, FISSILE
			0			CV33	S6 S11 S13 S21	78	2978	RADIOACTIVE MATERIAL, URANIUM HEXAFLUORIDE, non fissile or fissile-excepted

UN No.	Name and description	Class	Classification code	Packing group	Labels	Special provisions	Limited quantities	Packaging			Portable tanks and bulk containers	
								Packing instructions	Special packing provisions	Mixed packing provisions	Instructions	Special provisions
	3.1.2	2.2	2.2	2.1.1.3	5.2.2	3.3	3.4.6	4.1.4	4.1.4	4.1.10	4.2.5.2 7.3.2	4.2.5.3
(1)	(2)	(3a)	(3b)	(4)	(5)	(6)	(7)	(8)	(9a)	(9b)	(10)	(11)
2983	ETHYLENE OXIDE AND PROPYLENE OXIDE MIXTURE, not more than 30% ethylene oxide	3	FT1	I	3 +6.1		LQ0	P001		MP7 MP17	T14	TP2 TP7
2984	HYDROGEN PEROXIDE, AQUEOUS SOLUTION with not less than 8% but less than 20% hydrogen peroxide (stabilized as necessary)	5.1	O1	III	5.1	65	LQ13	P504 IBC02 R001	PP10 B5	MP15	T4	TP1 TP6 TP24
2985	CHLOROSILANES, FLAMMABLE, CORROSIVE, N.O.S.	3	FC	II	3 +8	274 548	LQ4	P001 IBC02		MP19	T11	TP2 TP27
2986	CHLOROSILANES, CORROSIVE, FLAMMABLE, N.O.S.	8	CF1	II	8 +3	274 548	LQ22	P001 IBC02		MP15	T11	TP2 TP27
2987	CHLOROSILANES, CORROSIVE, N.O.S.	8	C3	II	8	274 548	LQ22	P001 IBC02		MP15	T14	TP2 TP27
2988	CHLOROSILANES, WATER-REACTIVE, FLAMMABLE, CORROSIVE, N.O.S.	4.3	WFC	I	4.3 +3 +8	274 549	LQ0	P401 PR2		MP2	T10	TP2 TP7 TP9
2989	LEAD PHOSPHITE, DIBASIC	4.1	F3	II	4.1		LQ8	P002 IBC08	B4	MP11	T3	TP33
2989	LEAD PHOSPHITE, DIBASIC	4.1	F3	III	4.1		LQ9	P002 IBC08 LP02 R001	B3	MP11	T1	TP33
2990	LIFE-SAVING APPLIANCES, SELF-INFLATING	9	M5		9	296 635	LQ0	P905				
2991	CARBAMATE PESTICIDE, LIQUID, TOXIC, FLAMMABLE, flash-point not less than 23 °C	6.1	TF2	I	6.1 +3	61	LQ0	P001		MP8 MP17	T14	TP2 TP9 TP27
2991	CARBAMATE PESTICIDE, LIQUID, TOXIC, FLAMMABLE, flash-point not less than 23 °C	6.1	TF2	II	6.1 +3	61	LQ17	P001 IBC02		MP15	T11	TP2 TP27
2991	CARBAMATE PESTICIDE, LIQUID, TOXIC, FLAMMABLE, flash-point not less than 23 °C	6.1	TF2	III	6.1 +3	61	LQ19	P001 IBC03 R001		MP15	T7	TP2 TP28
2992	CARBAMATE PESTICIDE, LIQUID, TOXIC	6.1	T6	I	6.1	61 648	LQ0	P001		MP8 MP17	T14	TP2 TP9 TP27
2992	CARBAMATE PESTICIDE, LIQUID, TOXIC	6.1	T6	II	6.1	61 648	LQ17	P001 IBC02		MP15	T11	TP2 TP27
2992	CARBAMATE PESTICIDE, LIQUID, TOXIC	6.1	T6	III	6.1	61 648	LQ19	P001 IBC03 LP01 R001		MP15	T7	TP2 TP28
2993	ARSENICAL PESTICIDE, LIQUID, TOXIC, FLAMMABLE, flash-point not less than 23 °C	6.1	TF2	I	6.1 +3	61	LQ0	P001		MP8 MP17	T14	TP2 TP9 TP27
2993	ARSENICAL PESTICIDE, LIQUID, TOXIC, FLAMMABLE, flash-point not less than 23 °C	6.1	TF2	II	6.1 +3	61	LQ17	P001 IBC02		MP15	T11	TP2 TP27

ADR tank		Vehicle for tank carriage	Transport category	Special provisions for carriage				Hazard identifi-cation No.	UN No.	Name and description
Tank code	Special provisions			Packages	Bulk	Loading, unloading and handling	Operation			
4.3	4.3.5, 6.8.4	9.1.1.2	1.1.3.6	7.2.4	7.3.3	7.5.11	8.5	5.3.2.3		3.1.2
(12)	(13)	(14)	(15)	(16)	(17)	(18)	(19)	(20)	(1)	(2)
L10CH	TU14 TU15 TE21	FL	1			CV13 CV28	S2 S19	336	2983	ETHYLENE OXIDE AND PROPYLENE OXIDE MIXTURE, not more than 30% ethylene oxide
LGBV	TU3 TC2 TE8 TE11 TT1	AT	3			CV24		50	2984	HYDROGEN PEROXIDE, AQUEOUS SOLUTION with not less than 8% but less than 20% hydrogen peroxide (stabilized as necessary)
L4BH	TE15	FL	2				S2 S20	X338	2985	CHLOROSILANES, FLAMMABLE, CORROSIVE, N.O.S.
L4BN		FL	2				S2	X83	2986	CHLOROSILANES, CORROSIVE, FLAMMABLE, N.O.S.
L4BN		AT	2					X80	2987	CHLOROSILANES, CORROSIVE, N.O.S.
L10DH	TU14 TU26 TE21 TM2 TM3	FL	0	V1		CV23	S2 S20	X338	2988	CHLOROSILANES, WATER-REACTIVE, FLAMMABLE, CORROSIVE, N.O.S.
SGAN		AT	2	V11				40	2989	LEAD PHOSPHITE, DIBASIC
SGAV		AT	3		VV1			40	2989	LEAD PHOSPHITE, DIBASIC
			3						2990	LIFE-SAVING APPLIANCES, SELF-INFLATING
L10CH	TU14 TU15 TE19 TE21	FL	1			CV1 CV13 CV28	S2 S9 S17	663	2991	CARBAMATE PESTICIDE, LIQUID, TOXIC, FLAMMABLE, flash-point not less than 23 °C
L4BH	TU15 TE15 TE19	FL	2			CV13 CV28	S2 S9 S19	63	2991	CARBAMATE PESTICIDE, LIQUID, TOXIC, FLAMMABLE, flash-point not less than 23 °C
L4BH	TU15 TE15 TE19	FL	2			CV13 CV28	S2 S9	63	2991	CARBAMATE PESTICIDE, LIQUID, TOXIC, FLAMMABLE, flash-point not less than 23 °C
L10CH	TU14 TU15 TE19 TE21	AT	1			CV1 CV13 CV28	S9 S17	66	2992	CARBAMATE PESTICIDE, LIQUID, TOXIC
L4BH	TU15 TE15 TE19	AT	2			CV13 CV28	S9 S19	60	2992	CARBAMATE PESTICIDE, LIQUID, TOXIC
L4BH	TU15 TE15 TE19	AT	2			CV13 CV28	S9	60	2992	CARBAMATE PESTICIDE, LIQUID, TOXIC
L10CH	TU14 TU15 TE19 TE21	FL	1			CV1 CV13 CV28	S2 S9 S17	663	2993	ARSENICAL PESTICIDE, LIQUID, TOXIC, FLAMMABLE, flash-point not less than 23 °C
L4BH	TU15 TE15 TE19	FL	2			CV13 CV28	S2 S9 S19	63	2993	ARSENICAL PESTICIDE, LIQUID, TOXIC, FLAMMABLE, flash-point not less than 23 °C

UN No.	Name and description	Class	Classification code	Packing group	Labels	Special provisions	Limited quantities	Packaging			Portable tanks and bulk containers	
								Packing instructions	Special packing provisions	Mixed packing provisions	Instructions	Special provisions
	3.1.2	2.2	2.2	2.1.1.3	5.2.2	3.3	3.4.6	4.1.4	4.1.4	4.1.10	4.2.5.2 7.3.2	4.2.5.3
(1)	(2)	(3a)	(3b)	(4)	(5)	(6)	(7)	(8)	(9a)	(9b)	(10)	(11)
2993	ARSENICAL PESTICIDE, LIQUID, TOXIC, FLAMMABLE, flash-point not less than 23 °C	6.1	TF2	III	6.1 +3	61	LQ19	P001 IBC03 R001		MP15	T7	TP2 TP28
2994	ARSENICAL PESTICIDE, LIQUID, TOXIC	6.1	T6	I	6.1	61 648	LQ0	P001		MP8 MP17	T14	TP2 TP9 TP27
2994	ARSENICAL PESTICIDE, LIQUID, TOXIC	6.1	T6	II	6.1	61 648	LQ17	P001 IBC02		MP15	T11	TP2 TP27
2994	ARSENICAL PESTICIDE, LIQUID, TOXIC	6.1	T6	III	6.1	61 648	LQ19	P001 IBC03 LP01 R001		MP15	T7	TP2 TP28
2995	ORGANOCHLORINE PESTICIDE, LIQUID, TOXIC, FLAMMABLE, flash-point not less than 23 °C	6.1	TF2	I	6.1 +3	61	LQ0	P001		MP8 MP17	T14	TP2 TP9 TP27
2995	ORGANOCHLORINE PESTICIDE, LIQUID, TOXIC, FLAMMABLE, flash-point not less than 23 °C	6.1	TF2	II	6.1 +3	61	LQ17	P001 IBC02		MP15	T11	TP2 TP27
2995	ORGANOCHLORINE PESTICIDE, LIQUID, TOXIC, FLAMMABLE, flash-point not less than 23 °C	6.1	TF2	III	6.1 +3	61	LQ19	P001 IBC03 R001		MP15	T7	TP2 TP28
2996	ORGANOCHLORINE PESTICIDE, LIQUID, TOXIC	6.1	T6	I	6.1	61 648	LQ0	P001		MP8 MP17	T14	TP2 TP9 TP27
2996	ORGANOCHLORINE PESTICIDE, LIQUID, TOXIC	6.1	T6	II	6.1	61 648	LQ17	P001 IBC02		MP15	T11	TP2 TP27
2996	ORGANOCHLORINE PESTICIDE, LIQUID, TOXIC	6.1	T6	III	6.1	61 648	LQ19	P001 IBC03 LP01 R001		MP15	T7	TP2 TP28
2997	TRIAZINE PESTICIDE, LIQUID, TOXIC, FLAMMABLE, flash-point not less than 23 °C	6.1	TF2	I	6.1 +3	61	LQ0	P001		MP8 MP17	T14	TP2 TP9 TP27
2997	TRIAZINE PESTICIDE, LIQUID, TOXIC, FLAMMABLE, flash-point not less than 23 °C	6.1	TF2	II	6.1 +3	61	LQ17	P001 IBC02		MP15	T11	TP2 TP27
2997	TRIAZINE PESTICIDE, LIQUID, TOXIC, FLAMMABLE, flash-point not less than 23 °C	6.1	TF2	III	6.1 +3	61	LQ19	P001 IBC03 R001		MP15	T7	TP2 TP28
2998	TRIAZINE PESTICIDE, LIQUID, TOXIC	6.1	T6	I	6.1	61 648	LQ0	P001		MP8 MP17	T14	TP2 TP9 TP27
2998	TRIAZINE PESTICIDE, LIQUID, TOXIC	6.1	T6	II	6.1	61 648	LQ17	P001 IBC02		MP15	T11	TP2 TP27
2998	TRIAZINE PESTICIDE, LIQUID, TOXIC	6.1	T6	III	6.1	61 648	LQ19	P001 IBC03 LP01 R001		MP15	T7	TP2 TP28
3005	THIOCARBAMATE PESTICIDE, LIQUID, TOXIC, FLAMMABLE, flash-point not less than 23 °C	6.1	TF2	I	6.1 +3	61	LQ0	P001		MP8 MP17	T14	TP2 TP9

ADR tank		Vehicle for tank carriage	Transport category	Special provisions for carriage				Hazard identifi-cation No.	UN No.	Name and description
Tank code	Special provisions			Packages	Bulk	Loading, unloading and handling	Operation			
4.3	4.3.5, 6.8.4	9.1.1.2	1.1.3.6	7.2.4	7.3.3	7.5.11	8.5	5.3.2.3		3.1.2
(12)	(13)	(14)	(15)	(16)	(17)	(18)	(19)	(20)	(1)	(2)
L4BH	TU15 TE15 TE19	FL	2			CV13 CV28	S2 S9	63	2993	ARSENICAL PESTICIDE, LIQUID, TOXIC, FLAMMABLE, flash-point not less than 23 °C
L10CH	TU14 TU15 TE19 TE21	AT	1			CV1 CV13 CV28	S9 S17	66	2994	ARSENICAL PESTICIDE, LIQUID, TOXIC
L4BH	TU15 TE15 TE19	AT	2			CV13 CV28	S9 S19	60	2994	ARSENICAL PESTICIDE, LIQUID, TOXIC
L4BH	TU15 TE15 TE19	AT	2			CV13 CV28	S9	60	2994	ARSENICAL PESTICIDE, LIQUID, TOXIC
L10CH	TU14 TU15 TE19 TE21	FL	1			CV1 CV13 CV28	S2 S9 S17	663	2995	ORGANOCHLORINE PESTICIDE, LIQUID, TOXIC, FLAMMABLE, flash-point not less than 23 °C
L4BH	TU15 TE15 TE19	FL	2			CV13 CV28	S2 S9 S19	63	2995	ORGANOCHLORINE PESTICIDE, LIQUID, TOXIC, FLAMMABLE, flash-point not less than 23 °C
L4BH	TU15 TE15 TE19	FL	2			CV13 CV28	S2 S9	63	2995	ORGANOCHLORINE PESTICIDE, LIQUID, TOXIC, FLAMMABLE, flash-point not less than 23 °C
L10CH	TU14 TU15 TE19 TE21	AT	1			CV1 CV13 CV28	S9 S17	66	2996	ORGANOCHLORINE PESTICIDE, LIQUID, TOXIC
L4BH	TU15 TE15 TE19	AT	2			CV13 CV28	S9 S19	60	2996	ORGANOCHLORINE PESTICIDE, LIQUID, TOXIC
L4BH	TU15 TE15 TE19	AT	2			CV13 CV28	S9	60	2996	ORGANOCHLORINE PESTICIDE, LIQUID, TOXIC
L10CH	TU14 TU15 TE19 TE21	FL	1			CV1 CV13 CV28	S2 S9 S17	663	2997	TRIAZINE PESTICIDE, LIQUID, TOXIC, FLAMMABLE, flash-point not less than 23 °C
L4BH	TU15 TE15 TE19	FL	2			CV13 CV28	S2 S9 S19	63	2997	TRIAZINE PESTICIDE, LIQUID, TOXIC, FLAMMABLE, flash-point not less than 23 °C
L4BH	TU15 TE15 TE19	FL	2			CV13 CV28	S2 S9	63	2997	TRIAZINE PESTICIDE, LIQUID, TOXIC, FLAMMABLE, flash-point not less than 23 °C
L10CH	TU14 TU15 TE19 TE21	AT	1			CV1 CV13 CV28	S9 S17	66	2998	TRIAZINE PESTICIDE, LIQUID, TOXIC
L4BH	TU15 TE15 TE19	AT	2			CV13 CV28	S9 S19	60	2998	TRIAZINE PESTICIDE, LIQUID, TOXIC
L4BH	TU15 TE15 TE19	AT	2			CV13 CV28	S9	60	2998	TRIAZINE PESTICIDE, LIQUID, TOXIC
L10CH	TU14 TU15 TE19 TE21	FL	1			CV1 CV13 CV28	S2 S9 S17	663	3005	THIOCARBAMATE PESTICIDE, LIQUID, TOXIC, FLAMMABLE, flash-point not less than 23 °C

UN No.	Name and description	Class	Classification code	Packing group	Labels	Special provisions	Limited quantities	Packaging			Portable tanks and bulk containers	
								Packing instructions	Special packing provisions	Mixed packing provisions	Instructions	Special provisions
	3.1.2	2.2	2.2	2.1.1.3	5.2.2	3.3	3.4.6	4.1.4	4.1.4	4.1.10	4.2.5.2 7.3.2	4.2.5.3
(1)	(2)	(3a)	(3b)	(4)	(5)	(6)	(7)	(8)	(9a)	(9b)	(10)	(11)
3005	THIOCARBAMATE PESTICIDE, LIQUID, TOXIC, FLAMMABLE, flash-point not less than 23 °C	6.1	TF2	II	6.1 +3	61	LQ17	P001 IBC02		MP15	T11	TP2 TP27
3005	THIOCARBAMATE PESTICIDE, LIQUID, TOXIC, FLAMMABLE, flash-point not less than 23 °C	6.1	TF2	III	6.1 +3	61	LQ19	P001 IBC03 R001		MP15	T7	TP2 TP28
3006	THIOCARBAMATE PESTICIDE, LIQUID, TOXIC	6.1	T6	I	6.1	61 648	LQ0	P001		MP8 MP17	T14	TP2 TP9
3006	THIOCARBAMATE PESTICIDE, LIQUID, TOXIC	6.1	T6	II	6.1	61 648	LQ17	P001 IBC02		MP15	T11	TP2 TP27
3006	THIOCARBAMATE PESTICIDE, LIQUID, TOXIC	6.1	T6	III	6.1	61 648	LQ19	P001 IBC03 LP01 R001		MP15	T7	TP2 TP28
3009	COPPER BASED PESTICIDE, LIQUID, TOXIC, FLAMMABLE, flash-point not less than 23 °C	6.1	TF2	I	6.1 +3	61	LQ0	P001		MP8 MP17	T14	TP2 TP9 TP27
3009	COPPER BASED PESTICIDE, LIQUID, TOXIC, FLAMMABLE, flash-point not less than 23 °C	6.1	TF2	II	6.1 +3	61	LQ17	P001 IBC02		MP15	T11	TP2 TP27
3009	COPPER BASED PESTICIDE, LIQUID, TOXIC, FLAMMABLE, flash-point not less than 23 °C	6.1	TF2	III	6.1 +3	61	LQ19	P001 IBC03 R001		MP15	T7	TP2 TP28
3010	COPPER BASED PESTICIDE, LIQUID, TOXIC	6.1	T6	I	6.1	61 648	LQ0	P001		MP8 MP17	T14	TP2 TP9 TP27
3010	COPPER BASED PESTICIDE, LIQUID, TOXIC	6.1	T6	II	6.1	61 648	LQ17	P001 IBC02		MP15	T11	TP2 TP27
3010	COPPER BASED PESTICIDE, LIQUID, TOXIC	6.1	T6	III	6.1	61 648	LQ19	P001 IBC03 LP01 R001		MP15	T7	TP2 TP28
3011	MERCURY BASED PESTICIDE, LIQUID, TOXIC, FLAMMABLE, flash-point not less than 23 °C	6.1	TF2	I	6.1 +3	61	LQ0	P001		MP8 MP17	T14	TP2 TP9 TP27
3011	MERCURY BASED PESTICIDE, LIQUID, TOXIC, FLAMMABLE, flash-point not less than 23 °C	6.1	TF2	II	6.1 +3	61	LQ17	P001 IBC02		MP15	T11	TP2 TP27
3011	MERCURY BASED PESTICIDE, LIQUID, TOXIC, FLAMMABLE, flash-point not less than 23 °C	6.1	TF2	III	6.1 +3	61	LQ19	P001 IBC03 R001		MP15	T7	TP2 TP28
3012	MERCURY BASED PESTICIDE, LIQUID, TOXIC	6.1	T6	I	6.1	61 648	LQ0	P001		MP8 MP17	T14	TP2 TP9 TP27
3012	MERCURY BASED PESTICIDE, LIQUID, TOXIC	6.1	T6	II	6.1	61 648	LQ17	P001 IBC02		MP15	T11	TP2 TP27

ADR tank		Vehicle for tank carriage	Transport category	Special provisions for carriage				Hazard identifi-cation No.	UN No.	Name and description
Tank code	Special provisions			Packages	Bulk	Loading, unloading and handling	Operation			
4.3	4.3.5, 6.8.4	9.1.1.2	1.1.3.6	7.2.4	7.3.3	7.5.11	8.5	5.3.2.3		3.1.2
(12)	(13)	(14)	(15)	(16)	(17)	(18)	(19)	(20)	(1)	(2)
L4BH	TU15 TE15 TE19	FL	2			CV13 CV28	S2 S9 S19	63	3005	THIOCARBAMATE PESTICIDE, LIQUID, TOXIC, FLAMMABLE, flash-point not less than 23 °C
L4BH	TU15 TE15 TE19	FL	2			CV13 CV28	S2 S9	63	3005	THIOCARBAMATE PESTICIDE, LIQUID, TOXIC, FLAMMABLE, flash-point not less than 23 °C
L10CH	TU14 TU15 TE19 TE21	AT	1			CV1 CV13 CV28	S9 S17	66	3006	THIOCARBAMATE PESTICIDE, LIQUID, TOXIC
L4BH	TU15 TE15 TE19	AT	2			CV13 CV28	S9 S19	60	3006	THIOCARBAMATE PESTICIDE, LIQUID, TOXIC
L4BH	TU15 TE15 TE19	AT	2			CV13 CV28	S9	60	3006	THIOCARBAMATE PESTICIDE, LIQUID, TOXIC
L10CH	TU14 TU15 TE19 TE21	FL	1			CV1 CV13 CV28	S2 S9 S17	663	3009	COPPER BASED PESTICIDE, LIQUID, TOXIC, FLAMMABLE, flash-point not less than 23 °C
L4BH	TU15 TE15 TE19	FL	2			CV13 CV28	S2 S9 S19	63	3009	COPPER BASED PESTICIDE, LIQUID, TOXIC, FLAMMABLE, flash-point not less than 23 °C
L4BH	TU15 TE15 TE19	FL	2			CV13 CV28	S2 S9	63	3009	COPPER BASED PESTICIDE, LIQUID, TOXIC, FLAMMABLE, flash-point not less than 23 °C
L10CH	TU14 TU15 TE19 TE21	AT	1			CV1 CV13 CV28	S9 S17	66	3010	COPPER BASED PESTICIDE, LIQUID, TOXIC
L4BH	TU15 TE15 TE19	AT	2			CV13 CV28	S9 S19	60	3010	COPPER BASED PESTICIDE, LIQUID, TOXIC
L4BH	TU15 TE15 TE19	AT	2			CV13 CV28	S9	60	3010	COPPER BASED PESTICIDE, LIQUID, TOXIC
L10CH	TU14 TU15 TE19 TE21	FL	1			CV1 CV13 CV28	S2 S9 S17	663	3011	MERCURY BASED PESTICIDE, LIQUID, TOXIC, FLAMMABLE, flash-point not less than 23 °C
L4BH	TU15 TE15 TE19	FL	2			CV13 CV28	S2 S9 S19	63	3011	MERCURY BASED PESTICIDE, LIQUID, TOXIC, FLAMMABLE, flash-point not less than 23 °C
L4BH	TU15 TE15 TE19	FL	2			CV13 CV28	S2 S9	63	3011	MERCURY BASED PESTICIDE, LIQUID, TOXIC, FLAMMABLE, flash-point not less than 23 °C
L10CH	TU14 TU15 TE19 TE21	AT	1			CV1 CV13 CV28	S9 S17	66	3012	MERCURY BASED PESTICIDE, LIQUID, TOXIC
L4BH	TU15 TE15 TE19	AT	2			CV13 CV28	S9 S19	60	3012	MERCURY BASED PESTICIDE, LIQUID, TOXIC

UN No.	Name and description	Class	Classification code	Packing group	Labels	Special provisions	Limited quantities	Packaging			Portable tanks and bulk containers	
								Packing instructions	Special packing provisions	Mixed packing provisions	Instructions	Special provisions
	3.1.2	2.2	2.2	2.1.1.3	5.2.2	3.3	3.4.6	4.1.4	4.1.4	4.1.10	4.2.5.2 7.3.2	4.2.5.3
(1)	(2)	(3a)	(3b)	(4)	(5)	(6)	(7)	(8)	(9a)	(9b)	(10)	(11)
3012	MERCURY BASED PESTICIDE, LIQUID, TOXIC	6.1	T6	III	6.1	61 648	LQ19	P001 IBC03 LP01 R001		MP15	T7	TP2 TP28
3013	SUBSTITUTED NITROPHENOL PESTICIDE, LIQUID, TOXIC, FLAMMABLE, flash-point not less than 23 °C	6.1	TF2	I	6.1 +3	61	LQ0	P001		MP8 MP17	T14	TP2 TP9 TP27
3013	SUBSTITUTED NITROPHENOL PESTICIDE, LIQUID, TOXIC, FLAMMABLE, flash-point not less than 23 °C	6.1	TF2	II	6.1 +3	61	LQ17	P001 IBC02		MP15	T11	TP2 TP27
3013	SUBSTITUTED NITROPHENOL PESTICIDE, LIQUID, TOXIC, FLAMMABLE, flash-point not less than 23 °C	6.1	TF2	III	6.1 +3	61	LQ19	P001 IBC03 R001		MP15	T7	TP2 TP28
3014	SUBSTITUTED NITROPHENOL PESTICIDE, LIQUID, TOXIC	6.1	T6	I	6.1	61 648	LQ0	P001		MP8 MP17	T14	TP2 TP9 TP27
3014	SUBSTITUTED NITROPHENOL PESTICIDE, LIQUID, TOXIC	6.1	T6	II	6.1	61 648	LQ17	P001 IBC02		MP15	T11	TP2 TP27
3014	SUBSTITUTED NITROPHENOL PESTICIDE, LIQUID, TOXIC	6.1	T6	III	6.1	61 648	LQ19	P001 IBC03 LP01 R001		MP15	T7	TP2 TP28
3015	BIPYRIDILIUM PESTICIDE, LIQUID, TOXIC, FLAMMABLE, flash-point not less than 23 °C	6.1	TF2	I	6.1 +3	61	LQ0	P001		MP8 MP17	T14	TP2 TP9 TP27
3015	BIPYRIDILIUM PESTICIDE, LIQUID, TOXIC, FLAMMABLE, flash-point not less than 23 °C	6.1	TF2	II	6.1 +3	61	LQ17	P001 IBC02		MP15	T11	TP2 TP27
3015	BIPYRIDILIUM PESTICIDE, LIQUID, TOXIC, FLAMMABLE, flash-point not less than 23 °C	6.1	TF2	III	6.1 +3	61	LQ19	P001 IBC03 R001		MP15	T7	TP2 TP28
3016	BIPYRIDILIUM PESTICIDE, LIQUID, TOXIC	6.1	T6	I	6.1	61 648	LQ0	P001		MP8 MP17	T14	TP2 TP9 TP27
3016	BIPYRIDILIUM PESTICIDE, LIQUID, TOXIC	6.1	T6	II	6.1	61 648	LQ17	P001 IBC02		MP15	T11	TP2 TP27
3016	BIPYRIDILIUM PESTICIDE, LIQUID, TOXIC	6.1	T6	III	6.1	61 648	LQ19	P001 IBC03 LP01 R001		MP15	T7	TP2 TP28
3017	ORGANOPHOSPHORUS PESTICIDE, LIQUID, TOXIC, FLAMMABLE, flash-point not less than 23 °C	6.1	TF2	I	6.1 +3	61	LQ0	P001		MP8 MP17	T14	TP2 TP9 TP27

ADR tank		Vehicle for tank carriage	Transport category	Special provisions for carriage				Hazard identifi-cation No.	UN No.	Name and description
Tank code	Special provisions			Packages	Bulk	Loading, unloading and handling	Operation			
4.3	4.3.5, 6.8.4	9.1.1.2	1.1.3.6	7.2.4	7.3.3	7.5.11	8.5	5.3.2.3		3.1.2
(12)	(13)	(14)	(15)	(16)	(17)	(18)	(19)	(20)	(1)	(2)
L4BH	TU15 TE15 TE19	AT	2			CV13 CV28	S9	60	3012	MERCURY BASED PESTICIDE, LIQUID, TOXIC
L10CH	TU14 TU15 TE19 TE21	FL	1			CV1 CV13 CV28	S2 S9 S17	663	3013	SUBSTITUTED NITROPHENOL PESTICIDE, LIQUID, TOXIC, FLAMMABLE, flash-point not less than 23 °C
L4BH	TU15 TE15 TE19	FL	2			CV13 CV28	S2 S9 S19	63	3013	SUBSTITUTED NITROPHENOL PESTICIDE, LIQUID, TOXIC, FLAMMABLE, flash-point not less than 23 °C
L4BH	TU15 TE15 TE19	FL	2			CV13 CV28	S2 S9	63	3013	SUBSTITUTED NITROPHENOL PESTICIDE, LIQUID, TOXIC, FLAMMABLE, flash-point not less than 23 °C
L10CH	TU14 TU15 TE19 TE21	AT	1			CV1 CV13 CV28	S9 S17	66	3014	SUBSTITUTED NITROPHENOL PESTICIDE, LIQUID, TOXIC
L4BH	TU15 TE15 TE19	AT	2			CV13 CV28	S9 S19	60	3014	SUBSTITUTED NITROPHENOL PESTICIDE, LIQUID, TOXIC
L4BH	TU15 TE15 TE19	AT	2			CV13 CV28	S9	60	3014	SUBSTITUTED NITROPHENOL PESTICIDE, LIQUID, TOXIC
L10CH	TU14 TU15 TE19 TE21	FL	1			CV1 CV13 CV28	S2 S9 S17	663	3015	BIPYRIDILIUM PESTICIDE, LIQUID, TOXIC, FLAMMABLE, flash-point not less than 23 °C
L4BH	TU15 TE15 TE19	FL	2			CV13 CV28	S2 S9 S19	63	3015	BIPYRIDILIUM PESTICIDE, LIQUID, TOXIC, FLAMMABLE, flash-point not less than 23 °C
L4BH	TU15 TE15 TE19	FL	2			CV13 CV28	S2 S9	63	3015	BIPYRIDILIUM PESTICIDE, LIQUID, TOXIC, FLAMMABLE, flash-point not less than 23 °C
L10CH	TU14 TU15 TE19 TE21	AT	1			CV1 CV13 CV28	S9 S17	66	3016	BIPYRIDILIUM PESTICIDE, LIQUID, TOXIC
L4BH	TU15 TE15 TE19	AT	2			CV13 CV28	S9 S19	60	3016	BIPYRIDILIUM PESTICIDE, LIQUID, TOXIC
L4BH	TU15 TE15 TE19	AT	2			CV13 CV28	S9	60	3016	BIPYRIDILIUM PESTICIDE, LIQUID, TOXIC
L10CH	TU14 TU15 TE19 TE21	FL	1			CV1 CV13 CV28	S2 S9 S17	663	3017	ORGANOPHOSPHORUS PESTICIDE, LIQUID, TOXIC, FLAMMABLE, flash-point not less than 23 °C

UN No.	Name and description	Class	Classification code	Packing group	Labels	Special provisions	Limited quantities	Packaging			Portable tanks and bulk containers	
								Packing instructions	Special packing provisions	Mixed packing provisions	Instructions	Special provisions
	3.1.2	2.2	2.2	2.1.1.3	5.2.2	3.3	3.4.6	4.1.4	4.1.4	4.1.10	4.2.5.2 7.3.2	4.2.5.3
(1)	(2)	(3a)	(3b)	(4)	(5)	(6)	(7)	(8)	(9a)	(9b)	(10)	(11)
3017	ORGANOPHOSPHORUS PESTICIDE, LIQUID, TOXIC, FLAMMABLE, flash-point not less than 23 °C	6.1	TF2	II	6.1 +3	61	LQ17	P001 IBC02		MP15	T11	TP2 TP27
3017	ORGANOPHOSPHORUS PESTICIDE, LIQUID, TOXIC, FLAMMABLE, flash-point not less than 23 °C	6.1	TF2	III	6.1 +3	61	LQ19	P001 IBC03 R001		MP15	T7	TP2 TP28
3018	ORGANOPHOSPHORUS PESTICIDE, LIQUID, TOXIC	6.1	T6	I	6.1	61 648	LQ0	P001		MP8 MP17	T14	TP2 TP9 TP27
3018	ORGANOPHOSPHORUS PESTICIDE, LIQUID, TOXIC	6.1	T6	II	6.1	61 648	LQ17	P001 IBC02		MP15	T11	TP2 TP27
3018	ORGANOPHOSPHORUS PESTICIDE, LIQUID, TOXIC	6.1	T6	III	6.1	61 648	LQ19	P001 IBC03 LP01 R001		MP15	T7	TP2 TP28
3019	ORGANOTIN PESTICIDE, LIQUID, TOXIC, FLAMMABLE, flash-point not less than 23 °C	6.1	TF2	I	6.1 +3	61	LQ0	P001		MP8 MP17	T14	TP2 TP9 TP27
3019	ORGANOTIN PESTICIDE, LIQUID, TOXIC, FLAMMABLE, flash-point not less than 23 °C	6.1	TF2	II	6.1 +3	61	LQ17	P001 IBC02		MP15	T11	TP2 TP27
3019	ORGANOTIN PESTICIDE, LIQUID, TOXIC, FLAMMABLE, flash-point not less than 23 °C	6.1	TF2	III	6.1 +3	61	LQ19	P001 IBC03 R001		MP15	T7	TP2 TP28
3020	ORGANOTIN PESTICIDE, LIQUID, TOXIC	6.1	T6	I	6.1	61 648	LQ0	P001		MP8 MP17	T14	TP2 TP9 TP27
3020	ORGANOTIN PESTICIDE, LIQUID, TOXIC	6.1	T6	II	6.1	61 648	LQ17	P001 IBC02		MP15	T11	TP2 TP27
3020	ORGANOTIN PESTICIDE, LIQUID, TOXIC	6.1	T6	III	6.1	61 648	LQ19	P001 IBC03 LP01 R001		MP15	T7	TP2 TP28
3021	PESTICIDE, LIQUID, FLAMMABLE, TOXIC, N.O.S., flash-point less than 23 °C	3	FT2	I	3 +6.1	61	LQ3	P001		MP7 MP17	T14	TP2 TP9 TP27
3021	PESTICIDE, LIQUID, FLAMMABLE, TOXIC, N.O.S., flash-point less than 23 °C	3	FT2	II	3 +6.1	61	LQ4	P001 IBC02 R001		MP19	T11	TP2 TP27
3022	1,2-BUTYLENE OXIDE, STABILIZED	3	F1	II	3		LQ4	P001 IBC02 R001		MP19	T4	TP1
3023	2-METHYL-2-HEPTANETHIOL	6.1	TF1	I	6.1 +3		LQ0	P001		MP8 MP17	T14	TP2
3024	COUMARIN DERIVATIVE PESTICIDE, LIQUID, FLAMMABLE, TOXIC, flash-point less than 23 °C	3	FT2	I	3 +6.1	61	LQ3	P001		MP7 MP17	T14	TP2 TP9 TP27
3024	COUMARIN DERIVATIVE PESTICIDE, LIQUID, FLAMMABLE, TOXIC, flash-point less than 23 °C	3	FT2	II	3 +6.1	61	LQ4	P001 IBC02 R001		MP19	T11	TP2 TP27

ADR tank		Vehicle for tank carriage	Transport category	Special provisions for carriage				Hazard identification No.	UN No.	Name and description
Tank code	Special provisions			Packages	Bulk	Loading, unloading and handling	Operation			
4.3	4.3.5, 6.8.4	9.1.1.2	1.1.3.6	7.2.4	7.3.3	7.5.11	8.5	5.3.2.3		3.1.2
(12)	(13)	(14)	(15)	(16)	(17)	(18)	(19)	(20)	(1)	(2)
L4BH	TU15 TE15 TE19	FL	2			CV13 CV28	S2 S9 S19	63	3017	ORGANOPHOSPHORUS PESTICIDE, LIQUID, TOXIC, FLAMMABLE, flash-point not less than 23 °C
L4BH	TU15 TE15 TE19	FL	2			CV13 CV28	S2 S9	63	3017	ORGANOPHOSPHORUS PESTICIDE, LIQUID, TOXIC, FLAMMABLE, flash-point not less than 23 °C
L10CH	TU14 TU15 TE19 TE21	AT	1			CV1 CV13 CV28	S9 S17	66	3018	ORGANOPHOSPHORUS PESTICIDE, LIQUID, TOXIC
L4BH	TU15 TE15 TE19	AT	2			CV13 CV28	S9 S19	60	3018	ORGANOPHOSPHORUS PESTICIDE, LIQUID, TOXIC
L4BH	TU15 TE15 TE19	AT	2			CV13 CV28	S9	60	3018	ORGANOPHOSPHORUS PESTICIDE, LIQUID, TOXIC
L10CH	TU14 TU15 TE19 TE21	FL	1			CV1 CV13 CV28	S2 S9 S17	663	3019	ORGANOTIN PESTICIDE, LIQUID, TOXIC, FLAMMABLE, flash-point not less than 23 °C
L4BH	TU15 TE15 TE19	FL	2			CV13 CV28	S2 S9 S19	63	3019	ORGANOTIN PESTICIDE, LIQUID, TOXIC, FLAMMABLE, flash-point not less than 23 °C
L4BH	TU15 TE15 TE19	FL	2			CV13 CV28	S2 S9	63	3019	ORGANOTIN PESTICIDE, LIQUID, TOXIC, FLAMMABLE, flash-point not less than 23 °C
L10CH	TU14 TU15 TE19 TE21	AT	1			CV1 CV13 CV28	S9 S17	66	3020	ORGANOTIN PESTICIDE, LIQUID, TOXIC
L4BH	TU15 TE15 TE19	AT	2			CV13 CV28	S9 S19	60	3020	ORGANOTIN PESTICIDE, LIQUID, TOXIC
L4BH	TU15 TE15 TE19	AT	2			CV13 CV28	S9	60	3020	ORGANOTIN PESTICIDE, LIQUID, TOXIC
L10CH	TU14 TU15 TE21	FL	1			CV13 CV28	S2 S19	336	3021	PESTICIDE, LIQUID, FLAMMABLE, TOXIC, N.O.S., flash-point less than 23 °C
L4BH	TU15 TE15	FL	2			CV13 CV28	S2 S19	336	3021	PESTICIDE, LIQUID, FLAMMABLE, TOXIC, N.O.S., flash-point less than 23 °C
LGBF		FL	2				S2 S20	339	3022	1,2-BUTYLENE OXIDE, STABILIZED
L10CH	TU14 TU15 TE19 TE21	FL	1			CV1 CV13 CV28	S2 S9 S17	663	3023	2-METHYL-2-HEPTANETHIOL
L10CH	TU14 TU15 TE21	FL	1			CV13 CV28	S2 S19	336	3024	COUMARIN DERIVATIVE PESTICIDE, LIQUID, FLAMMABLE, TOXIC, flash-point less than 23 °C
L4BH	TU15 TE15	FL	2			CV13 CV28	S2 S19	336	3024	COUMARIN DERIVATIVE PESTICIDE, LIQUID, FLAMMABLE, TOXIC, flash-point less than 23 °C

UN No.	Name and description	Class	Classification code	Packing group	Labels	Special provisions	Limited quantities	Packaging			Portable tanks and bulk containers	
								Packing instructions	Special packing provisions	Mixed packing provisions	Instructions	Special provisions
	3.1.2	2.2	2.2	2.1.1.3	5.2.2	3.3	3.4.6	4.1.4	4.1.4	4.1.10	4.2.5.2 7.3.2	4.2.5.3
(1)	(2)	(3a)	(3b)	(4)	(5)	(6)	(7)	(8)	(9a)	(9b)	(10)	(11)
3025	COUMARIN DERIVATIVE PESTICIDE, LIQUID, TOXIC, FLAMMABLE, flash-point not less than 23 °C	6.1	TF2	I	6.1 +3	61	LQ0	P001		MP8 MP17	T14	TP2 TP9 TP27
3025	COUMARIN DERIVATIVE PESTICIDE, LIQUID, TOXIC, FLAMMABLE, flash-point not less than 23 °C	6.1	TF2	II	6.1 +3	61	LQ17	P001 IBC02		MP15	T11	TP2 TP27
3025	COUMARIN DERIVATIVE PESTICIDE, LIQUID, TOXIC, FLAMMABLE, flash-point not less than 23 °C	6.1	TF2	III	6.1 +3	61	LQ19	P001 IBC03 R001		MP15	T7	TP1 TP28
3026	COUMARIN DERIVATIVE PESTICIDE, LIQUID, TOXIC	6.1	T6	I	6.1	61 648	LQ0	P001		MP8 MP17	T14	TP2 TP9 TP27
3026	COUMARIN DERIVATIVE PESTICIDE, LIQUID, TOXIC	6.1	T6	II	6.1	61 648	LQ17	P001 IBC02		MP15	T11	TP2 TP27
3026	COUMARIN DERIVATIVE PESTICIDE, LIQUID, TOXIC	6.1	T6	III	6.1	61 648	LQ19	P001 IBC03 LP01 R001		MP15	T7	TP1 TP28
3027	COUMARIN DERIVATIVE PESTICIDE, SOLID, TOXIC	6.1	T7	I	6.1	61 648	LQ0	P002 IBC07		MP18	T6	TP33
3027	COUMARIN DERIVATIVE PESTICIDE, SOLID, TOXIC	6.1	T7	II	6.1	61 648	LQ18	P002 IBC08	B4	MP10	T3	TP33
3027	COUMARIN DERIVATIVE PESTICIDE, SOLID, TOXIC	6.1	T7	III	6.1	61 648	LQ9	P002 IBC08 LP02 R001	B3	MP10	T1	TP33
3028	BATTERIES, DRY, CONTAINING POTASSIUM HYDROXIDE SOLID, electric storage	8	C11		8	295 304 598	LQ0	P801 P801a				
3048	ALUMINIUM PHOSPHIDE PESTICIDE	6.1	T7	I	6.1	61 153 648	LQ0	P002 IBC07		MP18	T6	TP33
3051	ALUMINIUM ALKYLS	4.2	SW	I	4.2 +4.3	274 320	LQ0	P400 PR1		MP2	T21	TP2 TP7 TP9
3052	ALUMINIUM ALKYL HALIDES, LIQUID	4.2	SW	I	4.2 +4.3	274 320	LQ0	P400 PR1		MP2	T21	TP2 TP7 TP9
3053	MAGNESIUM ALKYLS	4.2	SW	I	4.2 +4.3	274 320	LQ0	P400 PR1		MP2	T21	TP2 TP7
3054	CYCLOHEXYL MERCAPTAN	3	F1	III	3		LQ7	P001 IBC03 LP01 R001		MP19	T2	TP1
3055	2-(2-AMINOETHOXY) ETHANOL	8	C7	III	8		LQ19	P001 IBC03 LP01 R001		MP15	T4	TP1
3056	n-HEPTALDEHYDE	3	F1	III	3		LQ7	P001 IBC03 LP01 R001		MP19	T2	TP1
3057	TRIFLUOROACETYL CHLORIDE	2	2TC		2.3 +8		LQ0	P200		MP9	T50	TP21

ADR tank		Vehicle for tank carriage	Transport category	Special provisions for carriage				Hazard identifi-cation No.	UN No.	Name and description
Tank code	Special provisions			Packages	Bulk	Loading, unloading and handling	Operation			
4.3	4.3.5, 6.8.4	9.1.1.2	1.1.3.6	7.2.4	7.3.3	7.5.11	8.5	5.3.2.3		3.1.2
(12)	(13)	(14)	(15)	(16)	(17)	(18)	(19)	(20)	(1)	(2)
L10CH	TU14 TU15 TE19 TE21	FL	1			CV1 CV13 CV28	S2 S9 S17	663	3025	COUMARIN DERIVATIVE PESTICIDE, LIQUID, TOXIC, FLAMMABLE, flash-point not less than 23 °C
L4BH	TU15 TE15 TE19	FL	2			CV13 CV28	S2 S9 S19	63	3025	COUMARIN DERIVATIVE PESTICIDE, LIQUID, TOXIC, FLAMMABLE, flash-point not less than 23 °C
L4BH	TU15 TE15 TE19	FL	2			CV13 CV28	S2 S9	63	3025	COUMARIN DERIVATIVE PESTICIDE, LIQUID, TOXIC, FLAMMABLE, flash-point not less than 23 °C
L10CH	TU14 TU15 TE19 TE21	AT	1			CV1 CV13 CV28	S9 S17	66	3026	COUMARIN DERIVATIVE PESTICIDE, LIQUID, TOXIC
L4BH	TU15 TE15 TE19	AT	2			CV13 CV28	S9 S19	60	3026	COUMARIN DERIVATIVE PESTICIDE, LIQUID, TOXIC
L4BH	TU15 TE15 TE19	AT	2			CV13 CV28	S9	60	3026	COUMARIN DERIVATIVE PESTICIDE, LIQUID, TOXIC
S10AH L10CH	TU14 TU15 TE19 TE21	AT	1	V10 V12		CV1 CV13 CV28	S9 S17	66	3027	COUMARIN DERIVATIVE PESTICIDE, SOLID, TOXIC
SGAH L4BH	TU15 TE15 TE19	AT	2	V11		CV13 CV28	S9 S19	60	3027	COUMARIN DERIVATIVE PESTICIDE, SOLID, TOXIC
SGAH L4BH	TU15 TE15 TE19	AT	2		VV9b	CV13 CV28	S9	60	3027	COUMARIN DERIVATIVE PESTICIDE, SOLID, TOXIC
			3		VV14			80	3028	BATTERIES, DRY, CONTAINING POTASSIUM HYDROXIDE SOLID, electric storage
S10AH	TU15 TE19	AT	1	V10 V12		CV1 CV13 CV28	S9 S17	642	3048	ALUMINIUM PHOSPHIDE PESTICIDE
L21DH	TU4 TU14 TU22 TC1 TE21 TM1	AT	0	V1			S20	X333	3051	ALUMINIUM ALKYLS
L21DH	TU4 TU14 TU22 TC1 TE21 TM1	AT	0	V1			S20	X333	3052	ALUMINIUM ALKYL HALIDES, LIQUID
L21DH	TU4 TU14 TU22 TC1 TE21 TM1	AT	0	V1			S20	X333	3053	MAGNESIUM ALKYLS
LGBF		FL	3				S2	30	3054	CYCLOHEXYL MERCAPTAN
L4BN		AT	3					80	3055	2-(2-AMINOETHOXY) ETHANOL
LGBF		FL	3				S2	30	3056	n-HEPTALDEHYDE
PxBH(M)		AT	1			CV9 CV10 CV36	S7 S17	268	3057	TRIFLUOROACETYL CHLORIDE

UN No.	Name and description	Class	Classification code	Packing group	Labels	Special provisions	Limited quantities	Packaging			Portable tanks and bulk containers	
								Packing instructions	Special packing provisions	Mixed packing provisions	Instructions	Special provisions
	3.1.2	2.2	2.2	2.1.1.3	5.2.2	3.3	3.4.6	4.1.4	4.1.4	4.1.10	4.2.5.2 7.3.2	4.2.5.3
(1)	(2)	(3a)	(3b)	(4)	(5)	(6)	(7)	(8)	(9a)	(9b)	(10)	(11)
3064	NITROGLYCERIN, SOLUTION IN ALCOHOL with more than 1% but not more than 5% nitroglycerin	3	D	II	3		LQ0	P300		MP2		
3065	ALCOHOLIC BEVERAGES, with more than 70% alcohol by volume	3	F1	II	3		LQ5	P001 IBC02 R001	PP2	MP19	T4	TP1
3065	ALCOHOLIC BEVERAGES, with more than 24% but not more than 70% alcohol by volume	3	F1	III	3	144 145 247	LQ7	P001 IBC03 R001	PP2	MP19	T2	TP1
3066	PAINT (including paint, lacquer, enamel, stain, shellac, varnish, polish, liquid filler and liquid lacquer base) or PAINT RELATED MATERIAL (including paint thinning and reducing compound)	8	C9	II	8	163	LQ22	P001 IBC02		MP15	T7	TP2
3066	PAINT (including paint, lacquer, enamel, stain, shellac, varnish, polish, liquid filler and liquid lacquer base) or PAINT RELATED MATERIAL (including paint thinning and reducing compound)	8	C9	III	8	163	LQ19	P001 IBC03 R001		MP15	T4	TP1
3070	ETHYLENE OXIDE AND DICHLORODIFLUORO-METHANE MIXTURE with not more than 12.5% ethylene oxide	2	2A		2.2		LQ1	P200		MP9	(M) T50	
3071	MERCAPTANS, LIQUID, TOXIC, FLAMMABLE, N.O.S. or MERCAPTAN MIXTURE, LIQUID, TOXIC, FLAMMABLE, N.O.S.	6.1	TF1	II	6.1 +3	274	LQ17	P001 IBC02		MP15	T11	TP2 TP27
3072	LIFE-SAVING APPLIANCES NOT SELF-INFLATING containing dangerous goods as equipment	9	M5		9	296 635	LQ0	P905				
3073	VINYLPYRIDINES, STABILIZED	6.1	TFC	II	6.1 +3 +8		LQ17	P001 IBC01		MP15	T7	TP2
3076	ALUMINIUM ALKYL HYDRIDES	4.2	SW	I	4.2 +4.3	274 320	LQ0	P400 PR1		MP2	T21	TP2 TP7
3077	ENVIRONMENTALLY HAZARDOUS SUBSTANCE, SOLID, N.O.S.	9	M7	III	9	274	LQ27	P002 IBC08 LP02 R001	PP12 B3	MP10	T1	TP33
3078	CERIUM, turnings or gritty powder	4.3	W2	II	4.3	550	LQ11	P410 IBC07		MP14	T3	TP33
3079	METHACRYLONITRILE, STABILIZED	3	FT1	I	3 +6.1		LQ0	P001		MP7 MP17	T14	TP2
3080	ISOCYANATES, TOXIC, FLAMMABLE, N.O.S. or ISOCYANATE SOLUTION, TOXIC, FLAMMABLE, N.O.S.	6.1	TF1	II	6.1 +3	274 551	LQ17	P001 IBC02		MP15	T11	TP2 TP27

ADR tank		Vehicle for tank carriage	Transport category	Special provisions for carriage				Hazard identifi-cation No.	UN No.	Name and description
Tank code	Special provisions			Packages	Bulk	Loading, unloading and handling	Operation			
4.3	4.3.5, 6.8.4	9.1.1.2	1.1.3.6	7.2.4	7.3.3	7.5.11	8.5	5.3.2.3		3.1.2
(12)	(13)	(14)	(15)	(16)	(17)	(18)	(19)	(20)	(1)	(2)
			2				S2 S19		3064	NITROGLYCERIN, SOLUTION IN ALCOHOL with more than 1% but not more than 5% nitroglycerin
LGBF		FL	2				S2 S20	33	3065	ALCOHOLIC BEVERAGES, with more than 70% alcohol by volume
LGBF		FL	3				S2	30	3065	ALCOHOLIC BEVERAGES, with more than 24% but not more than 70% alcohol by volume
L4BN		AT	2					80	3066	PAINT (including paint, lacquer, enamel, stain, shellac, varnish, polish, liquid filler and liquid lacquer base) or PAINT RELATED MATERIAL (including paint thinning and reducing compound)
L4BN		AT	3					80	3066	PAINT (including paint, lacquer, enamel, stain, shellac, varnish, polish, liquid filler and liquid lacquer base) or PAINT RELATED MATERIAL (including paint thinning and reducing compound)
PxBN(M)		AT	3			CV9 CV10 CV36		20	3070	ETHYLENE OXIDE AND DICHLORODIFLUORO-METHANE MIXTURE with not more than 12.5% ethylene oxide
L4BH	TU15 TE15 TE19	FL	2			CV13 CV28	S2 S9 S19	63	3071	MERCAPTANS, LIQUID, TOXIC, FLAMMABLE, N.O.S. or MERCAPTAN MIXTURE, LIQUID, TOXIC, FLAMMABLE, N.O.S.
			3						3072	LIFE-SAVING APPLIANCES NOT SELF-INFLATING containing dangerous goods as equipment
L4BH	TU15 TE15 TE19	FL	2			CV13 CV28	S2 S9 S19	638	3073	VINYLPYRIDINES, STABILIZED
L21DH	TU4 TU14 TU22 TC1 TE21 TM1	AT	0	V1			S20	X333	3076	ALUMINIUM ALKYL HYDRIDES
SGAV LGBV		AT	3	V13	VV3	CV13		90	3077	ENVIRONMENTALLY HAZARDOUS SUBSTANCE, SOLID, N.O.S.
SGAN		AT	2	V1 V12		CV23		423	3078	CERIUM, turnings or gritty powder
L10CH	TU14 TU15 TE21	FL	1			CV13 CV28	S2 S19	336	3079	METHACRYLONITRILE, STABILIZED
L4BH	TU15 TE15 TE19	FL	2			CV13 CV28	S2 S9 S19	63	3080	ISOCYANATES, TOXIC, FLAMMABLE, N.O.S. or ISOCYANATE SOLUTION, TOXIC, FLAMMABLE, N.O.S.

UN No.	Name and description	Class	Classification code	Packing group	Labels	Special provisions	Limited quantities	Packaging			Portable tanks and bulk containers	
								Packing instructions	Special packing provisions	Mixed packing provisions	Instructions	Special provisions
	3.1.2	2.2	2.2	2.1.1.3	5.2.2	3.3	3.4.6	4.1.4	4.1.4	4.1.10	4.2.5.2 7.3.2	4.2.5.3
(1)	(2)	(3a)	(3b)	(4)	(5)	(6)	(7)	(8)	(9a)	(9b)	(10)	(11)
3082	ENVIRONMENTALLY HAZARDOUS SUBSTANCE, LIQUID, N.O.S.	9	M6	III	9	274	LQ7	P001 IBC03 LP01 R001		MP15	T4	TP1 TP29
3083	PERCHLORYL FLUORIDE	2	2TO		2.3 +5.1		LQ0	P200		MP9	(M)	
3084	CORROSIVE SOLID, OXIDIZING, N.O.S.	8	CO2	I	8 +5.1	274	LQ0	P002		MP18	T6	TP9 TP33
3084	CORROSIVE SOLID, OXIDIZING, N.O.S.	8	CO2	II	8 +5.1	274	LQ23	P002 IBC06		MP10	T3	TP33
3085	OXIDIZING SOLID, CORROSIVE, N.O.S.	5.1	OC2	I	5.1 +8	274	LQ0	P503		MP2		
3085	OXIDIZING SOLID, CORROSIVE, N.O.S.	5.1	OC2	II	5.1 +8	274	LQ11	P002 IBC06		MP2	T3	TP33
3085	OXIDIZING SOLID, CORROSIVE, N.O.S.	5.1	OC2	III	5.1 +8	274	LQ12	P002 IBC08 R001	B3	MP2	T1	TP33
3086	TOXIC SOLID, OXIDIZING, N.O.S.	6.1	TO2	I	6.1 +5.1	274	LQ0	P002		MP18	T6	TP9 TP33
3086	TOXIC SOLID, OXIDIZING, N.O.S.	6.1	TO2	II	6.1 +5.1	274	LQ18	P002 IBC06		MP10	T3	TP33
3087	OXIDIZING SOLID, TOXIC, N.O.S.	5.1	OT2	I	5.1 +6.1	274	LQ0	P503		MP2		
3087	OXIDIZING SOLID, TOXIC, N.O.S.	5.1	OT2	II	5.1 +6.1	274	LQ11	P002 IBC06		MP2	T3	TP33
3087	OXIDIZING SOLID, TOXIC, N.O.S.	5.1	OT2	III	5.1 +6.1	274	LQ12	P002 IBC08 R001	B3	MP2	T1	TP33
3088	SELF-HEATING SOLID, ORGANIC, N.O.S.	4.2	S2	II	4.2	274	LQ0	P410 IBC06		MP14	T3	TP33
3088	SELF-HEATING SOLID, ORGANIC, N.O.S.	4.2	S2	III	4.2	274	LQ0	P002 IBC08 LP02 R001	B3	MP14	T1	TP33
3089	METAL POWDER, FLAMMABLE, N.O.S.	4.1	F3	II	4.1	274 552	LQ8	P002 IBC08	B4	MP11	T3	TP33
3089	METAL POWDER, FLAMMABLE, N.O.S.	4.1	F3	III	4.1	274 552	LQ9	P002 IBC06 R001		MP11	T1	TP33
3090	LITHIUM BATTERIES	9	M4	II	9	188 230 310 636	LQ0	P903 P903a) P903b)				
3091	LITHIUM BATTERIES CONTAINED IN EQUIPMENT or LITHIUM BATTERIES PACKED WITH EQUIPMENT	9	M4	II	9	188 230 636	LQ0	P903 P903a) P903b)				
3092	1-METHOXY-2-PROPANOL	3	F1	III	3		LQ7	P001 IBC03 LP01 R001		MP19	T2	TP1
3093	CORROSIVE LIQUID, OXIDIZING, N.O.S.	8	CO1	I	8 +5.1	274	LQ0	P001		MP8 MP17		
3093	CORROSIVE LIQUID, OXIDIZING, N.O.S.	8	CO1	II	8 +5.1	274	LQ22	P001 IBC02		MP15		
3094	CORROSIVE LIQUID, WATER-REACTIVE, N.O.S.	8	CW1	I	8 +4.3	274	LQ0	P001		MP8 MP17		
3094	CORROSIVE LIQUID, WATER-REACTIVE, N.O.S.	8	CW1	II	8 +4.3	274	LQ22	P001		MP15		
3095	CORROSIVE SOLID, SELF-HEATING, N.O.S.	8	CS2	I	8 +4.2	274	LQ0	P002		MP18	T6	TP9 TP33

ADR tank		Vehicle for tank carriage	Transport category	Special provisions for carriage				Hazard identifi-cation No.	UN No.	Name and description
Tank code	Special provisions			Packages	Bulk	Loading, unloading and handling	Operation			
4.3	4.3.5, 6.8.4	9.1.1.2	1.1.3.6	7.2.4	7.3.3	7.5.11	8.5	5.3.2.3		3.1.2
(12)	(13)	(14)	(15)	(16)	(17)	(18)	(19)	(20)	(1)	(2)
LGBV		AT	3			CV13		90	3082	ENVIRONMENTALLY HAZARDOUS SUBSTANCE, LIQUID, N.O.S.
PxBH(M)		AT	1			CV9 CV10 CV36	S7 S17	265	3083	PERCHLORYL FLUORIDE
S10AN L10BH		AT	1			CV24	S20	885	3084	CORROSIVE SOLID, OXIDIZING, N.O.S.
SGAN L4BN		AT	2	V11 V12		CV24		85	3084	CORROSIVE SOLID, OXIDIZING, N.O.S.
			1			CV24	S20		3085	OXIDIZING SOLID, CORROSIVE, N.O.S.
SGAN	TU3	AT	2	V11 V12		CV24		58	3085	OXIDIZING SOLID, CORROSIVE, N.O.S.
SGAN	TU3	AT	3			CV24		58	3085	OXIDIZING SOLID, CORROSIVE, N.O.S.
S10AH L10CH	TU14 TU15 TE19 TE21	AT	1			CV1 CV13 CV28	S9 S17	665	3086	TOXIC SOLID, OXIDIZING, N.O.S.
SGAH L4BH	TU15 TE15 TE19	AT	2	V11 V12		CV13 CV28	S9 S19	65	3086	TOXIC SOLID, OXIDIZING, N.O.S.
			1			CV24 CV28	S20		3087	OXIDIZING SOLID, TOXIC, N.O.S.
SGAN	TU3	AT	2	V11 V12		CV24 CV28		56	3087	OXIDIZING SOLID, TOXIC, N.O.S.
SGAN	TU3	AT	3			CV24 CV28		56	3087	OXIDIZING SOLID, TOXIC, N.O.S.
SGAV		AT	2	V1 V12				40	3088	SELF-HEATING SOLID, ORGANIC, N.O.S.
SGAV		AT	3	V1				40	3088	SELF-HEATING SOLID, ORGANIC, N.O.S.
SGAN		AT	2	V11				40	3089	METAL POWDER, FLAMMABLE, N.O.S.
SGAV		AT	3	V12	VV1			40	3089	METAL POWDER, FLAMMABLE, N.O.S.
			2						3090	LITHIUM BATTERIES
			2						3091	LITHIUM BATTERIES CONTAINED IN EQUIPMENT or LITHIUM BATTERIES PACKED WITH EQUIPMENT
LGBF		FL	3				S2	30	3092	1-METHOXY-2-PROPANOL
L10BH		AT	1			CV24	S20	885	3093	CORROSIVE LIQUID, OXIDIZING, N.O.S.
L4BN		AT	2			CV24		85	3093	CORROSIVE LIQUID, OXIDIZING, N.O.S.
L10BH		AT	1				S20	823	3094	CORROSIVE LIQUID, WATER-REACTIVE, N.O.S.
L4BN		AT	2					823	3094	CORROSIVE LIQUID, WATER-REACTIVE, N.O.S.
S10AN		AT	1				S20	884	3095	CORROSIVE SOLID, SELF-HEATING, N.O.S.

UN No.	Name and description	Class	Classification code	Packing group	Labels	Special provisions	Limited quantities	Packaging			Portable tanks and bulk containers	
								Packing instructions	Special packing provisions	Mixed packing provisions	Instructions	Special provisions
	3.1.2	2.2	2.2	2.1.1.3	5.2.2	3.3	3.4.6	4.1.4	4.1.4	4.1.10	4.2.5.2 7.3.2	4.2.5.3
(1)	(2)	(3a)	(3b)	(4)	(5)	(6)	(7)	(8)	(9a)	(9b)	(10)	(11)
3095	CORROSIVE SOLID, SELF-HEATING, N.O.S.	8	CS2	II	8 +4.2	274	LQ23	P002 IBC06		MP10	T3	TP33
3096	CORROSIVE SOLID, WATER-REACTIVE, N.O.S.	8	CW2	I	8 +4.3	274	LQ0	P002		MP18	T6	TP9 TP33
3096	CORROSIVE SOLID, WATER-REACTIVE, N.O.S.	8	CW2	II	8 +4.3	274	LQ23	P002 IBC06		MP10	T3	TP33
3097	FLAMMABLE SOLID, OXIDIZING, N.O.S.	4.1	FO	CARRIAGE PROHIBITED								
3098	OXIDIZING LIQUID, CORROSIVE, N.O.S.	5.1	OC1	I	5.1 +8	274	LQ0	P502		MP2		
3098	OXIDIZING LIQUID, CORROSIVE, N.O.S.	5.1	OC1	II	5.1 +8	274	LQ10	P504 IBC01		MP2		
3098	OXIDIZING LIQUID, CORROSIVE, N.O.S.	5.1	OC1	III	5.1 +8	274	LQ13	P504 IBC02 R001		MP2		
3099	OXIDIZING LIQUID, TOXIC, N.O.S.	5.1	OT1	I	5.1 +6.1	274	LQ0	P502		MP2		
3099	OXIDIZING LIQUID, TOXIC, N.O.S.	5.1	OT1	II	5.1 +6.1	274	LQ10	P504 IBC01		MP2		
3099	OXIDIZING LIQUID, TOXIC, N.O.S.	5.1	OT1	III	5.1 +6.1	274	LQ13	P504 IBC02 R001		MP2		
3100	OXIDIZING SOLID, SELF-HEATING, N.O.S.	5.1	OS	CARRIAGE PROHIBITED								
3101	ORGANIC PEROXIDE TYPE B, LIQUID	5.2	P1		5.2 +1	122 181 274	LQ14	P520		MP4		
3102	ORGANIC PEROXIDE TYPE B, SOLID	5.2	P1		5.2 +1	122 181 274	LQ15	P520		MP4		
3103	ORGANIC PEROXIDE TYPE C, LIQUID	5.2	P1		5.2	122 274	LQ14	P520		MP4		
3104	ORGANIC PEROXIDE TYPE C, SOLID	5.2	P1		5.2	122 274	LQ15	P520		MP4		
3105	ORGANIC PEROXIDE TYPE D, LIQUID	5.2	P1		5.2	122 274	LQ16	P520		MP4		
3106	ORGANIC PEROXIDE TYPE D, SOLID	5.2	P1		5.2	122 274	LQ11	P520		MP4		
3107	ORGANIC PEROXIDE TYPE E, LIQUID	5.2	P1		5.2	122 274	LQ16	P520		MP4		
3108	ORGANIC PEROXIDE TYPE E, SOLID	5.2	P1		5.2	122 274	LQ11	P520		MP4		
3109	ORGANIC PEROXIDE TYPE F, LIQUID	5.2	P1		5.2	122 274	LQ16	P520 IBC520		MP4	T23	
3110	ORGANIC PEROXIDE TYPE F, SOLID	5.2	P1		5.2	122 274	LQ11	P520 IBC520		MP4	T23	TP33
3111	ORGANIC PEROXIDE TYPE B, LIQUID, TEMPERATURE CONTROLLED	5.2	P2		5.2 +1	122 181 274	LQ0	P520		MP4		

ADR tank		Vehicle for tank carriage	Transport category	Special provisions for carriage				Hazard identification No.	UN No.	Name and description
Tank code	Special provisions			Packages	Bulk	Loading, unloading and handling	Operation			
4.3	4.3.5, 6.8.4	9.1.1.2	1.1.3.6	7.2.4	7.3.3	7.5.11	8.5	5.3.2.3		3.1.2
(12)	(13)	(14)	(15)	(16)	(17)	(18)	(19)	(20)	(1)	(2)
SGAN		AT	2	V11 V12				84	3095	CORROSIVE SOLID, SELF-HEATING, N.O.S.
S10AN L10BH		AT	1				S20	842	3096	CORROSIVE SOLID, WATER-REACTIVE, N.O.S.
SGAN L4BN		AT	2	V11 V12				842	3096	CORROSIVE SOLID, WATER-REACTIVE, N.O.S.
CARRIAGE PROHIBITED									3097	FLAMMABLE SOLID, OXIDIZING, N.O.S.
			1			CV24	S20		3098	OXIDIZING LIQUID, CORROSIVE, N.O.S.
			2			CV24			3098	OXIDIZING LIQUID, CORROSIVE, N.O.S.
			3			CV24			3098	OXIDIZING LIQUID, CORROSIVE, N.O.S.
			1			CV24 CV28	S20		3099	OXIDIZING LIQUID, TOXIC, N.O.S.
			2			CV24 CV28			3099	OXIDIZING LIQUID, TOXIC, N.O.S.
			3			CV24 CV28			3099	OXIDIZING LIQUID, TOXIC, N.O.S.
CARRIAGE PROHIBITED									3100	OXIDIZING SOLID, SELF-HEATING, N.O.S.
			1	V1 V5		CV15 CV20 CV22 CV24	S9 S17		3101	ORGANIC PEROXIDE TYPE B, LIQUID
			1	V1 V5		CV15 CV20 CV22 CV24	S9 S17		3102	ORGANIC PEROXIDE TYPE B, SOLID
			1	V1		CV15 CV20 CV22 CV24	S8 S18		3103	ORGANIC PEROXIDE TYPE C, LIQUID
			1	V1		CV15 CV20 CV22 CV24	S8 S18		3104	ORGANIC PEROXIDE TYPE C, SOLID
			2	V1		CV15 CV22 CV24	S19		3105	ORGANIC PEROXIDE TYPE D, LIQUID
			2	V1		CV15 CV22 CV24	S19		3106	ORGANIC PEROXIDE TYPE D, SOLID
			2	V1		CV15 CV22 CV24			3107	ORGANIC PEROXIDE TYPE E, LIQUID
			2	V1		CV15 CV22 CV24			3108	ORGANIC PEROXIDE TYPE E, SOLID
L4BN(+)	TU3 TU13 TU30 TE12 TA2 TM4	AT	2	V1		CV15 CV22 CV24		539	3109	ORGANIC PEROXIDE TYPE F, LIQUID
S4AN(+)	TU3 TU13 TU30 TE12 TA2 TM4	AT	2	V1		CV15 CV22 CV24		539	3110	ORGANIC PEROXIDE TYPE F, SOLID
			1	V8		CV15 CV20 CV21 CV22 CV24	S4 S9 S16		3111	ORGANIC PEROXIDE TYPE B, LIQUID, TEMPERATURE CONTROLLED

UN No.	Name and description	Class	Classification code	Packing group	Labels	Special provisions	Limited quantities	Packaging			Portable tanks and bulk containers	
								Packing instructions	Special packing provisions	Mixed packing provisions	Instructions	Special provisions
	3.1.2	2.2	2.2	2.1.1.3	5.2.2	3.3	3.4.6	4.1.4	4.1.4	4.1.10	4.2.5.2 7.3.2	4.2.5.3
(1)	(2)	(3a)	(3b)	(4)	(5)	(6)	(7)	(8)	(9a)	(9b)	(10)	(11)
3112	ORGANIC PEROXIDE TYPE B, SOLID, TEMPERATURE CONTROLLED	5.2	P2		5.2 +1	122 181 274	LQ0	P520		MP4		
3113	ORGANIC PEROXIDE TYPE C, LIQUID, TEMPERATURE CONTROLLED	5.2	P2		5.2	122 274	LQ0	P520		MP4		
3114	ORGANIC PEROXIDE TYPE C, SOLID, TEMPERATURE CONTROLLED	5.2	P2		5.2	122 274	LQ0	P520		MP4		
3115	ORGANIC PEROXIDE TYPE D, LIQUID, TEMPERATURE CONTROLLED	5.2	P2		5.2	122 274	LQ0	P520		MP4		
3116	ORGANIC PEROXIDE TYPE D, SOLID, TEMPERATURE CONTROLLED	5.2	P2		5.2	122 274	LQ0	P520		MP4		
3117	ORGANIC PEROXIDE TYPE E, LIQUID, TEMPERATURE CONTROLLED	5.2	P2		5.2	122 274	LQ0	P520		MP4		
3118	ORGANIC PEROXIDE TYPE E, SOLID, TEMPERATURE CONTROLLED	5.2	P2		5.2	122 274	LQ0	P520		MP4		
3119	ORGANIC PEROXIDE TYPE F, LIQUID, TEMPERATURE CONTROLLED	5.2	P2		5.2	122 274	LQ0	P520 IBC520		MP4	T23	
3120	ORGANIC PEROXIDE TYPE F, SOLID, TEMPERATURE CONTROLLED	5.2	P2		5.2	122 274	LQ0	P520 IBC520		MP4	T23	TP33
3121	OXIDIZING SOLID, WATER-REACTIVE, N.O.S.	5.1	OW	CARRIAGE PROHIBITED								
3122	TOXIC LIQUID, OXIDIZING, N.O.S.	6.1	TO1	I	6.1 +5.1	274 315	LQ0	P001		MP8 MP17		
3122	TOXIC LIQUID, OXIDIZING, N.O.S.	6.1	TO1	II	6.1 +5.1	274	LQ17	P001 IBC02		MP15		
3123	TOXIC LIQUID, WATER-REACTIVE, N.O.S.	6.1	TW1	I	6.1 +4.3	274 315	LQ0	P099		MP8 MP17		
3123	TOXIC LIQUID, WATER-REACTIVE, N.O.S.	6.1	TW1	II	6.1 +4.3	274	LQ17	P001 IBC02		MP15		
3124	TOXIC SOLID, SELF-HEATING, N.O.S.	6.1	TS	I	6.1 +4.2	274	LQ0	P002		MP18	T6	TP9 TP33
3124	TOXIC SOLID, SELF-HEATING, N.O.S.	6.1	TS	II	6.1 +4.2	274	LQ18	P002 IBC06		MP10	T3	TP33
3125	TOXIC SOLID, WATER-REACTIVE, N.O.S.	6.1	TW2	I	6.1 +4.3	274	LQ0	P099		MP18	T6	TP9 TP33
3125	TOXIC SOLID, WATER-REACTIVE, N.O.S.	6.1	TW2	II	6.1 +4.3	274	LQ18	P002 IBC06		MP10	T3	TP33
3126	SELF-HEATING SOLID, CORROSIVE, ORGANIC, N.O.S.	4.2	SC2	II	4.2 +8	274	LQ0	P410 IBC05		MP14	T3	TP33

ADR tank		Vehicle for tank carriage	Transport category	Special provisions for carriage				Hazard identification No.	UN No.	Name and description
Tank code	Special provisions			Packages	Bulk	Loading, unloading and handling	Operation			
4.3	4.3.5, 6.8.4	9.1.1.2	1.1.3.6	7.2.4	7.3.3	7.5.11	8.5	5.3.2.3		3.1.2
(12)	(13)	(14)	(15)	(16)	(17)	(18)	(19)	(20)	(1)	(2)
			1	V8		CV15 CV20 CV21 CV22 CV24	S4 S9 S16		3112	ORGANIC PEROXIDE TYPE B, SOLID, TEMPERATURE CONTROLLED
			1	V8		CV15 CV20 CV21 CV22 CV24	S4 S8 S17		3113	ORGANIC PEROXIDE TYPE C, LIQUID, TEMPERATURE CONTROLLED
			1	V8		CV15 CV20 CV21 CV22 CV24	S4 S8 S17		3114	ORGANIC PEROXIDE TYPE C, SOLID, TEMPERATURE CONTROLLED
			1	V8		CV15 CV21 CV22 CV24	S4 S18		3115	ORGANIC PEROXIDE TYPE D, LIQUID, TEMPERATURE CONTROLLED
			1	V8		CV15 CV21 CV22 CV24	S4 S18		3116	ORGANIC PEROXIDE TYPE D, SOLID, TEMPERATURE CONTROLLED
			1	V8		CV15 CV21 CV22 CV24	S4 S19		3117	ORGANIC PEROXIDE TYPE E, LIQUID, TEMPERATURE CONTROLLED
			1	V8		CV15 CV21 CV22 CV24	S4 S19		3118	ORGANIC PEROXIDE TYPE E, SOLID, TEMPERATURE CONTROLLED
L4BN(+)	TU3 TU13 TU30 TE12 TA2 TM4	AT	1	V8		CV15 CV21 CV22 CV24	S4	539	3119	ORGANIC PEROXIDE TYPE F, LIQUID, TEMPERATURE CONTROLLED
S4AN(+)	TU3 TU13 TU30 TE12 TA2 TM4	AT	1	V8		CV15 CV21 CV22 CV24	S4	539	3120	ORGANIC PEROXIDE TYPE F, SOLID, TEMPERATURE CONTROLLED
CARRIAGE PROHIBITED									3121	OXIDIZING SOLID, WATER-REACTIVE, N.O.S.
L10CH	TU14 TU15 TE19 TE21	AT	1			CV1 CV13 CV28	S9 S17	665	3122	TOXIC LIQUID, OXIDIZING, N.O.S.
L4BH	TU15 TE15 TE19	AT	2			CV13 CV28	S9 S19	65	3122	TOXIC LIQUID, OXIDIZING, N.O.S.
L10CH	TU14 TU15 TE19 TE21	AT	1			CV1 CV13 CV28	S9 S17	623	3123	TOXIC LIQUID, WATER-REACTIVE, N.O.S.
L4BH	TU15 TE15 TE19	AT	2			CV13 CV28	S9 S19	623	3123	TOXIC LIQUID, WATER-REACTIVE, N.O.S.
S10AH L10CH	TU14 TU15 TE19 TE21	AT	1			CV1 CV13 CV28	S9 S17	664	3124	TOXIC SOLID, SELF-HEATING, N.O.S.
SGAH L4BH	TU15 TE15 TE19	AT	2	V11 V12		CV13 CV28	S9 S19	64	3124	TOXIC SOLID, SELF-HEATING, N.O.S.
S10AH L10CH	TU14 TU15 TE19 TE21	AT	1			CV1 CV13 CV28	S9 S17	642	3125	TOXIC SOLID, WATER-REACTIVE, N.O.S.
SGAH L4BH	TU15 TE15 TE19	AT	2	V11 V12		CV13 CV28	S9 S19	642	3125	TOXIC SOLID, WATER-REACTIVE, N.O.S.
SGAN		AT	2	V1				48	3126	SELF-HEATING SOLID, CORROSIVE, ORGANIC, N.O.S.

UN No.	Name and description	Class	Classification code	Packing group	Labels	Special provisions	Limited quantities	Packaging			Portable tanks and bulk containers	
								Packing instructions	Special packing provisions	Mixed packing provisions	Instructions	Special provisions
	3.1.2	2.2	2.2	2.1.1.3	5.2.2	3.3	3.4.6	4.1.4	4.1.4	4.1.10	4.2.5.2 7.3.2	4.2.5.3
(1)	(2)	(3a)	(3b)	(4)	(5)	(6)	(7)	(8)	(9a)	(9b)	(10)	(11)
3126	SELF-HEATING SOLID, CORROSIVE, ORGANIC, N.O.S.	4.2	SC2	III	4.2 +8	274	LQ0	P002 IBC08 R001	B3	MP14	T1	TP33
3127	SELF-HEATING SOLID, OXIDIZING, N.O.S	4.2	SO	CARRIAGE PROHIBITED								
3128	SELF-HEATING SOLID, TOXIC, ORGANIC, N.O.S.	4.2	ST2	II	4.2 +6.1	274	LQ0	P410 IBC05		MP14		
3128	SELF-HEATING SOLID, TOXIC, ORGANIC, N.O.S.	4.2	ST2	III	4.2 +6.1	274	LQ0	P002 IBC08 R001	B3	MP14	T1	TP33
3129	WATER-REACTIVE LIQUID, CORROSIVE, N.O.S.	4.3	WC1	I	4.3 +8	274	LQ0	P402 PR1		MP2		
3129	WATER-REACTIVE LIQUID, CORROSIVE, N.O.S.	4.3	WC1	II	4.3 +8	274	LQ10	P402 IBC01 PR1		MP15		
3129	WATER-REACTIVE LIQUID, CORROSIVE, N.O.S.	4.3	WC1	III	4.3 +8	274	LQ13	P001 IBC02 R001		MP15		
3130	WATER-REACTIVE LIQUID, TOXIC, N.O.S.	4.3	WT1	I	4.3 +6.1	274	LQ0	P402 PR1	RR4	MP2		
3130	WATER-REACTIVE LIQUID, TOXIC, N.O.S.	4.3	WT1	II	4.3 +6.1	274	LQ10	P402 IBC01 PR1	RR4 BB1	MP15		
3130	WATER-REACTIVE LIQUID, TOXIC, N.O.S.	4.3	WT1	III	4.3 +6.1	274	LQ13	P001 IBC02 R001		MP15		
3131	WATER-REACTIVE SOLID, CORROSIVE, N.O.S.	4.3	WC2	I	4.3 +8	274	LQ0	P403		MP2		
3131	WATER-REACTIVE SOLID, CORROSIVE, N.O.S.	4.3	WC2	II	4.3 +8	274	LQ11	P410 IBC06		MP14	T3	TP33
3131	WATER-REACTIVE SOLID, CORROSIVE, N.O.S.	4.3	WC2	III	4.3 +8	274	LQ12	P410 IBC08 R001	B4	MP14	T1	TP33
3132	WATER-REACTIVE SOLID, FLAMMABLE, N.O.S.	4.3	WF2	CARRIAGE PROHIBITED								
3133	WATER-REACTIVE SOLID, OXIDIZING, N.O.S.	4.3	WO	CARRIAGE PROHIBITED								
3134	WATER-REACTIVE SOLID, TOXIC, N.O.S.	4.3	WT2	I	4.3 +6.1	274	LQ0	P403		MP2		
3134	WATER-REACTIVE SOLID, TOXIC, N.O.S.	4.3	WT2	II	4.3 +6.1	274	LQ11	P410 IBC05		MP14	T3	TP33
3134	WATER-REACTIVE SOLID, TOXIC, N.O.S.	4.3	WT2	III	4.3 +6.1	274	LQ12	P410 IBC08 R001	B4	MP14	T1	TP33
3135	WATER-REACTIVE SOLID, SELF-HEATING, N.O.S.	4.3	WS	CARRIAGE PROHIBITED								
3136	TRIFLUOROMETHANE, REFRIGERATED LIQUID	2	3A		2.2	593	LQ1	P203		MP9	T75	TP5
3137	OXIDIZING SOLID, FLAMMABLE, N.O.S.	5.1	OF	CARRIAGE PROHIBITED								
3138	ETHYLENE, ACETYLENE AND PROPYLENE MIXTURE, REFRIGERATED LIQUID containing at least 71.5% ethylene with not more than 22.5% acetylene and not more than 6% propylene	2	3F		2.1		LQ0	P203		MP9	T75	TP5
3139	OXIDIZING LIQUID, N.O.S.	5.1	O1	I	5.1	274	LQ0	P502		MP2		

ADR tank		Vehicle for tank carriage	Transport category	Special provisions for carriage				Hazard identifi-cation No.	UN No.	Name and description
Tank code	Special provisions			Packages	Bulk	Loading, unloading and handling	Operation			
4.3	4.3.5, 6.8.4	9.1.1.2	1.1.3.6	7.2.4	7.3.3	7.5.11	8.5	5.3.2.3		3.1.2
(12)	(13)	(14)	(15)	(16)	(17)	(18)	(19)	(20)	(1)	(2)
SGAN		AT	3	V1				48	3126	SELF-HEATING SOLID, CORROSIVE, ORGANIC, N.O.S.
CARRIAGE PROHIBITED									3127	SELF-HEATING SOLID, OXIDIZING, N.O.S
SGAN		AT	2	V1		CV28		46	3128	SELF-HEATING SOLID, TOXIC, ORGANIC, N.O.S.
SGAN		AT	3	V1		CV28		46	3128	SELF-HEATING SOLID, TOXIC, ORGANIC, N.O.S.
L10DH	TU14 TE21 TM2	AT	0	V1		CV23	S20	X382	3129	WATER-REACTIVE LIQUID, CORROSIVE, N.O.S.
L4DH	TU14 TE21 TM2	AT	0	V1		CV23		382	3129	WATER-REACTIVE LIQUID, CORROSIVE, N.O.S.
L4DH	TU14 TE21 TM2	AT	0	V1		CV23		382	3129	WATER-REACTIVE LIQUID, CORROSIVE, N.O.S.
L10DH	TU14 TE21 TM2	AT	0	V1		CV23 CV28	S20	X362	3130	WATER-REACTIVE LIQUID, TOXIC, N.O.S.
L4DH	TU14 TE21 TM2	AT	0	V1		CV23 CV28		362	3130	WATER-REACTIVE LIQUID, TOXIC, N.O.S.
L4DH	TU14 TE21 TM2	AT	0	V1		CV23 CV28		362	3130	WATER-REACTIVE LIQUID, TOXIC, N.O.S.
			0	V1		CV23	S20		3131	WATER-REACTIVE SOLID, CORROSIVE, N.O.S.
SGAN		AT	0	V1 V12		CV23		482	3131	WATER-REACTIVE SOLID, CORROSIVE, N.O.S.
SGAN		AT	0	V1		CV23		482	3131	WATER-REACTIVE SOLID, CORROSIVE, N.O.S.
CARRIAGE PROHIBITED									3132	WATER-REACTIVE SOLID, FLAMMABLE, N.O.S.
CARRIAGE PROHIBITED									3133	WATER-REACTIVE SOLID, OXIDIZING, N.O.S.
			0	V1		CV23 CV28	S20		3134	WATER-REACTIVE SOLID, TOXIC, N.O.S.
SGAN		AT	0	V1		CV23 CV28		462	3134	WATER-REACTIVE SOLID, TOXIC, N.O.S.
SGAN		AT	0	V1		CV23 CV28		462	3134	WATER-REACTIVE SOLID, TOXIC, N.O.S.
CARRIAGE PROHIBITED									3135	WATER-REACTIVE SOLID, SELF-HEATING, N.O.S.
RxBN	TU19	AT	3	V5		CV9 CV11 CV36	S20	22	3136	TRIFLUOROMETHANE, REFRIGERATED LIQUID
CARRIAGE PROHIBITED									3137	OXIDIZING SOLID, FLAMMABLE, N.O.S.
RxBN	TU18	FL	2	V5		CV9 CV11 CV36	S2 S17	223	3138	ETHYLENE, ACETYLENE AND PROPYLENE MIXTURE, REFRIGERATED LIQUID containing at least 71.5% ethylene with not more than 22.5% acetylene and not more than 6% propylene
			1			CV24	S20		3139	OXIDIZING LIQUID, N.O.S.

UN No.	Name and description	Class	Classification code	Packing group	Labels	Special provisions	Limited quantities	Packaging			Portable tanks and bulk containers	
								Packing instructions	Special packing provisions	Mixed packing provisions	Instructions	Special provisions
	3.1.2	2.2	2.2	2.1.1.3	5.2.2	3.3	3.4.6	4.1.4	4.1.4	4.1.10	4.2.5.2 7.3.2	4.2.5.3
(1)	(2)	(3a)	(3b)	(4)	(5)	(6)	(7)	(8)	(9a)	(9b)	(10)	(11)
3139	OXIDIZING LIQUID, N.O.S.	5.1	O1	II	5.1	274	LQ10	P504 IBC02		MP2		
3139	OXIDIZING LIQUID, N.O.S.	5.1	O1	III	5.1	274	LQ13	P504 IBC02 R001		MP2		
3140	ALKALOIDS, LIQUID, N.O.S. or ALKALOID SALTS, LIQUID, N.O.S.	6.1	T1	I	6.1	43 274	LQ0	P001		MP8 MP17		
3140	ALKALOIDS, LIQUID, N.O.S. or ALKALOID SALTS, LIQUID, N.O.S.	6.1	T1	II	6.1	43 274	LQ17	P001 IBC02		MP15		
3140	ALKALOIDS, LIQUID, N.O.S. or ALKALOID SALTS, LIQUID, N.O.S.	6.1	T1	III	6.1	43 274	LQ19	P001 IBC03 LP01 R001		MP15		
3141	ANTIMONY COMPOUND, INORGANIC, LIQUID, N.O.S.	6.1	T4	III	6.1	45 274 512	LQ19	P001 IBC03 LP01 R001		MP15		
3142	DISINFECTANT, LIQUID, TOXIC, N.O.S.	6.1	T1	I	6.1	274	LQ0	P001		MP8 MP17		
3142	DISINFECTANT, LIQUID, TOXIC, N.O.S.	6.1	T1	II	6.1	274	LQ17	P001 IBC02		MP15		
3142	DISINFECTANT, LIQUID, TOXIC, N.O.S.	6.1	T1	III	6.1	274	LQ19	P001 IBC03 LP01 R001		MP15		
3143	DYE, SOLID, TOXIC, N.O.S. or DYE INTERMEDIATE, SOLID, TOXIC, N.O.S.	6.1	T2	I	6.1	274	LQ0	P002 IBC07		MP18	T6	TP9 TP33
3143	DYE, SOLID, TOXIC, N.O.S. or DYE INTERMEDIATE, SOLID, TOXIC, N.O.S.	6.1	T2	II	6.1	274	LQ18	P002 IBC08	B4	MP10	T3	TP33
3143	DYE, SOLID, TOXIC, N.O.S. or DYE INTERMEDIATE, SOLID, TOXIC, N.O.S.	6.1	T2	III	6.1	274	LQ9	P002 IBC08 LP02 R001	B3	MP10	T1	TP33
3144	NICOTINE COMPOUND, LIQUID, N.O.S. or NICOTINE PREPARATION, LIQUID, N.O.S.	6.1	T1	I	6.1	43 274	LQ0	P001		MP8 MP17		
3144	NICOTINE COMPOUND, LIQUID, N.O.S. or NICOTINE PREPARATION, LIQUID, N.O.S.	6.1	T1	II	6.1	43 274	LQ17	P001 IBC02		MP15		
3144	NICOTINE COMPOUND, LIQUID, N.O.S. or NICOTINE PREPARATION, LIQUID, N.O.S.	6.1	T1	III	6.1	43 274	LQ19	P001 IBC03 LP01 R001		MP15		
3145	ALKYLPHENOLS, LIQUID, N.O.S. (including C_2-C_{12} homologues)	8	C3	I	8	274	LQ0	P001		MP8 MP17	T14	TP2 TP9
3145	ALKYLPHENOLS, LIQUID, N.O.S. (including C_2-C_{12} homologues)	8	C3	II	8	274	LQ22	P001 IBC02		MP15	T11	TP2 TP27
3145	ALKYLPHENOLS, LIQUID, N.O.S. (including C_2-C_{12} homologues)	8	C3	III	8	274	LQ19	P001 IBC03 LP01 R001		MP15	T7	TP1 TP28

ADR tank		Vehicle for tank carriage	Transport category	Special provisions for carriage				Hazard identifi-cation No.	UN No.	Name and description
Tank code	Special provisions			Packages	Bulk	Loading, unloading and handling	Operation			
4.3	4.3.5, 6.8.4	9.1.1.2	1.1.3.6	7.2.4	7.3.3	7.5.11	8.5	5.3.2.3		3.1.2
(12)	(13)	(14)	(15)	(16)	(17)	(18)	(19)	(20)	(1)	(2)
			2			CV24			3139	OXIDIZING LIQUID, N.O.S.
			3			CV24			3139	OXIDIZING LIQUID, N.O.S.
L10CH	TU14 TU15 TE19 TE21	AT	1			CV1 CV13 CV28	S9 S17	66	3140	ALKALOIDS, LIQUID, N.O.S. or ALKALOID SALTS, LIQUID, N.O.S.
L4BH	TU15 TE15 TE19	AT	2			CV13 CV28	S9 S19	60	3140	ALKALOIDS, LIQUID, N.O.S. or ALKALOID SALTS, LIQUID, N.O.S.
L4BH	TU15 TE15 TE19	AT	2			CV13 CV28	S9	60	3140	ALKALOIDS, LIQUID, N.O.S. or ALKALOID SALTS, LIQUID, N.O.S.
L4BH	TU15 TE15 TE19	AT	2			CV13 CV28	S9	60	3141	ANTIMONY COMPOUND, INORGANIC, LIQUID, N.O.S.
L10CH	TU14 TU15 TE19 TE21	AT	1			CV1 CV13 CV28	S9 S17	66	3142	DISINFECTANT, LIQUID, TOXIC, N.O.S.
L4BH	TU15 TE15 TE19	AT	2			CV13 CV28	S9 S19	60	3142	DISINFECTANT, LIQUID, TOXIC, N.O.S.
L4BH	TU15 TE15 TE19	AT	2			CV13 CV28	S9	60	3142	DISINFECTANT, LIQUID, TOXIC, N.O.S.
S10AH L10CH	TU15 TE19	AT	1	V10 V12		CV1 CV13 CV28	S9 S17	66	3143	DYE, SOLID, TOXIC, N.O.S. or DYE INTERMEDIATE, SOLID, TOXIC, N.O.S.
SGAH L4BH	TU15 TE15 TE19	AT	2	V11		CV13 CV28	S9 S19	60	3143	DYE, SOLID, TOXIC, N.O.S. or DYE INTERMEDIATE, SOLID, TOXIC, N.O.S.
SGAH L4BH	TU15 TE15 TE19	AT	2		VV9b	CV13 CV28	S9	60	3143	DYE, SOLID, TOXIC, N.O.S. or DYE INTERMEDIATE, SOLID, TOXIC, N.O.S.
L10CH	TU14 TU15 TE19 TE21	AT	1			CV1 CV13 CV28	S9 S17	66	3144	NICOTINE COMPOUND, LIQUID, N.O.S. or NICOTINE PREPARATION, LIQUID, N.O.S.
L4BH	TU15 TE15 TE19	AT	2			CV13 CV28	S9 S19	60	3144	NICOTINE COMPOUND, LIQUID, N.O.S. or NICOTINE PREPARATION, LIQUID, N.O.S.
L4BH	TU15 TE15 TE19	AT	2			CV13 CV28	S9	60	3144	NICOTINE COMPOUND, LIQUID, N.O.S. or NICOTINE PREPARATION, LIQUID, N.O.S.
L10BH		AT	1				S20	88	3145	ALKYLPHENOLS, LIQUID, N.O.S. (including C_2-C_{12} homologues)
L4BN		AT	2					80	3145	ALKYLPHENOLS, LIQUID, N.O.S. (including C_2-C_{12} homologues)
L4BN		AT	3					80	3145	ALKYLPHENOLS, LIQUID, N.O.S. (including C_2-C_{12} homologues)

UN No.	Name and description	Class	Classification code	Packing group	Labels	Special provisions	Limited quantities	Packaging			Portable tanks and bulk containers	
								Packing instructions	Special packing provisions	Mixed packing provisions	Instructions	Special provisions
	3.1.2	2.2	2.2	2.1.1.3	5.2.2	3.3	3.4.6	4.1.4	4.1.4	4.1.10	4.2.5.2 7.3.2	4.2.5.3
(1)	(2)	(3a)	(3b)	(4)	(5)	(6)	(7)	(8)	(9a)	(9b)	(10)	(11)
3146	ORGANOTIN COMPOUND, SOLID, N.O.S.	6.1	T3	I	6.1	43 274	LQ0	P002 IBC07		MP18	T6	TP9 TP33
3146	ORGANOTIN COMPOUND, SOLID, N.O.S.	6.1	T3	II	6.1	43 274	LQ18	P002 IBC08	B4	MP10	T3	TP33
3146	ORGANOTIN COMPOUND, SOLID, N.O.S.	6.1	T3	III	6.1	43 274	LQ9	P002 IBC08 LP02 R001	B3	MP10	T1	TP33
3147	DYE, SOLID, CORROSIVE, N.O.S. or DYE INTERMEDIATE, SOLID, CORROSIVE, N.O.S.	8	C10	I	8	274	LQ0	P002 IBC07		MP18	T6	TP9 TP33
3147	DYE, SOLID, CORROSIVE, N.O.S. or DYE INTERMEDIATE, SOLID, CORROSIVE, N.O.S.	8	C10	II	8	274	LQ23	P002 IBC08	B4	MP10	T3	TP33
3147	DYE, SOLID, CORROSIVE, N.O.S. or DYE INTERMEDIATE, SOLID, CORROSIVE, N.O.S.	8	C10	III	8	274	LQ24	P002 IBC08 LP02 R001	B3	MP10	T1	TP33
3148	WATER-REACTIVE LIQUID, N.O.S.	4.3	W1	I	4.3	274	LQ0	P402 PR1		MP2		
3148	WATER-REACTIVE LIQUID, N.O.S.	4.3	W1	II	4.3	274	LQ10	P402 IBC01 PR1		MP15		
3148	WATER-REACTIVE LIQUID, N.O.S.	4.3	W1	III	4.3	274	LQ13	P001 IBC02 R001		MP15		
3149	HYDROGEN PEROXIDE AND PEROXYACETIC ACID MIXTURE with acid(s), water and not more than 5% peroxyacetic acid, STABILIZED	5.1	OC1	II	5.1 +8	196 553	LQ10	P504 IBC02	PP10 B5	MP15	T7	TP2 TP6 TP24
3150	DEVICES, SMALL, HYDROCARBON GAS POWERED or HYDROCARBON GAS REFILLS FOR SMALL DEVICES with release device	2	6F		2.1		LQ0	P206		MP9		
3151	POLYHALOGENATED BIPHENYLS, LIQUID or POLYHALOGENATED TERPHENYLS, LIQUID	9	M2	II	9	203 305	LQ26	P906 IBC02		MP15		
3152	POLYHALOGENATED BIPHENYLS, SOLID or POLYHALOGENATED TERPHENYLS, SOLID	9	M2	II	9	203 305	LQ25	P906 IBC08	B4	MP10	T3	TP33
3153	PERFLUORO(METHYL VINYL ETHER)	2	2F		2.1		LQ0	P200		MP9	(M) T50	
3154	PERFLUORO(ETHYL VINYL ETHER)	2	2F		2.1		LQ0	P200		MP9	(M)	
3155	PENTACHLOROPHENOL	6.1	T2	II	6.1	43	LQ18	P002 IBC08	B4	MP10	T3	TP33
3156	COMPRESSED GAS, OXIDIZING, N.O.S.	2	1O		2.2 +5.1	274	LQ0	P200		MP9	(M)	
3157	LIQUEFIED GAS, OXIDIZING, N.O.S.	2	2O		2.2 +5.1	274	LQ0	P200		MP9	(M)	

ADR tank		Vehicle for tank carriage	Transport category	Special provisions for carriage				Hazard identifi-cation No.	UN No.	Name and description
Tank code	Special provisions			Packages	Bulk	Loading, unloading and handling	Operation			
4.3	4.3.5, 6.8.4	9.1.1.2	1.1.3.6	7.2.4	7.3.3	7.5.11	8.5	5.3.2.3		3.1.2
(12)	(13)	(14)	(15)	(16)	(17)	(18)	(19)	(20)	(1)	(2)
S10AH L10CH	TU14 TU15 TE19 TE21	AT	1	V10 V12		CV1 CV13 CV28	S9 S17	66	3146	ORGANOTIN COMPOUND, SOLID, N.O.S.
SGAH L4BH	TU15 TE15 TE19	AT	2	V11		CV13 CV28	S9 S19	60	3146	ORGANOTIN COMPOUND, SOLID, N.O.S.
SGAH L4BH	TU15 TE15 TE19	AT	2		VV9b	CV13 CV28	S9	60	3146	ORGANOTIN COMPOUND, SOLID, N.O.S.
S10AN L10BH		AT	1	V10 V12			S20	88	3147	DYE, SOLID, CORROSIVE, N.O.S. or DYE INTERMEDIATE, SOLID, CORROSIVE, N.O.S.
SGAN L4BN		AT	2	V11				80	3147	DYE, SOLID, CORROSIVE, N.O.S. or DYE INTERMEDIATE, SOLID, CORROSIVE, N.O.S.
SGAV L4BN		AT	3		VV9b			80	3147	DYE, SOLID, CORROSIVE, N.O.S. or DYE INTERMEDIATE, SOLID, CORROSIVE, N.O.S.
L10DH	TU14 TE21 TM2	AT	0	V1		CV23	S20	X323	3148	WATER-REACTIVE LIQUID, N.O.S.
L4DH	TU14 TE21 TM2	AT	0	V1		CV23		323	3148	WATER-REACTIVE LIQUID, N.O.S.
L4DH	TU14 TE21 TM2	AT	0	V1		CV23		323	3148	WATER-REACTIVE LIQUID, N.O.S.
L4BV(+)	TU3 TC2 TE8 TE11 TT1	AT	2			CV24		58	3149	HYDROGEN PEROXIDE AND PEROXYACETIC ACID MIXTURE with acid(s), water and not more than 5% peroxyacetic acid, STABILIZED
			2			CV9	S2		3150	DEVICES, SMALL, HYDROCARBON GAS POWERED or HYDROCARBON GAS REFILLS FOR SMALL DEVICES with release device
L4BH	TU15 TE15	AT	0		VV15	CV1 CV13 CV28	S19	90	3151	POLYHALOGENATED BIPHENYLS, LIQUID or POLYHALOGENATED TERPHENYLS, LIQUID
S4AH L4BH	TU15 TE15	AT	0		VV15	CV1 CV13 CV28	S19	90	3152	POLYHALOGENATED BIPHENYLS, SOLID or POLYHALOGENATED TERPHENYLS, SOLID
PxBN(M)		FL	2			CV9 CV10 CV36	S2 S20	23	3153	PERFLUORO(METHYL VINYL ETHER)
PxBN(M)		FL	2			CV9 CV10 CV36	S2 S20	23	3154	PERFLUORO(ETHYL VINYL ETHER)
SGAH	TU15 TE15 TE19	AT	2	V11		CV13 CV28	S9 S19	60	3155	PENTACHLOROPHENOL
CxBN(M)		AT	3			CV9 CV10 CV36		25	3156	COMPRESSED GAS, OXIDIZING, N.O.S.
PxBN(M)		AT	3			CV9 CV10 CV36		25	3157	LIQUEFIED GAS, OXIDIZING, N.O.S.

UN No.	Name and description	Class	Classification code	Packing group	Labels	Special provisions	Limited quantities	Packaging			Portable tanks and bulk containers	
								Packing instructions	Special packing provisions	Mixed packing provisions	Instructions	Special provisions
	3.1.2	2.2	2.2	2.1.1.3	5.2.2	3.3	3.4.6	4.1.4	4.1.4	4.1.10	4.2.5.2 7.3.2	4.2.5.3
(1)	(2)	(3a)	(3b)	(4)	(5)	(6)	(7)	(8)	(9a)	(9b)	(10)	(11)
3158	GAS, REFRIGERATED LIQUID, N.O.S.	2	3A		2.2	274 593	LQ1	P203		MP9	T75	TP5
3159	1,1,1,2-TETRAFLUORO-ETHANE (REFRIGERANT GAS R 134a)	2	2A		2.2		LQ1	P200		MP9	(M) T50	
3160	LIQUEFIED GAS, TOXIC, FLAMMABLE, N.O.S.	2	2TF		2.3 +2.1	274	LQ0	P200		MP9	(M)	
3161	LIQUEFIED GAS, FLAMMABLE, N.O.S.	2	2F		2.1	274	LQ0	P200		MP9	(M) T50	
3162	LIQUEFIED GAS, TOXIC, N.O.S.	2	2T		2.3	274	LQ0	P200		MP9	(M)	
3163	LIQUEFIED GAS, N.O.S.	2	2A		2.2	274	LQ1	P200		MP9	(M) T50	
3164	ARTICLES, PRESSURIZED, PNEUMATIC or HYDRAULIC (containing non-flammable gas)	2	6A		2.2	283 594	LQ0	P003		MP9		
3165	AIRCRAFT HYDRAULIC POWER UNIT FUEL TANK (containing a mixture of anhydrous hydrazine and methylhydrazine) (M86 fuel)	3	FTC	I	3 +6.1 +8		LQ0	P301		MP7		
3166	Engine, internal combustion or vehicle, flammable gas powered or vehicle, flammable liquid powered	9	M11	NOT SUBJECT TO ADR								
3167	GAS SAMPLE, NON-PRESSURIZED, FLAMMABLE, N.O.S., not refrigerated liquid	2	7F		2.1	274	LQ0	P201		MP9		
3168	GAS SAMPLE, NON-PRESSURIZED, TOXIC, FLAMMABLE, N.O.S., not refrigerated liquid	2	7TF		2.3 +2.1	274	LQ0	P201		MP9		
3169	GAS SAMPLE, NON-PRESSURIZED, TOXIC, N.O.S., not refrigerated liquid	2	7T		2.3	274	LQ0	P201		MP9		
3170	ALUMINIUM SMELTING BY-PRODUCTS or ALUMINIUM REMELTING BY-PRODUCTS	4.3	W2	II	4.3	244	LQ11	P410 IBC07		MP14	T3 BK1 BK2	TP33
3170	ALUMINIUM SMELTING BY-PRODUCTS or ALUMINIUM REMELTING BY-PRODUCTS	4.3	W2	III	4.3	244	LQ12	P002 IBC08 R001	B4	MP14	T1 BK1 BK2	TP33
3171	Battery-powered vehicle or Battery-powered equipment	9	M11	NOT SUBJECT TO ADR								
3172	TOXINS, EXTRACTED FROM LIVING SOURCES, LIQUID, N.O.S.	6.1	T1	I	6.1	210 274	LQ0	P001		MP8 MP17		
3172	TOXINS, EXTRACTED FROM LIVING SOURCES, LIQUID, N.O.S.	6.1	T1	II	6.1	210 274	LQ17	P001 IBC02		MP15		

ADR tank		Vehicle for tank carriage	Transport category	Special provisions for carriage				Hazard identification No.	UN No.	Name and description
Tank code	Special provisions			Packages	Bulk	Loading, unloading and handling	Operation			
4.3	4.3.5, 6.8.4	9.1.1.2	1.1.3.6	7.2.4	7.3.3	7.5.11	8.5	5.3.2.3		3.1.2
(12)	(13)	(14)	(15)	(16)	(17)	(18)	(19)	(20)	(1)	(2)
RxBN	TU19	AT	3	V5		CV9 CV11 CV36	S20	22	3158	GAS, REFRIGERATED LIQUID, N.O.S.
PxBN(M)		AT	3			CV9 CV10 CV36		20	3159	1,1,1,2-TETRAFLUORO-ETHANE (REFRIGERANT GAS R 134a)
PxBH(M)	TU6	FL	1			CV9 CV10 CV36	S2 S7 S17	263	3160	LIQUEFIED GAS, TOXIC, FLAMMABLE, N.O.S.
PxBN(M)		FL	2			CV9 CV10 CV36	S2 S20	23	3161	LIQUEFIED GAS, FLAMMABLE, N.O.S.
PxBH(M)	TU6	AT	1			CV9 CV10 CV36	S7 S17	26	3162	LIQUEFIED GAS, TOXIC, N.O.S.
PxBN(M)		AT	3			CV9 CV10 CV36		20	3163	LIQUEFIED GAS, N.O.S.
			3			CV9			3164	ARTICLES, PRESSURIZED, PNEUMATIC or HYDRAULIC (containing non-flammable gas)
			1			CV13 CV28	S2 S19		3165	AIRCRAFT HYDRAULIC POWER UNIT FUEL TANK (containing a mixture of anhydrous hydrazine and methylhydrazine) (M86 fuel)
NOT SUBJECT TO ADR									3166	Engine, internal combustion or vehicle, flammable gas powered or vehicle, flammable liquid powered
			2			CV9	S2		3167	GAS SAMPLE, NON-PRESSURIZED, FLAMMABLE, N.O.S., not refrigerated liquid
			1			CV9	S2 S7		3168	GAS SAMPLE, NON-PRESSURIZED, TOXIC, FLAMMABLE, N.O.S., not refrigerated liquid
			1			CV9	S7		3169	GAS SAMPLE, NON-PRESSURIZED, TOXIC, N.O.S., not refrigerated liquid
SGAN		AT	2	V1 V12	VV3	CV23		423	3170	ALUMINIUM SMELTING BY-PRODUCTS or ALUMINIUM REMELTING BY-PRODUCTS
SGAN		AT	3	V1	VV1 VV5	CV23		423	3170	ALUMINIUM SMELTING BY-PRODUCTS or ALUMINIUM REMELTING BY-PRODUCTS
NOT SUBJECT TO ADR									3171	Battery-powered vehicle or Battery-powered equipment
L10CH	TU14 TU15 TE19 TE21	AT	1			CV1 CV13 CV28	S9 S17	66	3172	TOXINS, EXTRACTED FROM LIVING SOURCES, LIQUID, N.O.S.
L4BH	TU15 TE15 TE19	AT	2			CV13 CV28	S9 S19	60	3172	TOXINS, EXTRACTED FROM LIVING SOURCES, LIQUID, N.O.S.

UN No.	Name and description	Class	Classification code	Packing group	Labels	Special provisions	Limited quantities	Packaging			Portable tanks and bulk containers	
								Packing instructions	Special packing provisions	Mixed packing provisions	Instructions	Special provisions
	3.1.2	2.2	2.2	2.1.1.3	5.2.2	3.3	3.4.6	4.1.4	4.1.4	4.1.10	4.2.5.2 7.3.2	4.2.5.3
(1)	(2)	(3a)	(3b)	(4)	(5)	(6)	(7)	(8)	(9a)	(9b)	(10)	(11)
3172	TOXINS, EXTRACTED FROM LIVING SOURCES, LIQUID, N.O.S.	6.1	T1	III	6.1	210 274	LQ19	P001 IBC03 LP01 R001		MP15		
3174	TITANIUM DISULPHIDE	4.2	S4	III	4.2		LQ0	P002 IBC08 LP02 R001	B3	MP14	T1	TP33
3175	SOLIDS or mixtures of solids (such as preparations and wastes) CONTAINING FLAMMABLE LIQUID, N.O.S. having a flash-point up to 61°C	4.1	F1	II	4.1	216 274	LQ8	P002 IBC06 R001	PP9	MP11	T3 BK1 BK2	TP33
3176	FLAMMABLE SOLID, ORGANIC, MOLTEN, N.O.S.	4.1	F2	II	4.1	274	LQ0				T3	TP3 TP26
3176	FLAMMABLE SOLID, ORGANIC, MOLTEN, N.O.S.	4.1	F2	III	4.1	274	LQ0				T1	TP3 TP26
3178	FLAMMABLE SOLID, INORGANIC, N.O.S.	4.1	F3	II	4.1	274	LQ8	P002 IBC08	B4	MP11	T3	TP33
3178	FLAMMABLE SOLID, INORGANIC, N.O.S.	4.1	F3	III	4.1	274	LQ9	P002 IBC08 LP02 R001	B3	MP11	T1	TP33
3179	FLAMMABLE SOLID, TOXIC, INORGANIC, N.O.S.	4.1	FT2	II	4.1 +6.1	274	LQ0	P002 IBC06		MP10	T3	TP33
3179	FLAMMABLE SOLID, TOXIC, INORGANIC, N.O.S.	4.1	FT2	III	4.1 +6.1	274	LQ0	P002 IBC06 R001		MP10	T1	TP33
3180	FLAMMABLE SOLID, CORROSIVE, INORGANIC, N.O.S.	4.1	FC2	II	4.1 +8	274	LQ0	P002 IBC06		MP10	T3	TP33
3180	FLAMMABLE SOLID, CORROSIVE, INORGANIC, N.O.S.	4.1	FC2	III	4.1 +8	274	LQ0	P002 IBC06 R001		MP10	T1	TP33
3181	METAL SALTS OF ORGANIC COMPOUNDS, FLAMMABLE, N.O.S.	4.1	F3	II	4.1	274	LQ8	P002 IBC08	B4	MP11	T3	TP33
3181	METAL SALTS OF ORGANIC COMPOUNDS, FLAMMABLE, N.O.S.	4.1	F3	III	4.1	274	LQ9	P002 IBC08 LP02 R001	B3	MP11	T1	TP33
3182	METAL HYDRIDES, FLAMMABLE, N.O.S.	4.1	F3	II	4.1	274 554	LQ8	P410 IBC04	PP40	MP11	T3	TP33
3182	METAL HYDRIDES, FLAMMABLE, N.O.S.	4.1	F3	III	4.1	274 554	LQ9	P002 IBC04 R001		MP11	T1	TP33
3183	SELF-HEATING LIQUID, ORGANIC, N.O.S.	4.2	S1	II	4.2	274	LQ0	P001 IBC02		MP15		
3183	SELF-HEATING LIQUID, ORGANIC, N.O.S.	4.2	S1	III	4.2	274	LQ0	P001 IBC02 R001		MP15		
3184	SELF-HEATING LIQUID, TOXIC, ORGANIC, N.O.S.	4.2	ST1	II	4.2 +6.1	274	LQ0	P402 IBC02		MP15		
3184	SELF-HEATING LIQUID, TOXIC, ORGANIC, N.O.S.	4.2	ST1	III	4.2 +6.1	274	LQ0	P001 IBC02 R001		MP15		
3185	SELF-HEATING LIQUID, CORROSIVE, ORGANIC, N.O.S.	4.2	SC1	II	4.2 +8	274	LQ0	P402 IBC02		MP15		
3185	SELF-HEATING LIQUID, CORROSIVE, ORGANIC, N.O.S.	4.2	SC1	III	4.2 +8	274	LQ0	P001 IBC02 R001		MP15		

ADR tank		Vehicle for tank carriage	Transport category	Special provisions for carriage				Hazard identifi-cation No.	UN No.	Name and description
Tank code	Special provisions			Packages	Bulk	Loading, unloading and handling	Operation			
4.3	4.3.5, 6.8.4	9.1.1.2	1.1.3.6	7.2.4	7.3.3	7.5.11	8.5	5.3.2.3		3.1.2
(12)	(13)	(14)	(15)	(16)	(17)	(18)	(19)	(20)	(1)	(2)
L4BH	TU15 TE15 TE19	AT	2			CV13 CV28	S9	60	3172	TOXINS, EXTRACTED FROM LIVING SOURCES, LIQUID, N.O.S.
SGAN		AT	3	V1				40	3174	TITANIUM DISULPHIDE
			2	V11 V12	VV3			40	3175	SOLIDS or mixtures of solids (such as preparations and wastes) CONTAINING FLAMMABLE LIQUID, N.O.S. having a flash-point up to 61°C
LGBV	TU27 TE4 TE6	AT	2					44	3176	FLAMMABLE SOLID, ORGANIC, MOLTEN, N.O.S.
LGBV	TU27 TE4 TE6	AT	3					44	3176	FLAMMABLE SOLID, ORGANIC, MOLTEN, N.O.S.
SGAN		AT	2	V11				40	3178	FLAMMABLE SOLID, INORGANIC, N.O.S.
SGAV		AT	3		VV1			40	3178	FLAMMABLE SOLID, INORGANIC, N.O.S.
SGAN		AT	2	V11 V12		CV28		46	3179	FLAMMABLE SOLID, TOXIC, INORGANIC, N.O.S.
SGAN		AT	3	V12		CV28		46	3179	FLAMMABLE SOLID, TOXIC, INORGANIC, N.O.S.
SGAN		AT	2	V11 V12				48	3180	FLAMMABLE SOLID, CORROSIVE, INORGANIC, N.O.S.
SGAN		AT	3	V12				48	3180	FLAMMABLE SOLID, CORROSIVE, INORGANIC, N.O.S.
SGAN		AT	2	V11				40	3181	METAL SALTS OF ORGANIC COMPOUNDS, FLAMMABLE, N.O.S.
SGAV		AT	3		VV1			40	3181	METAL SALTS OF ORGANIC COMPOUNDS, FLAMMABLE, N.O.S.
SGAN		AT	2					40	3182	METAL HYDRIDES, FLAMMABLE, N.O.S.
SGAV		AT	3		VV1			40	3182	METAL HYDRIDES, FLAMMABLE, N.O.S.
L4DH	TU14 TE21	AT	2	V1				30	3183	SELF-HEATING LIQUID, ORGANIC, N.O.S.
L4DH	TU14 TE21	AT	3	V1				30	3183	SELF-HEATING LIQUID, ORGANIC, N.O.S.
L4DH	TU14 TE21	AT	2	V1		CV28		36	3184	SELF-HEATING LIQUID, TOXIC, ORGANIC, N.O.S.
L4DH	TU14 TE21	AT	3	V1		CV28		36	3184	SELF-HEATING LIQUID, TOXIC, ORGANIC, N.O.S.
L4DH	TU14 TE21	AT	2	V1				38	3185	SELF-HEATING LIQUID, CORROSIVE, ORGANIC, N.O.S.
L4DH	TU14 TE21	AT	3	V1				38	3185	SELF-HEATING LIQUID, CORROSIVE, ORGANIC, N.O.S.

UN No.	Name and description	Class	Classification code	Packing group	Labels	Special provisions	Limited quantities	Packaging			Portable tanks and bulk containers	
								Packing instructions	Special packing provisions	Mixed packing provisions	Instructions	Special provisions
	3.1.2	2.2	2.2	2.1.1.3	5.2.2	3.3	3.4.6	4.1.4	4.1.4	4.1.10	4.2.5.2 7.3.2	4.2.5.3
(1)	(2)	(3a)	(3b)	(4)	(5)	(6)	(7)	(8)	(9a)	(9b)	(10)	(11)
3186	SELF-HEATING LIQUID, INORGANIC, N.O.S.	4.2	S3	II	4.2	274	LQ0	P001 IBC02		MP15		
3186	SELF-HEATING LIQUID, INORGANIC, N.O.S.	4.2	S3	III	4.2	274	LQ0	P001 IBC02 R001		MP15		
3187	SELF-HEATING LIQUID, TOXIC, INORGANIC, N.O.S.	4.2	ST3	II	4.2 +6.1	274	LQ0	P402 IBC02		MP15		
3187	SELF-HEATING LIQUID, TOXIC, INORGANIC, N.O.S.	4.2	ST3	III	4.2 +6.1	274	LQ0	P001 IBC02 R001		MP15		
3188	SELF-HEATING LIQUID, CORROSIVE, INORGANIC, N.O.S.	4.2	SC3	II	4.2 +8	274	LQ0	P402 IBC02		MP15		
3188	SELF-HEATING LIQUID, CORROSIVE, INORGANIC, N.O.S.	4.2	SC3	III	4.2 +8	274	LQ0	P001 IBC02 R001		MP15		
3189	METAL POWDER, SELF-HEATING, N.O.S.	4.2	S4	II	4.2	274 555	LQ0	P410 IBC06		MP14	T3	TP33
3189	METAL POWDER, SELF-HEATING, N.O.S.	4.2	S4	III	4.2	274 555	LQ0	P002 IBC08 LP02 R001	B3	MP14	T1	TP33
3190	SELF-HEATING SOLID, INORGANIC, N.O.S.	4.2	S4	II	4.2	274	LQ0	P410 IBC06		MP14	T3	TP33
3190	SELF-HEATING SOLID, INORGANIC, N.O.S.	4.2	S4	III	4.2	274	LQ0	P002 IBC08 LP02 R001	B3	MP14	T1	TP33
3191	SELF-HEATING SOLID, TOXIC, INORGANIC, N.O.S.	4.2	ST4	II	4.2 +6.1	274	LQ0	P410 IBC05		MP14	T3	TP33
3191	SELF-HEATING SOLID, TOXIC, INORGANIC, N.O.S.	4.2	ST4	III	4.2 +6.1	274	LQ0	P002 IBC08 R001	B3	MP14	T1	TP33
3192	SELF-HEATING SOLID, CORROSIVE, INORGANIC, N.O.S.	4.2	SC4	II	4.2 +8	274	LQ0	P410 IBC05		MP14	T3	TP33
3192	SELF-HEATING SOLID, CORROSIVE, INORGANIC, N.O.S.	4.2	SC4	III	4.2 +8	274	LQ0	P002 IBC08 R001	B3	MP14	T1	TP33
3194	PYROPHORIC LIQUID, INORGANIC, N.O.S.	4.2	S3	I	4.2	274	LQ0	P400 PR1		MP2		
3200	PYROPHORIC SOLID, INORGANIC, N.O.S.	4.2	S4	I	4.2	274	LQ0	P404		MP13	T21	TP7 TP9 TP33
3205	ALKALINE EARTH METAL ALCOHOLATES, N.O.S.	4.2	S4	II	4.2	183 274	LQ0	P410 IBC06		MP14	T3	TP33
3205	ALKALINE EARTH METAL ALCOHOLATES, N.O.S.	4.2	S4	III	4.2	183 274	LQ0	P002 IBC08 LP02 R001	B3	MP14	T1	TP33
3206	ALKALI METAL ALCOHOLATES, SELF-HEATING, CORROSIVE, N.O.S.	4.2	SC4	II	4.2 +8	182 274	LQ0	P410 IBC05		MP14	T3	TP33
3206	ALKALI METAL ALCOHOLATES, SELF-HEATING, CORROSIVE, N.O.S.	4.2	SC4	III	4.2 +8	183 274	LQ0	P002 IBC08 R001	B3	MP14	T1	TP33
3208	METALLIC SUBSTANCE, WATER-REACTIVE, N.O.S.	4.3	W2	I	4.3	274 557	LQ0	P403 IBC99		MP2		
3208	METALLIC SUBSTANCE, WATER-REACTIVE, N.O.S.	4.3	W2	II	4.3	274 557	LQ11	P410 IBC07		MP14	T3	TP33

ADR tank		Vehicle for tank carriage	Transport category	Special provisions for carriage				Hazard identification No.	UN No.	Name and description
Tank code	Special provisions			Packages	Bulk	Loading, unloading and handling	Operation			
4.3	4.3.5, 6.8.4	9.1.1.2	1.1.3.6	7.2.4	7.3.3	7.5.11	8.5	5.3.2.3		3.1.2
(12)	(13)	(14)	(15)	(16)	(17)	(18)	(19)	(20)	(1)	(2)
L4DH	TU14 TE21	AT	2	V1				30	3186	SELF-HEATING LIQUID, INORGANIC, N.O.S.
L4DH	TU14 TE21	AT	3	V1				30	3186	SELF-HEATING LIQUID, INORGANIC, N.O.S.
L4DH	TU14 TE21	AT	2	V1		CV28		36	3187	SELF-HEATING LIQUID, TOXIC, INORGANIC, N.O.S.
L4DH	TU14 TE21	AT	3	V1		CV28		36	3187	SELF-HEATING LIQUID, TOXIC, INORGANIC, N.O.S.
L4DH	TU14 TE21	AT	2	V1				38	3188	SELF-HEATING LIQUID, CORROSIVE, INORGANIC, N.O.S.
L4DH	TU14 TE21	AT	3	V1				38	3188	SELF-HEATING LIQUID, CORROSIVE, INORGANIC, N.O.S.
SGAN		AT	2	V1 V12				40	3189	METAL POWDER, SELF-HEATING, N.O.S.
SGAN		AT	3	V1	VV4			40	3189	METAL POWDER, SELF-HEATING, N.O.S.
SGAN		AT	2	V1 V12				40	3190	SELF-HEATING SOLID, INORGANIC, N.O.S.
SGAN		AT	3	V1	VV4			40	3190	SELF-HEATING SOLID, INORGANIC, N.O.S.
SGAN		AT	2	V1		CV28		46	3191	SELF-HEATING SOLID, TOXIC, INORGANIC, N.O.S.
SGAN		AT	3	V1		CV28		46	3191	SELF-HEATING SOLID, TOXIC, INORGANIC, N.O.S.
SGAN		AT	2	V1				48	3192	SELF-HEATING SOLID, CORROSIVE, INORGANIC, N.O.S.
SGAN		AT	3	V1				48	3192	SELF-HEATING SOLID, CORROSIVE, INORGANIC, N.O.S.
L21DH	TU14 TC1 TE21 TM1	AT	0	V1			S20	333	3194	PYROPHORIC LIQUID, INORGANIC, N.O.S.
		AT	0	V1			S20	43	3200	PYROPHORIC SOLID, INORGANIC, N.O.S.
SGAN		AT	2	V1 V12				40	3205	ALKALINE EARTH METAL ALCOHOLATES, N.O.S.
SGAN		AT	3	V1				40	3205	ALKALINE EARTH METAL ALCOHOLATES, N.O.S.
SGAN		AT	2	V1				48	3206	ALKALI METAL ALCOHOLATES, SELF-HEATING, CORROSIVE, N.O.S.
SGAN		AT	3	V1				48	3206	ALKALI METAL ALCOHOLATES, SELF-HEATING, CORROSIVE, N.O.S.
			1	V1		CV23	S20		3208	METALLIC SUBSTANCE, WATER-REACTIVE, N.O.S.
SGAN		AT	2	V1 V12		CV23		423	3208	METALLIC SUBSTANCE, WATER-REACTIVE, N.O.S.

UN No.	Name and description	Class	Classification code	Packing group	Labels	Special provisions	Limited quantities	Packaging			Portable tanks and bulk containers	
								Packing instructions	Special packing provisions	Mixed packing provisions	Instructions	Special provisions
	3.1.2	2.2	2.2	2.1.1.3	5.2.2	3.3	3.4.6	4.1.4	4.1.4	4.1.10	4.2.5.2 7.3.2	4.2.5.3
(1)	(2)	(3a)	(3b)	(4)	(5)	(6)	(7)	(8)	(9a)	(9b)	(10)	(11)
3208	METALLIC SUBSTANCE, WATER-REACTIVE, N.O.S.	4.3	W2	III	4.3	274 557	LQ12	P410 IBC08 R001	B4	MP14	T1	TP33
3209	METALLIC SUBSTANCE, WATER-REACTIVE, SELF-HEATING, N.O.S.	4.3	WS	I	4.3 +4.2	274 558	LQ0	P403		MP2		
3209	METALLIC SUBSTANCE, WATER-REACTIVE, SELF-HEATING, N.O.S.	4.3	WS	II	4.3 +4.2	274 558	LQ11	P410 IBC05		MP14	T3	TP33
3209	METALLIC SUBSTANCE, WATER-REACTIVE, SELF-HEATING, N.O.S.	4.3	WS	III	4.3 +4.2	274 558	LQ12	P410 IBC08 R001	B4	MP14	T1	TP33
3210	CHLORATES, INORGANIC, AQUEOUS SOLUTION, N.O.S.	5.1	O1	II	5.1	274 605	LQ10	P504 IBC02		MP2	T4	TP1
3210	CHLORATES, INORGANIC, AQUEOUS SOLUTION, N.O.S.	5.1	O1	III	5.1	274 605	LQ13	P504 IBC02 R001		MP2	T4	TP1
3211	PERCHLORATES, INORGANIC, AQUEOUS SOLUTION, N.O.S.	5.1	O1	II	5.1	274	LQ10	P504 IBC02		MP2	T4	TP1
3211	PERCHLORATES, INORGANIC, AQUEOUS SOLUTION, N.O.S.	5.1	O1	III	5.1	274	LQ13	P504 IBC02 R001		MP2	T4	TP1
3212	HYPOCHLORITES, INORGANIC, N.O.S.	5.1	O2	II	5.1	274 559	LQ11	P002 IBC08	B4	MP10	T3	TP33
3213	BROMATES, INORGANIC, AQUEOUS SOLUTION, N.O.S.	5.1	O1	II	5.1	274 604	LQ10	P504 IBC02		MP2	T4	TP1
3213	BROMATES, INORGANIC, AQUEOUS SOLUTION, N.O.S.	5.1	O1	III	5.1	274 604	LQ13	P504 IBC02 R001		MP15	T4	TP1
3214	PERMANGANATES, INORGANIC, AQUEOUS SOLUTION, N.O.S.	5.1	O1	II	5.1	274 608	LQ10	P504 IBC02		MP2	T4	TP1
3215	PERSULPHATES, INORGANIC, N.O.S.	5.1	O2	III	5.1	274	LQ12	P002 IBC08 LP02 R001	B3	MP10	T1	TP33
3216	PERSULPHATES, INORGANIC, AQUEOUS SOLUTION, N.O.S.	5.1	O1	III	5.1	274	LQ13	P504 IBC02 R001		MP15	T4	TP1 TP29
3218	NITRATES, INORGANIC, AQUEOUS SOLUTION, N.O.S.	5.1	O1	II	5.1	270 274 511	LQ10	P504 IBC02		MP15	T4	TP1
3218	NITRATES, INORGANIC, AQUEOUS SOLUTION, N.O.S.	5.1	O1	III	5.1	270 274 511	LQ13	P504 IBC02 R001		MP15	T4	TP1
3219	NITRITES, INORGANIC, AQUEOUS SOLUTION, N.O.S.	5.1	O1	II	5.1	103 274	LQ10	P504 IBC01		MP15	T4	TP1
3219	NITRITES, INORGANIC, AQUEOUS SOLUTION, N.O.S.	5.1	O1	III	5.1	103 274	LQ13	P504 IBC02 R001		MP15	T4	TP1
3220	PENTAFLUOROETHANE (REFRIGERANT GAS R 125)	2	2A		2.2		LQ1	P200		MP9	(M) T50	
3221	SELF-REACTIVE LIQUID TYPE B	4.1	SR1		4.1 +1	181 194 274	LQ14	P520	PP21	MP2		
3222	SELF-REACTIVE SOLID TYPE B	4.1	SR1		4.1 +1	181 194 274	LQ15	P520	PP21	MP2		
3223	SELF-REACTIVE LIQUID TYPE C	4.1	SR1		4.1	194 274	LQ14	P520	PP21	MP2		

ADR tank		Vehicle for tank carriage	Transport category	Special provisions for carriage				Hazard identifi-cation No.	UN No.	Name and description
Tank code	Special provisions			Packages	Bulk	Loading, unloading and handling	Operation			
4.3	4.3.5, 6.8.4	9.1.1.2	1.1.3.6	7.2.4	7.3.3	7.5.11	8.5	5.3.2.3		3.1.2
(12)	(13)	(14)	(15)	(16)	(17)	(18)	(19)	(20)	(1)	(2)
SGAN		AT	3	V1	VV5	CV23		423	3208	METALLIC SUBSTANCE, WATER-REACTIVE, N.O.S.
			1	V1		CV23	S20		3209	METALLIC SUBSTANCE, WATER-REACTIVE, SELF-HEATING, N.O.S.
SGAN		AT	2	V1		CV23		423	3209	METALLIC SUBSTANCE, WATER-REACTIVE, SELF-HEATING, N.O.S.
SGAN		AT	3	V1	VV5	CV23		423	3209	METALLIC SUBSTANCE, WATER-REACTIVE, SELF-HEATING, N.O.S.
L4BN	TU3	AT	2			CV24		50	3210	CHLORATES, INORGANIC, AQUEOUS SOLUTION, N.O.S.
LGBV	TU3	AT	3			CV24		50	3210	CHLORATES, INORGANIC, AQUEOUS SOLUTION, N.O.S.
L4BN	TU3	AT	2	V6		CV24		50	3211	PERCHLORATES, INORGANIC, AQUEOUS SOLUTION, N.O.S.
LGBV	TU3	AT	3	V6		CV24		50	3211	PERCHLORATES, INORGANIC, AQUEOUS SOLUTION, N.O.S.
SGAN	TU3	AT	2	V11		CV24		50	3212	HYPOCHLORITES, INORGANIC, N.O.S.
L4BN	TU3	AT	2	V6		CV24		50	3213	BROMATES, INORGANIC, AQUEOUS SOLUTION, N.O.S.
LGBV	TU3	AT	3			CV24		50	3213	BROMATES, INORGANIC, AQUEOUS SOLUTION, N.O.S.
L4BN	TU3	AT	2			CV24		50	3214	PERMANGANATES, INORGANIC, AQUEOUS SOLUTION, N.O.S.
SGAV	TU3	AT	3		VV8	CV24		50	3215	PERSULPHATES, INORGANIC, N.O.S.
LGBV	TU3	AT	3			CV24		50	3216	PERSULPHATES, INORGANIC, AQUEOUS SOLUTION, N.O.S.
L4BN	TU3	AT	2			CV24		50	3218	NITRATES, INORGANIC, AQUEOUS SOLUTION, N.O.S.
LGBV	TU3	AT	3			CV24		50	3218	NITRATES, INORGANIC, AQUEOUS SOLUTION, N.O.S.
L4BN	TU3	AT	2			CV24		50	3219	NITRITES, INORGANIC, AQUEOUS SOLUTION, N.O.S.
LGBV	TU3	AT	3			CV24		50	3219	NITRITES, INORGANIC, AQUEOUS SOLUTION, N.O.S.
PxBN(M)		AT	3			CV9 CV10 CV36		20	3220	PENTAFLUOROETHANE (REFRIGERANT GAS R 125)
			1	V1		CV15 CV20 CV22	S9 S17		3221	SELF-REACTIVE LIQUID TYPE B
			1	V1		CV15 CV20 CV22	S9 S17		3222	SELF-REACTIVE SOLID TYPE B
			1	V1		CV15 CV20 CV22	S8 S18		3223	SELF-REACTIVE LIQUID TYPE C

UN No.	Name and description	Class	Classification code	Packing group	Labels	Special provisions	Limited quantities	Packaging			Portable tanks and bulk containers	
								Packing instructions	Special packing provisions	Mixed packing provisions	Instructions	Special provisions
	3.1.2	2.2	2.2	2.1.1.3	5.2.2	3.3	3.4.6	4.1.4	4.1.4	4.1.10	4.2.5.2 7.3.2	4.2.5.3
(1)	(2)	(3a)	(3b)	(4)	(5)	(6)	(7)	(8)	(9a)	(9b)	(10)	(11)
3224	SELF-REACTIVE SOLID TYPE C	4.1	SR1		4.1	194 274	LQ15	P520	PP21	MP2		
3225	SELF-REACTIVE LIQUID TYPE D	4.1	SR1		4.1	194 274	LQ16	P520		MP2		
3226	SELF-REACTIVE SOLID TYPE D	4.1	SR1		4.1	194 274	LQ11	P520		MP2		
3227	SELF-REACTIVE LIQUID TYPE E	4.1	SR1		4.1	194 274	LQ16	P520		MP2		
3228	SELF-REACTIVE SOLID TYPE E	4.1	SR1		4.1	194 274	LQ11	P520		MP2		
3229	SELF-REACTIVE LIQUID TYPE F	4.1	SR1		4.1	194 274	LQ16	P520 IBC99		MP2	T23	
3230	SELF-REACTIVE SOLID TYPE F	4.1	SR1		4.1	194 274	LQ0	P520 IBC99		MP2	T23	
3231	SELF-REACTIVE LIQUID TYPE B, TEMPERATURE CONTROLLED	4.1	SR2		4.1 +1	181 194 274	LQ0	P520	PP21	MP2		
3232	SELF-REACTIVE SOLID TYPE B, TEMPERATURE CONTROLLED	4.1	SR2		4.1 +1	181 194 274	LQ0	P520	PP21	MP2		
3233	SELF-REACTIVE LIQUID TYPE C, TEMPERATURE CONTROLLED	4.1	SR2		4.1	194 274	LQ0	P520	PP21	MP2		
3234	SELF-REACTIVE SOLID TYPE C, TEMPERATURE CONTROLLED	4.1	SR2		4.1	194 274	LQ0	P520	PP21	MP2		
3235	SELF-REACTIVE LIQUID TYPE D, TEMPERATURE CONTROLLED	4.1	SR2		4.1	194 274	LQ0	P520		MP2		
3236	SELF-REACTIVE SOLID TYPE D, TEMPERATURE CONTROLLED	4.1	SR2		4.1	194 274	LQ0	P520		MP2		
3237	SELF-REACTIVE LIQUID TYPE E, TEMPERATURE CONTROLLED	4.1	SR2		4.1	194 274	LQ0	P520		MP2		
3238	SELF-REACTIVE SOLID TYPE E, TEMPERATURE CONTROLLED	4.1	SR2		4.1	194 274	LQ0	P520		MP2		
3239	SELF-REACTIVE LIQUID TYPE F, TEMPERATURE CONTROLLED	4.1	SR2		4.1	194 274	LQ0	P520		MP2	T23	
3240	SELF-REACTIVE SOLID TYPE F, TEMPERATURE CONTROLLED	4.1	SR2		4.1	194 274	LQ0	P520		MP2	T23	
3241	2-BROMO-2-NITROPROPANE-1,3-DIOL	4.1	SR1	III	4.1	638	LQ0	P520 IBC08	PP22 B3	MP2		
3242	AZODICARBONAMIDE	4.1	SR1	II	4.1	215 638	LQ0	P409		MP2	T3	TP33
3243	SOLIDS CONTAINING TOXIC LIQUID, N.O.S.	6.1	T9	II	6.1	217 274	LQ18	P002 IBC02	PP9	MP15	T3 BK1 BK2	TP33
3244	SOLIDS CONTAINING CORROSIVE LIQUID, N.O.S.	8	C10	II	8	218 274	LQ23	P002 IBC05	PP9	MP10	T3 BK1 BK2	TP33
3245	GENETICALLY MODIFIED MICRO-ORGANISMS	9	M8		9	219 634 637	LQ0	P904 IBC08		MP6		

ADR tank		Vehicle for tank carriage	Transport category	Special provisions for carriage				Hazard identifi-cation No.	UN No.	Name and description
Tank code	Special provisions			Packages	Bulk	Loading, unloading and handling	Operation			
4.3	4.3.5, 6.8.4	9.1.1.2	1.1.3.6	7.2.4	7.3.3	7.5.11	8.5	5.3.2.3		3.1.2
(12)	(13)	(14)	(15)	(16)	(17)	(18)	(19)	(20)	(1)	(2)
			1	V1		CV15 CV20 CV22	S8 S18		3224	SELF-REACTIVE SOLID TYPE C
			2	V1		CV15 CV22	S19		3225	SELF-REACTIVE LIQUID TYPE D
			2	V1		CV15 CV22	S19		3226	SELF-REACTIVE SOLID TYPE D
			2	V1		CV15 CV22			3227	SELF-REACTIVE LIQUID TYPE E
			2	V1		CV15 CV22			3228	SELF-REACTIVE SOLID TYPE E
		AT	2	V1		CV15 CV22		40	3229	SELF-REACTIVE LIQUID TYPE F
		AT	2	V1		CV15 CV22		40	3230	SELF-REACTIVE SOLID TYPE F
			1	V8		CV15 CV20 CV21 CV22	S4 S9 S16		3231	SELF-REACTIVE LIQUID TYPE B, TEMPERATURE CONTROLLED
			1	V8		CV15 CV20 CV21 CV22	S4 S9 S16		3232	SELF-REACTIVE SOLID TYPE B, TEMPERATURE CONTROLLED
			1	V8		CV15 CV20 CV21 CV22	S4 S8 S17		3233	SELF-REACTIVE LIQUID TYPE C, TEMPERATURE CONTROLLED
			1	V8		CV15 CV20 CV21 CV22	S4 S8 S17		3234	SELF-REACTIVE SOLID TYPE C, TEMPERATURE CONTROLLED
			1	V8		CV15 CV21 CV22	S4 S18		3235	SELF-REACTIVE LIQUID TYPE D, TEMPERATURE CONTROLLED
			1	V8		CV15 CV21 CV22	S4 S18		3236	SELF-REACTIVE SOLID TYPE D, TEMPERATURE CONTROLLED
			1	V8		CV15 CV21 CV22	S4 S19		3237	SELF-REACTIVE LIQUID TYPE E, TEMPERATURE CONTROLLED
			1	V8		CV15 CV21 CV22	S4 S19		3238	SELF-REACTIVE SOLID TYPE E, TEMPERATURE CONTROLLED
		AT	1	V8		CV15 CV21 CV22	S4	40	3239	SELF-REACTIVE LIQUID TYPE F, TEMPERATURE CONTROLLED
		AT	1	V8		CV15 CV21 CV22	S4	40	3240	SELF-REACTIVE SOLID TYPE F, TEMPERATURE CONTROLLED
			3			CV14	S14		3241	2-BROMO-2-NITROPROPANE-1,3-DIOL
		AT	2			CV14	S14	40	3242	AZODICARBONAMIDE
SGAH	TU15 TE15 TE19	AT	2		VV10	CV13 CV28	S9 S19	60	3243	SOLIDS CONTAINING TOXIC LIQUID, N.O.S.
SGAV		AT	2		VV10			80	3244	SOLIDS CONTAINING CORROSIVE LIQUID, N.O.S.
			2			CV1 CV13 CV26 CV27 CV28	S17		3245	GENETICALLY MODIFIED MICRO-ORGANISMS

UN No.	Name and description	Class	Classification code	Packing group	Labels	Special provisions	Limited quantities	Packaging			Portable tanks and bulk containers	
								Packing instructions	Special packing provisions	Mixed packing provisions	Instructions	Special provisions
	3.1.2	2.2	2.2	2.1.1.3	5.2.2	3.3	3.4.6	4.1.4	4.1.4	4.1.10	4.2.5.2 7.3.2	4.2.5.3
(1)	(2)	(3a)	(3b)	(4)	(5)	(6)	(7)	(8)	(9a)	(9b)	(10)	(11)
3246	METHANESULPHONYL CHLORIDE	6.1	TC1	I	6.1 +8		LQ0	P001		MP8 MP17	T14	TP2 TP12
3247	SODIUM PEROXOBORATE, ANHYDROUS	5.1	O2	II	5.1		LQ11	P002 IBC08	B4	MP2	T3	TP33
3248	MEDICINE, LIQUID, FLAMMABLE, TOXIC, N.O.S.	3	FT1	II	3 +6.1	220 221 274 601	LQ0	P001	PP6	MP19		
3248	MEDICINE, LIQUID, FLAMMABLE, TOXIC, N.O.S.	3	FT1	III	3 +6.1	220 221 274 601	LQ7	P001 R001	PP6	MP19		
3249	MEDICINE, SOLID, TOXIC, N.O.S.	6.1	T2	II	6.1	221 274 601	LQ18	P002	PP6	MP10	T3	TP33
3249	MEDICINE, SOLID, TOXIC, N.O.S.	6.1	T2	III	6.1	221 274 601	LQ9	P002 LP02 R001	PP6	MP10	T1	TP33
3250	CHLOROACETIC ACID, MOLTEN	6.1	TC1	II	6.1 +8		LQ0				T7	TP3 TP28
3251	ISOSORBIDE-5-MONONITRATE	4.1	SR1	III	4.1	226 638	LQ0	P409		MP2		
3252	DIFLUOROMETHANE (REFRIGERANT GAS R 32)	2	2F		2.1		LQ0	P200		MP9	(M) T50	
3253	DISODIUM TRIOXOSILICATE	8	C6	III	8		LQ24	P002 IBC08 LP02 R001	B3	MP10	T1	TP33
3254	TRIBUTYLPHOSPHANE	4.2	S1	I	4.2		LQ0	P400 PR1		MP2	T21	TP7 TP33
3255	tert-BUTYL HYPOCHLORITE	4.2	SC1	CARRIAGE PROHIBITED								
3256	ELEVATED TEMPERATURE LIQUID, FLAMMABLE, N.O.S. with flash-point above 61 °C, at or above its flash-point	3	F2	III	3	274 560	LQ0	P099 IBC99		MP2	T3	TP3 TP29
3257	ELEVATED TEMPERATURE LIQUID, N.O.S., at or above 100 °C and below its flash-point (including molten metals, molten salts, etc.)	9	M9	III	9	274 580 643	LQ0	P099 IBC99			T3	TP3 TP29
3258	ELEVATED TEMPERATURE SOLID, N.O.S., at or above 240 °C	9	M10	III	9	274 580 643	LQ0	P099 IBC99				
3259	AMINES, SOLID, CORROSIVE, N.O.S. or POLYAMINES, SOLID, CORROSIVE, N.O.S.	8	C8	I	8	274	LQ0	P002 IBC07		MP18	T6	TP9 TP33
3259	AMINES, SOLID, CORROSIVE, N.O.S. or POLYAMINES, SOLID, CORROSIVE, N.O.S.	8	C8	II	8	274	LQ23	P002 IBC08	B4	MP10	T3	TP33
3259	AMINES, SOLID, CORROSIVE, N.O.S. or POLYAMINES, SOLID, CORROSIVE, N.O.S.	8	C8	III	8	274	LQ24	P002 IBC08 LP02 R001	B3	MP10	T1	TP33
3260	CORROSIVE SOLID, ACIDIC, INORGANIC, N.O.S.	8	C2	I	8	274	LQ0	P002 IBC07		MP18	T6	TP9 TP33

ADR tank		Vehicle for tank carriage	Transport category	Special provisions for carriage				Hazard identification No.	UN No.	Name and description
Tank code	Special provisions			Packages	Bulk	Loading, unloading and handling	Operation			
4.3	4.3.5, 6.8.4	9.1.1.2	1.1.3.6	7.2.4	7.3.3	7.5.11	8.5	5.3.2.3		3.1.2
(12)	(13)	(14)	(15)	(16)	(17)	(18)	(19)	(20)	(1)	(2)
L10CH	TU14 TU15 TE19 TE21	AT	1			CV1 CV13 CV28	S9 S17	668	3246	METHANESULPHONYL CHLORIDE
SGAN	TU3	AT	2			CV24		50	3247	SODIUM PEROXOBORATE, ANHYDROUS
L4BH	TU15 TE15	FL	2			CV13 CV28	S2 S19	336	3248	MEDICINE, LIQUID, FLAMMABLE, TOXIC, N.O.S.
L4BH	TU15 TE15	FL	3			CV13 CV28	S2	36	3248	MEDICINE, LIQUID, FLAMMABLE, TOXIC, N.O.S.
SGAH L4BH	TU15 TE15 TE19	AT	2			CV13 CV28	S9 S19	60	3249	MEDICINE, SOLID, TOXIC, N.O.S.
SGAH L4BH	TU15 TE15 TE19	AT	2		VV9b	CV13 CV28	S9	60	3249	MEDICINE, SOLID, TOXIC, N.O.S.
L4BH	TU15 TC4 TE15 TE19	AT	0			CV13	S9 S19	68	3250	CHLOROACETIC ACID, MOLTEN
			3			CV14	S14		3251	ISOSORBIDE-5-MONONITRATE
PxBN(M)		FL	2			CV9 CV10 CV36	S2 S20	23	3252	DIFLUOROMETHANE (REFRIGERANT GAS R 32)
SGAV		AT	3		VV9b			80	3253	DISODIUM TRIOXOSILICATE
		AT	0	V1			S20	333	3254	TRIBUTYLPHOSPHANE
CARRIAGE PROHIBITED									3255	tert-BUTYL HYPOCHLORITE
LGAV	TU35 TE24	FL	3				S2	30	3256	ELEVATED TEMPERATURE LIQUID, FLAMMABLE, N.O.S. with flash-point above 61 °C, at or above its flash-point
LGAV	TU35 TC7 TE6 TE14 TE18 TE24	AT	3		VV12			99	3257	ELEVATED TEMPERATURE LIQUID, N.O.S., at or above 100 °C and below its flash-point (including molten metals, molten salts, etc.)
			3		VV13			99	3258	ELEVATED TEMPERATURE SOLID, N.O.S., at or above 240 °C
S10AN L10BH		AT	1	V10 V12			S20	88	3259	AMINES, SOLID, CORROSIVE, N.O.S. or POLYAMINES, SOLID, CORROSIVE, N.O.S.
SGAN L4BN		AT	2	V11				80	3259	AMINES, SOLID, CORROSIVE, N.O.S. or POLYAMINES, SOLID, CORROSIVE, N.O.S.
SGAV L4BN		AT	3		VV9b			80	3259	AMINES, SOLID, CORROSIVE, N.O.S. or POLYAMINES, SOLID, CORROSIVE, N.O.S.
S10AN		AT	1	V10 V12			S20	88	3260	CORROSIVE SOLID, ACIDIC, INORGANIC, N.O.S.

UN No.	Name and description	Class	Classifi-cation code	Packing group	Labels	Special provi-sions	Limited quantities	Packaging			Portable tanks and bulk containers	
								Packing instruc-tions	Special packing provisions	Mixed packing provisions	Instruc-tions	Special provisions
	3.1.2	2.2	2.2	2.1.1.3	5.2.2	3.3	3.4.6	4.1.4	4.1.4	4.1.10	4.2.5.2 7.3.2	4.2.5.3
(1)	(2)	(3a)	(3b)	(4)	(5)	(6)	(7)	(8)	(9a)	(9b)	(10)	(11)
3260	CORROSIVE SOLID, ACIDIC, INORGANIC, N.O.S.	8	C2	II	8	274	LQ23	P002 IBC08	B4	MP10	T3	TP33
3260	CORROSIVE SOLID, ACIDIC, INORGANIC, N.O.S.	8	C2	III	8	274	LQ24	P002 IBC08 LP02 R001	B3	MP10	T1	TP33
3261	CORROSIVE SOLID, ACIDIC, ORGANIC, N.O.S.	8	C4	I	8	274	LQ0	P002 IBC07		MP18	T6	TP9 TP33
3261	CORROSIVE SOLID, ACIDIC, ORGANIC, N.O.S.	8	C4	II	8	274	LQ23	P002 IBC08	B4	MP10	T3	TP33
3261	CORROSIVE SOLID, ACIDIC, ORGANIC, N.O.S.	8	C4	III	8	274	LQ24	P002 IBC08 LP02 R001	B3	MP10	T1	TP33
3262	CORROSIVE SOLID, BASIC, INORGANIC, N.O.S.	8	C6	I	8	274	LQ0	P002 IBC07		MP18	T6	TP9 TP33
3262	CORROSIVE SOLID, BASIC, INORGANIC, N.O.S.	8	C6	II	8	274	LQ23	P002 IBC08	B4	MP10	T3	TP33
3262	CORROSIVE SOLID, BASIC, INORGANIC, N.O.S.	8	C6	III	8	274	LQ24	P002 IBC08 LP02 R001	B3	MP10	T1	TP33
3263	CORROSIVE SOLID, BASIC, ORGANIC, N.O.S.	8	C8	I	8	274	LQ0	P002 IBC07		MP18	T6	TP9 TP33
3263	CORROSIVE SOLID, BASIC, ORGANIC, N.O.S.	8	C8	II	8	274	LQ23	P002 IBC08	B4	MP10	T3	TP33
3263	CORROSIVE SOLID, BASIC, ORGANIC, N.O.S.	8	C8	III	8	274	LQ24	P002 IBC08 LP02 R001	B3	MP10	T1	TP33
3264	CORROSIVE LIQUID, ACIDIC, INORGANIC, N.O.S.	8	C1	I	8	274	LQ0	P001		MP8 MP17	T14	TP2 TP9 TP27
3264	CORROSIVE LIQUID, ACIDIC, INORGANIC, N.O.S.	8	C1	II	8	274	LQ22	P001 IBC02		MP15	T11	TP2 TP27
3264	CORROSIVE LIQUID, ACIDIC, INORGANIC, N.O.S.	8	C1	III	8	274	LQ19	P001 IBC03 LP01 R001		MP15	T7	TP1 TP28
3265	CORROSIVE LIQUID, ACIDIC, ORGANIC, N.O.S.	8	C3	I	8	274	LQ0	P001		MP8 MP17	T14	TP2 TP9 TP27
3265	CORROSIVE LIQUID, ACIDIC, ORGANIC, N.O.S.	8	C3	II	8	274	LQ22	P001 IBC02		MP15	T11	TP2 TP27
3265	CORROSIVE LIQUID, ACIDIC, ORGANIC, N.O.S.	8	C3	III	8	274	LQ19	P001 IBC03 LP01 R001		MP15	T7	TP1 TP28
3266	CORROSIVE LIQUID, BASIC, INORGANIC, N.O.S.	8	C5	I	8	274	LQ0	P001		MP8 MP17	T14	TP2 TP9 TP27
3266	CORROSIVE LIQUID, BASIC, INORGANIC, N.O.S.	8	C5	II	8	274	LQ22	P001 IBC02		MP15	T11	TP2 TP27
3266	CORROSIVE LIQUID, BASIC, INORGANIC, N.O.S.	8	C5	III	8	274	LQ19	P001 IBC03 LP01 R001		MP15	T7	TP1 TP28
3267	CORROSIVE LIQUID, BASIC, ORGANIC, N.O.S.	8	C7	I	8	274	LQ0	P001		MP8 MP17	T14	TP2 TP9 TP27
3267	CORROSIVE LIQUID, BASIC, ORGANIC, N.O.S.	8	C7	II	8	274	LQ22	P001 IBC02		MP15	T11	TP2 TP27

ADR tank		Vehicle for tank carriage	Transport category	Special provisions for carriage				Hazard identifi-cation No.	UN No.	Name and description
Tank code	Special provisions			Packages	Bulk	Loading, unloading and handling	Operation			
4.3	4.3.5, 6.8.4	9.1.1.2	1.1.3.6	7.2.4	7.3.3	7.5.11	8.5	5.3.2.3		3.1.2
(12)	(13)	(14)	(15)	(16)	(17)	(18)	(19)	(20)	(1)	(2)
SGAN		AT	2	V11				80	3260	CORROSIVE SOLID, ACIDIC, INORGANIC, N.O.S.
SGAV		AT	3		VV9b			80	3260	CORROSIVE SOLID, ACIDIC, INORGANIC, N.O.S.
S10AN L10BH		AT	1	V10 V12			S20	88	3261	CORROSIVE SOLID, ACIDIC, ORGANIC, N.O.S.
SGAN L4BN		AT	2	V11				80	3261	CORROSIVE SOLID, ACIDIC, ORGANIC, N.O.S.
SGAV L4BN		AT	3		VV9b			80	3261	CORROSIVE SOLID, ACIDIC, ORGANIC, N.O.S.
S10AN L10BH		AT	1	V10 V12			S20	88	3262	CORROSIVE SOLID, BASIC, INORGANIC, N.O.S.
L4BN SGAN		AT	2	V11				80	3262	CORROSIVE SOLID, BASIC, INORGANIC, N.O.S.
L4BN SGAV		AT	3		VV9b			80	3262	CORROSIVE SOLID, BASIC, INORGANIC, N.O.S.
S10AN L10BH		AT	1	V10 V12			S20	88	3263	CORROSIVE SOLID, BASIC, ORGANIC, N.O.S.
SGAN L4BN		AT	2	V11				80	3263	CORROSIVE SOLID, BASIC, ORGANIC, N.O.S.
SGAV L4BN		AT	3		VV9b			80	3263	CORROSIVE SOLID, BASIC, ORGANIC, N.O.S.
L10BH		AT	1				S20	88	3264	CORROSIVE LIQUID, ACIDIC, INORGANIC, N.O.S.
L4BN		AT	2					80	3264	CORROSIVE LIQUID, ACIDIC, INORGANIC, N.O.S.
L4BN		AT	3					80	3264	CORROSIVE LIQUID, ACIDIC, INORGANIC, N.O.S.
L10BH		AT	1				S20	88	3265	CORROSIVE LIQUID, ACIDIC, ORGANIC, N.O.S.
L4BN		AT	2					80	3265	CORROSIVE LIQUID, ACIDIC, ORGANIC, N.O.S.
L4BN		AT	3					80	3265	CORROSIVE LIQUID, ACIDIC, ORGANIC, N.O.S.
L10BH		AT	1				S20	88	3266	CORROSIVE LIQUID, BASIC, INORGANIC, N.O.S.
L4BN		AT	2					80	3266	CORROSIVE LIQUID, BASIC, INORGANIC, N.O.S.
L4BN		AT	3					80	3266	CORROSIVE LIQUID, BASIC, INORGANIC, N.O.S.
L10BH		AT	1				S20	88	3267	CORROSIVE LIQUID, BASIC, ORGANIC, N.O.S.
L4BN		AT	2					80	3267	CORROSIVE LIQUID, BASIC, ORGANIC, N.O.S.

UN No.	Name and description	Class	Classification code	Packing group	Labels	Special provisions	Limited quantities	Packaging			Portable tanks and bulk containers	
								Packing instructions	Special packing provisions	Mixed packing provisions	Instructions	Special provisions
	3.1.2	2.2	2.2	2.1.1.3	5.2.2	3.3	3.4.6	4.1.4	4.1.4	4.1.10	4.2.5.2 7.3.2	4.2.5.3
(1)	(2)	(3a)	(3b)	(4)	(5)	(6)	(7)	(8)	(9a)	(9b)	(10)	(11)
3267	CORROSIVE LIQUID, BASIC, ORGANIC, N.O.S.	8	C7	III	8	274	LQ19	P001 IBC03 LP01 R001		MP15	T7	TP1 TP28
3268	AIR BAG INFLATORS or AIR BAG MODULES or SEAT-BELT PRETENSIONERS	9	M5	III	9	280 289	LQ0	P902 LP902				
3269	POLYESTER RESIN KIT	3	F1	II	3	236	LQ6	P302 R001				
3269	POLYESTER RESIN KIT	3	F1	III	3	236	LQ7	P302 R001				
3270	NITROCELLULOSE MEMBRANE FILTERS, with not more than 12.6% nitrogen, by dry mass	4.1	F1	II	4.1	237 286	LQ8	P411		MP11		
3271	ETHERS, N.O.S.	3	F1	II	3	274	LQ4	P001 IBC02 R001		MP19	T7	TP1 TP8 TP28
3271	ETHERS, N.O.S.	3	F1	III	3	274	LQ7	P001 IBC03 LP01 R001		MP19	T4	TP1 TP29
3272	ESTERS, N.O.S.	3	F1	II	3	274	LQ4	P001 IBC02 R001		MP19	T7	TP1 TP8 TP28
3272	ESTERS, N.O.S.	3	F1	III	3	274	LQ7	P001 IBC03 LP01 R001		MP19	T4	TP1 TP29
3273	NITRILES, FLAMMABLE, TOXIC, N.O.S.	3	FT1	I	3 +6.1	274	LQ0	P001		MP7 MP17	T14	TP2 TP9 TP27
3273	NITRILES, FLAMMABLE, TOXIC, N.O.S.	3	FT1	II	3 +6.1	274	LQ0	P001 IBC02		MP19	T11	TP2 TP27
3274	ALCOHOLATES SOLUTION, N.O.S., in alcohol	3	FC	II	3 +8	274	LQ4	P001 IBC02		MP19		
3275	NITRILES, TOXIC, FLAMMABLE, N.O.S.	6.1	TF1	I	6.1 +3	274 315	LQ0	P001		MP8 MP17	T14	TP2 TP9 TP27
3275	NITRILES, TOXIC, FLAMMABLE, N.O.S.	6.1	TF1	II	6.1 +3	274	LQ17	P001 IBC02		MP15	T11	TP2 TP27
3276	NITRILES, TOXIC, LIQUID, N.O.S.	6.1	T1	I	6.1	274 315	LQ0	P001		MP8 MP17	T14	TP2 TP9 TP27
3276	NITRILES, TOXIC, LIQUID, N.O.S.	6.1	T1	II	6.1	274	LQ17	P001 IBC02		MP15	T11	TP2 TP27
3276	NITRILES, TOXIC, LIQUID, N.O.S.	6.1	T1	III	6.1	274	LQ19	P001 IBC03 LP01 R001		MP15	T7	TP1 TP28
3277	CHLOROFORMATES, TOXIC, CORROSIVE, N.O.S.	6.1	TC1	II	6.1 +8	274 561	LQ17	P001 IBC02		MP15	T8	TP2 TP28
3278	ORGANOPHOSPHORUS COMPOUND, TOXIC, LIQUID, N.O.S.	6.1	T1	I	6.1	43 274 315	LQ0	P001		MP8 MP17	T14	TP2 TP9 TP27
3278	ORGANOPHOSPHORUS COMPOUND, TOXIC, LIQUID, N.O.S.	6.1	T1	II	6.1	43 274	LQ17	P001 IBC02		MP15	T11	TP2 TP27
3278	ORGANOPHOSPHORUS COMPOUND, TOXIC, LIQUID, N.O.S.	6.1	T1	III	6.1	43 274	LQ19	P001 IBC03 LP01 R001		MP15	T7	TP1 TP28
3279	ORGANOPHOSPHORUS COMPOUND, TOXIC, FLAMMABLE, N.O.S.	6.1	TF1	I	6.1 +3	43 274 315	LQ0	P001		MP8 MP17	T14	TP2 TP9 TP27

ADR tank		Vehicle for tank carriage	Transport category	Special provisions for carriage				Hazard identifi-cation No.	UN No.	Name and description
Tank code	Special provisions			Packages	Bulk	Loading, unloading and handling	Operation			
4.3	4.3.5, 6.8.4	9.1.1.2	1.1.3.6	7.2.4	7.3.3	7.5.11	8.5	5.3.2.3		3.1.2
(12)	(13)	(14)	(15)	(16)	(17)	(18)	(19)	(20)	(1)	(2)
L4BN		AT	3					80	3267	CORROSIVE LIQUID, BASIC, ORGANIC, N.O.S.
			4						3268	AIR BAG INFLATORS or AIR BAG MODULES or SEAT-BELT PRETENSIONERS
			2				S2 S20		3269	POLYESTER RESIN KIT
			3				S2		3269	POLYESTER RESIN KIT
			2						3270	NITROCELLULOSE MEMBRANE FILTERS, with not more than 12.6% nitrogen, by dry mass
LGBF		FL	2				S2 S20	33	3271	ETHERS, N.O.S.
LGBF		FL	3				S2	30	3271	ETHERS, N.O.S.
LGBF		FL	2				S2 S20	33	3272	ESTERS, N.O.S.
LGBF		FL	3				S2	30	3272	ESTERS, N.O.S.
L10CH	TU14 TU15 TE21	FL	1			CV13 CV28	S2 S19	336	3273	NITRILES, FLAMMABLE, TOXIC, N.O.S.
L4BH	TU15 TE15	FL	2			CV13 CV28	S2 S19	336	3273	NITRILES, FLAMMABLE, TOXIC, N.O.S.
L4BH	TE15	FL	2				S2 S20	338	3274	ALCOHOLATES SOLUTION, N.O.S., in alcohol
L10CH	TU14 TU15 TE19 TE21	FL	1			CV1 CV13 CV28	S2 S9 S17	663	3275	NITRILES, TOXIC, FLAMMABLE, N.O.S.
L4BH	TU15 TE15 TE19	FL	2			CV13 CV28	S2 S9 S19	63	3275	NITRILES, TOXIC, FLAMMABLE, N.O.S.
L10CH	TU14 TU15 TE19 TE21	AT	1			CV1 CV13 CV28	S9 S17	66	3276	NITRILES, TOXIC, LIQUID, N.O.S.
L4BH	TU15 TE15 TE19	AT	2			CV13 CV28	S9 S19	60	3276	NITRILES, TOXIC, LIQUID, N.O.S.
L4BH	TU15 TE15 TE19	AT	2			CV13 CV28	S9	60	3276	NITRILES, TOXIC, LIQUID, N.O.S.
L4BH	TU15 TE15 TE19	AT	2			CV13 CV28	S9 S19	68	3277	CHLOROFORMATES, TOXIC, CORROSIVE, N.O.S.
L10CH	TU14 TU15 TE19 TE21	AT	1			CV1 CV13 CV28	S9 S17	66	3278	ORGANOPHOSPHORUS COMPOUND, TOXIC, LIQUID, N.O.S.
L4BH	TU15 TE15 TE19	AT	2			CV13 CV28	S9 S19	60	3278	ORGANOPHOSPHORUS COMPOUND, TOXIC, LIQUID, N.O.S.
L4BH	TU15 TE15 TE19	AT	2			CV13 CV28	S9	60	3278	ORGANOPHOSPHORUS COMPOUND, TOXIC, LIQUID, N.O.S.
L10CH	TU14 TU15 TE19 TE21	FL	1			CV1 CV13 CV28	S2 S9 S17	663	3279	ORGANOPHOSPHORUS COMPOUND, TOXIC, FLAMMABLE, N.O.S.

UN No.	Name and description	Class	Classification code	Packing group	Labels	Special provisions	Limited quantities	Packaging			Portable tanks and bulk containers	
								Packing instructions	Special packing provisions	Mixed packing provisions	Instructions	Special provisions
	3.1.2	2.2	2.2	2.1.1.3	5.2.2	3.3	3.4.6	4.1.4	4.1.4	4.1.10	4.2.5.2 7.3.2	4.2.5.3
(1)	(2)	(3a)	(3b)	(4)	(5)	(6)	(7)	(8)	(9a)	(9b)	(10)	(11)
3279	ORGANOPHOSPHORUS COMPOUND, TOXIC, FLAMMABLE, N.O.S.	6.1	TF1	II	6.1 +3	43 274	LQ17	P001		MP15	T11	TP2 TP27
3280	ORGANOARSENIC COMPOUND, LIQUID, N.O.S.	6.1	T3	I	6.1	274 315	LQ0	P001		MP8 MP17	T14	TP2 TP9 TP27
3280	ORGANOARSENIC COMPOUND, LIQUID, N.O.S.	6.1	T3	II	6.1	274	LQ17	P001 IBC02		MP15	T11	TP2 TP27
3280	ORGANOARSENIC COMPOUND, LIQUID, N.O.S.	6.1	T3	III	6.1	274	LQ19	P001 IBC03 LP01 R001		MP15	T7	TP1 TP28
3281	METAL CARBONYLS, LIQUID, N.O.S.	6.1	T3	I	6.1	274 315 562	LQ0	P601		MP8 MP17	T14	TP2 TP9 TP27
3281	METAL CARBONYLS, LIQUID, N.O.S.	6.1	T3	II	6.1	274 562	LQ17	P001 IBC02		MP15	T11	TP2 TP27
3281	METAL CARBONYLS, LIQUID, N.O.S.	6.1	T3	III	6.1	274 562	LQ19	P001 IBC03 LP01 R001		MP15	T7	TP1 TP28
3282	ORGANOMETALLIC COMPOUND, TOXIC, LIQUID, N.O.S.	6.1	T3	I	6.1	274 562	LQ0	P001		MP8 MP17	T14	TP2 TP9 TP27
3282	ORGANOMETALLIC COMPOUND, TOXIC, LIQUID, N.O.S.	6.1	T3	II	6.1	274 562	LQ17	P001 IBC02		MP15	T11	TP2 TP27
3282	ORGANOMETALLIC COMPOUND, TOXIC, LIQUID, N.O.S.	6.1	T3	III	6.1	274 562	LQ19	P001 IBC03 LP01 R001		MP15	T7	TP1 TP28
3283	SELENIUM COMPOUND, SOLID, N.O.S.	6.1	T5	I	6.1	274 563	LQ0	P002 IBC07		MP18	T6	TP9 TP33
3283	SELENIUM COMPOUND, SOLID, N.O.S.	6.1	T5	II	6.1	274 563	LQ18	P002 IBC08	B4	MP10	T3	TP33
3283	SELENIUM COMPOUND, SOLID, N.O.S.	6.1	T5	III	6.1	274 563	LQ9	P002 IBC08 LP02 R001	B3	MP10	T1	TP33
3284	TELLURIUM COMPOUND, N.O.S.	6.1	T5	I	6.1	274	LQ0	P002 IBC07		MP18	T6	TP9 TP33
3284	TELLURIUM COMPOUND, N.O.S.	6.1	T5	II	6.1	274	LQ18	P002 IBC08	B4	MP10	T3	TP33
3284	TELLURIUM COMPOUND, N.O.S.	6.1	T5	III	6.1	274	LQ9	P002 IBC08 LP02 R001	B3	MP10	T1	TP33
3285	VANADIUM COMPOUND, N.O.S.	6.1	T5	I	6.1	274 564	LQ0	P002 IBC07		MP18	T6	TP9 TP33
3285	VANADIUM COMPOUND, N.O.S.	6.1	T5	II	6.1	274 564	LQ18	P002 IBC08	B4	MP10	T3	TP33
3285	VANADIUM COMPOUND, N.O.S.	6.1	T5	III	6.1	274 564	LQ9	P002 IBC08 LP02 R001	B3	MP10	T1	TP33
3286	FLAMMABLE LIQUID, TOXIC, CORROSIVE, N.O.S.	3	FTC	I	3 +6.1 +8	274	LQ0	P001		MP7 MP17	T14	TP2 TP9 TP27
3286	FLAMMABLE LIQUID, TOXIC, CORROSIVE, N.O.S.	3	FTC	II	3 +6.1 +8	274	LQ0	P001 IBC02		MP19	T11	TP2 TP27

ADR tank		Vehicle for tank carriage	Transport category	Special provisions for carriage				Hazard identifi-cation No.	UN No.	Name and description
Tank code	Special provisions			Packages	Bulk	Loading, unloading and handling	Operation			
4.3	4.3.5, 6.8.4	9.1.1.2	1.1.3.6	7.2.4	7.3.3	7.5.11	8.5	5.3.2.3		3.1.2
(12)	(13)	(14)	(15)	(16)	(17)	(18)	(19)	(20)	(1)	(2)
L4BH	TU15 TE15 TE19	FL	2			CV13 CV28	S2 S9 S19	63	3279	ORGANOPHOSPHORUS COMPOUND, TOXIC, FLAMMABLE, N.O.S.
L10CH	TU14 TU15 TE19 TE21	AT	1			CV1 CV13 CV28	S9 S17	66	3280	ORGANOARSENIC COMPOUND, LIQUID, N.O.S.
L4BH	TU15 TE15 TE19	AT	2			CV13 CV28	S9 S19	60	3280	ORGANOARSENIC COMPOUND, LIQUID, N.O.S.
L4BH	TU15 TE15 TE19	AT	2			CV13 CV28	S9	60	3280	ORGANOARSENIC COMPOUND, LIQUID, N.O.S.
L10CH	TU14 TU15 TE19 TE21	AT	1			CV1 CV13 CV28	S9 S17	66	3281	METAL CARBONYLS, LIQUID, N.O.S.
L4BH	TU15 TE15 TE19	AT	2			CV13 CV28	S9 S19	60	3281	METAL CARBONYLS, LIQUID, N.O.S.
L4BH	TU15 TE15 TE19	AT	2			CV13 CV28	S9	60	3281	METAL CARBONYLS, LIQUID, N.O.S.
L10CH	TU14 TU15 TE19 TE21	AT	1			CV1 CV13 CV28	S9 S17	66	3282	ORGANOMETALLIC COMPOUND, TOXIC, LIQUID, N.O.S.
L4BH	TU15 TE15 TE19	AT	2			CV13 CV28	S9 S19	60	3282	ORGANOMETALLIC COMPOUND, TOXIC, LIQUID, N.O.S.
L4BH	TU15 TE15 TE19	AT	2			CV13 CV28	S9	60	3282	ORGANOMETALLIC COMPOUND, TOXIC, LIQUID, N.O.S.
S10AH L10CH	TU14 TU15 TE19 TE21	AT	1	V10 V12		CV1 CV13 CV28	S9 S17	66	3283	SELENIUM COMPOUND, SOLID, N.O.S.
SGAH L4BH	TU15 TE15 TE19	AT	2	V11		CV13 CV28	S9 S19	60	3283	SELENIUM COMPOUND, SOLID, N.O.S.
SGAH L4BH	TU15 TE15 TE19	AT	2		VV9b	CV13 CV28	S9	60	3283	SELENIUM COMPOUND, SOLID, N.O.S.
S10AH L10CH	TU14 TU15 TE19 TE21	AT	1	V10 V12		CV1 CV13 CV28	S9 S17	66	3284	TELLURIUM COMPOUND, N.O.S.
SGAH L4BH	TU15 TE15 TE19	AT	2	V11		CV13 CV28	S9 S19	60	3284	TELLURIUM COMPOUND, N.O.S.
SGAH L4BH	TU15 TE15 TE19	AT	2		VV9b	CV13 CV28	S9	60	3284	TELLURIUM COMPOUND, N.O.S.
S10AH L10CH	TU14 TU15 TE19 TE21	AT	1	V10 V12		CV1 CV13 CV28	S9 S17	66	3285	VANADIUM COMPOUND, N.O.S.
SGAH L4BH	TU15 TE15 TE19	AT	2	V11		CV13 CV28	S9 S19	60	3285	VANADIUM COMPOUND, N.O.S.
SGAH L4BH	TU15 TE15 TE19	AT	2		VV9b	CV13 CV28	S9	60	3285	VANADIUM COMPOUND, N.O.S.
L10CH	TU14 TU15 TE21	FL	1			CV13 CV28	S2 S19	368	3286	FLAMMABLE LIQUID, TOXIC, CORROSIVE, N.O.S.
L4BH	TU15 TE15	FL	2			CV13 CV28	S2 S19	368	3286	FLAMMABLE LIQUID, TOXIC, CORROSIVE, N.O.S.

UN No.	Name and description	Class	Classification code	Packing group	Labels	Special provisions	Limited quantities	Packaging			Portable tanks and bulk containers	
								Packing instructions	Special packing provisions	Mixed packing provisions	Instructions	Special provisions
	3.1.2	2.2	2.2	2.1.1.3	5.2.2	3.3	3.4.6	4.1.4	4.1.4	4.1.10	4.2.5.2 7.3.2	4.2.5.3
(1)	(2)	(3a)	(3b)	(4)	(5)	(6)	(7)	(8)	(9a)	(9b)	(10)	(11)
3287	TOXIC LIQUID, INORGANIC, N.O.S.	6.1	T4	I	6.1	274 315	LQ0	P001		MP8 MP17	T14	TP2 TP9 TP27
3287	TOXIC LIQUID, INORGANIC, N.O.S.	6.1	T4	II	6.1	274	LQ17	P001 IBC02		MP15	T11	TP2 TP27
3287	TOXIC LIQUID, INORGANIC, N.O.S.	6.1	T4	III	6.1	274	LQ19	P001 IBC03 LP01 R001		MP15	T7	TP1 TP28
3288	TOXIC SOLID, INORGANIC, N.O.S.	6.1	T5	I	6.1	274	LQ0	P002 IBC07		MP18	T6	TP9 TP33
3288	TOXIC SOLID, INORGANIC, N.O.S.	6.1	T5	II	6.1	274	LQ18	P002 IBC08	B4	MP10	T3	TP33
3288	TOXIC SOLID, INORGANIC, N.O.S.	6.1	T5	III	6.1	274	LQ9	P002 IBC08 LP02 R001	B3	MP10	T1	TP33
3289	TOXIC LIQUID, CORROSIVE, INORGANIC, N.O.S.	6.1	TC3	I	6.1 +8	274 315	LQ0	P001		MP8 MP17	T14	TP2 TP9 TP27
3289	TOXIC LIQUID, CORROSIVE, INORGANIC, N.O.S.	6.1	TC3	II	6.1 +8	274	LQ17	P001 IBC02		MP15	T11	TP2 TP27
3290	TOXIC SOLID, CORROSIVE, INORGANIC, N.O.S.	6.1	TC4	I	6.1 +8	274	LQ0	P002 IBC05		MP18	T6	TP9 TP33
3290	TOXIC SOLID, CORROSIVE, INORGANIC, N.O.S.	6.1	TC4	II	6.1 +8	274	LQ18	P002 IBC06		MP15	T3	TP33
3291	CLINICAL WASTE, UNSPECIFIED, N.O.S. or (BIO) MEDICAL WASTE, N.O.S. or REGULATED MEDICAL WASTE, N.O.S.	6.2	I3	II	6.2	565 634	LQ0	P621 IBC620 LP621		MP6		
3292	BATTERIES, CONTAINING SODIUM, or CELLS, CONTAINING SODIUM	4.3	W3	II	4.3	239 295	LQ0	P408				
3293	HYDRAZINE, AQUEOUS SOLUTION with not more than 37% hydrazine, by mass	6.1	T4	III	6.1	566	LQ19	P001 IBC03 LP01 R001		MP15	T4	TP1
3294	HYDROGEN CYANIDE, SOLUTION IN ALCOHOL with not more than 45% hydrogen cyanide	6.1	TF1	I	6.1 +3	610	LQ0	P601 PR3		MP8 MP17	T14	TP2
3295	HYDROCARBONS, LIQUID, N.O.S. (vapour pressure at 50 °C more than 175 kPa)	3	F1	I	3	640A	LQ3	P001		MP7 MP17	T11	TP1 TP8 TP9 TP28
3295	HYDROCARBONS, LIQUID, N.O.S. (vapour pressure at 50 °C more than 110 kPa but not more than 175 kPa)	3	F1	I	3	640B	LQ3	P001		MP7 MP17	T11	TP1 TP8 TP9 TP28
3295	HYDROCARBONS, LIQUID, N.O.S. (vapour pressure at 50 °C not more than 110 kPa)	3	F1	I	3	640P 649	LQ3	P001		MP7 MP17	T11	TP1 TP8 TP9 TP28
3295	HYDROCARBONS, LIQUID, N.O.S. (vapour pressure at 50 °C more than 110 kPa but not more than 175 kPa)	3	F1	II	3	640C 649	LQ4	P001		MP19	T7	TP1 TP8 TP28

ADR tank		Vehicle for tank carriage	Transport category	Special provisions for carriage				Hazard identification No.	UN No.	Name and description
Tank code	Special provisions			Packages	Bulk	Loading, unloading and handling	Operation			
4.3	4.3.5, 6.8.4	9.1.1.2	1.1.3.6	7.2.4	7.3.3	7.5.11	8.5	5.3.2.3		3.1.2
(12)	(13)	(14)	(15)	(16)	(17)	(18)	(19)	(20)	(1)	(2)
L10CH	TU14 TU15 TE19 TE21	AT	1			CV1 CV13 CV28	S9 S17	66	3287	TOXIC LIQUID, INORGANIC, N.O.S.
L4BH	TU15 TE15 TE19	AT	2			CV13 CV28	S9 S19	60	3287	TOXIC LIQUID, INORGANIC, N.O.S.
L4BH	TU15 TE15 TE19	AT	2			CV13 CV28	S9	60	3287	TOXIC LIQUID, INORGANIC, N.O.S.
S10AH L10CH	TU14 TU15 TE19 TE21	AT	1			CV1 CV13 CV28	S9 S17	66	3288	TOXIC SOLID, INORGANIC, N.O.S.
SGAH L4BH	TU15 TE15 TE19	AT	2	V11		CV13 CV28	S9 S19	60	3288	TOXIC SOLID, INORGANIC, N.O.S.
SGAH L4BH	TU15 TE15 TE19	AT	2		VV9b	CV13 CV28	S9	60	3288	TOXIC SOLID, INORGANIC, N.O.S.
L10CH	TU14 TU15 TE19 TE21	AT	1			CV1 CV13 CV28	S9 S17	668	3289	TOXIC LIQUID, CORROSIVE, INORGANIC, N.O.S.
L4BH	TU15 TE15 TE19	AT	2			CV13 CV28	S9 S19	68	3289	TOXIC LIQUID, CORROSIVE, INORGANIC, N.O.S.
L10CH S10AH	TU15 TE19	AT	1			CV1 CV13 CV28	S9 S17	668	3290	TOXIC SOLID, CORROSIVE, INORGANIC, N.O.S.
SGAH L4BH	TU15 TE15 TE19	AT	2	V11 V12		CV13 CV28	S9 S19	68	3290	TOXIC SOLID, CORROSIVE, INORGANIC, N.O.S.
L4BH S4AH	TU15 TE15 TE19	AT	2	V1	VV11	CV13 CV25 CV28	S3	606	3291	CLINICAL WASTE, UNSPECIFIED, N.O.S. or (BIO) MEDICAL WASTE, N.O.S. or REGULATED MEDICAL WASTE, N.O.S.
			2	V1		CV23			3292	BATTERIES, CONTAINING SODIUM, or CELLS, CONTAINING SODIUM
L4BH	TU15 TE15 TE19	AT	2			CV13 CV28	S9	60	3293	HYDRAZINE, AQUEOUS SOLUTION with not more than 37% hydrazine, by mass
L15DH(+)	TU14 TU15 TE19 TE21	FL	0			CV1 CV13 CV28	S2 S9 S17	663	3294	HYDROGEN CYANIDE, SOLUTION IN ALCOHOL with not more than 45% hydrogen cyanide
L4BN		FL	1				S2 S20	33	3295	HYDROCARBONS, LIQUID, N.O.S. (vapour pressure at 50 °C more than 175 kPa)
L1.5BN		FL	1				S2 S20	33	3295	HYDROCARBONS, LIQUID, N.O.S. (vapour pressure at 50 °C more than 110 kPa but not more than 175 kPa)
L1.5BN		FL	1				S2 S20	33	3295	HYDROCARBONS, LIQUID, N.O.S. (vapour pressure at 50 °C not more than 110 kPa)
L1.5BN		FL	2				S2 S20	33	3295	HYDROCARBONS, LIQUID, N.O.S. (vapour pressure at 50 °C more than 110 kPa but not more than 175 kPa)

UN No.	Name and description	Class	Classification code	Packing group	Labels	Special provisions	Limited quantities	Packaging			Portable tanks and bulk containers	
								Packing instructions	Special packing provisions	Mixed packing provisions	Instructions	Special provisions
	3.1.2	2.2	2.2	2.1.1.3	5.2.2	3.3	3.4.6	4.1.4	4.1.4	4.1.10	4.2.5.2 7.3.2	4.2.5.3
(1)	(2)	(3a)	(3b)	(4)	(5)	(6)	(7)	(8)	(9a)	(9b)	(10)	(11)
3295	HYDROCARBONS, LIQUID, N.O.S. (vapour pressure at 50 °C not more than 110 kPa)	3	F1	II	3	640D 649	LQ4	P001 IBC02 R001		MP19	T7	TP1 TP8 TP28
3295	HYDROCARBONS, LIQUID, N.O.S.	3	F1	III	3		LQ7	P001 IBC03 LP01 R001		MP19	T4	TP1 TP29
3296	HEPTAFLUOROPROPANE (REFRIGERANT GAS R 227)	2	2A		2.2		LQ1	P200		MP9	(M) T50	
3297	ETHYLENE OXIDE AND CHLOROTETRAFLUORO-ETHANE MIXTURE with not more than 8.8% ethylene oxide	2	2A		2.2		LQ1	P200		MP9	(M) T50	
3298	ETHYLENE OXIDE AND PENTAFLUOROETHANE MIXTURE with not more than 7.9% ethylene oxide	2	2A		2.2		LQ1	P200		MP9	(M) T50	
3299	ETHYLENE OXIDE AND TETRAFLUOROETHANE MIXTURE with not more than 5.6% ethylene oxide	2	2A		2.2		LQ1	P200		MP9	(M) T50	
3300	ETHYLENE OXIDE AND CARBON DIOXIDE MIXTURE with more than 87% ethylene oxide	2	2TF		2.3 +2.1		LQ0	P200		MP9	(M)	
3301	CORROSIVE LIQUID, SELF-HEATING, N.O.S.	8	CS1	I	8 +4.2	274	LQ0	P001		MP8 MP17		
3301	CORROSIVE LIQUID, SELF-HEATING, N.O.S.	8	CS1	II	8 +4.2	274	LQ22	P001		MP15		
3302	2-DIMETHYLAMINOETHYL ACRYLATE	6.1	T1	II	6.1		LQ17	P001 IBC02		MP15	T7	TP2
3303	COMPRESSED GAS, TOXIC, OXIDIZING, N.O.S.	2	1TO		2.3 +5.1	274	LQ0	P200		MP9	(M)	
3304	COMPRESSED GAS, TOXIC, CORROSIVE, N.O.S.	2	1TC		2.3 +8	274	LQ0	P200		MP9	(M)	
3305	COMPRESSED GAS, TOXIC, FLAMMABLE, CORROSIVE, N.O.S.	2	1TFC		2.3 +2.1 +8	274	LQ0	P200		MP9	(M)	
3306	COMPRESSED GAS, TOXIC, OXIDIZING, CORROSIVE, N.O.S.	2	1TOC		2.3 +5.1 +8	274	LQ0	P200		MP9	(M)	
3307	LIQUEFIED GAS, TOXIC, OXIDIZING, N.O.S.	2	2TO		2.3 +5.1	274	LQ0	P200		MP9	(M)	
3308	LIQUEFIED GAS, TOXIC, CORROSIVE, N.O.S.	2	2TC		2.3 +8	274	LQ0	P200		MP9	(M)	
3309	LIQUEFIED GAS, TOXIC, FLAMMABLE, CORROSIVE, N.O.S.	2	2TFC		2.3 +2.1 +8	274	LQ0	P200		MP9	(M)	
3310	LIQUEFIED GAS, TOXIC, OXIDIZING, CORROSIVE, N.O.S.	2	2TOC		2.3 +5.1 +8	274	LQ0	P200		MP9	(M)	
3311	GAS, REFRIGERATED LIQUID, OXIDIZING, N.O.S.	2	3O		2.2 +5.1	274	LQ0	P203		MP9	T75	TP5 TP22
3312	GAS, REFRIGERATED LIQUID, FLAMMABLE, N.O.S.	2	3F		2.1	274	LQ0	P203		MP9	T75	TP5

ADR tank		Vehicle for tank carriage	Transport category	Special provisions for carriage				Hazard identification No.	UN No.	Name and description
Tank code	Special provisions			Packages	Bulk	Loading, unloading and handling	Operation			
4.3	4.3.5, 6.8.4	9.1.1.2	1.1.3.6	7.2.4	7.3.3	7.5.11	8.5	5.3.2.3		3.1.2
(12)	(13)	(14)	(15)	(16)	(17)	(18)	(19)	(20)	(1)	(2)
LGBF		FL	2				S2 S20	33	3295	HYDROCARBONS, LIQUID, N.O.S. (vapour pressure at 50 °C not more than 110 kPa)
LGBF		FL	3				S2	30	3295	HYDROCARBONS, LIQUID, N.O.S.
PxBN(M)		AT	3			CV9 CV10 CV36		20	3296	HEPTAFLUOROPROPANE (REFRIGERANT GAS R 227)
PxBN(M)		AT	3			CV9 CV10 CV36		20	3297	ETHYLENE OXIDE AND CHLOROTETRAFLUORO-ETHANE MIXTURE with not more than 8.8% ethylene oxide
PxBN(M)		AT	3			CV9 CV10 CV36		20	3298	ETHYLENE OXIDE AND PENTAFLUOROETHANE MIXTURE with not more than 7.9% ethylene oxide
PxBN(M)		AT	3			CV9 CV10 CV36		20	3299	ETHYLENE OXIDE AND TETRAFLUOROETHANE MIXTURE with not more than 5.6% ethylene oxide
PxBH(M)		FL	1			CV9 CV10 CV36	S2 S7 S17	263	3300	ETHYLENE OXIDE AND CARBON DIOXIDE MIXTURE with more than 87% ethylene oxide
L10BH		AT	1				S20	884	3301	CORROSIVE LIQUID, SELF-HEATING, N.O.S.
L4BN		AT	2					84	3301	CORROSIVE LIQUID, SELF-HEATING, N.O.S.
L4BH	TU15 TE15 TE19	AT	2			CV13 CV28	S9 S19	60	3302	2-DIMETHYLAMINOETHYL ACRYLATE
CxBH(M)	TU6	AT	1			CV9 CV10 CV36	S7 S17	265	3303	COMPRESSED GAS, TOXIC, OXIDIZING, N.O.S.
CxBH(M)	TU6	AT	1			CV9 CV10 CV36	S7 S17	268	3304	COMPRESSED GAS, TOXIC, CORROSIVE, N.O.S.
CxBH(M)	TU6	FL	1			CV9 CV10 CV36	S2 S7 S17	263	3305	COMPRESSED GAS, TOXIC, FLAMMABLE, CORROSIVE, N.O.S.
CxBH(M)	TU6	AT	1			CV9 CV10 CV36	S7 S17	265	3306	COMPRESSED GAS, TOXIC, OXIDIZING, CORROSIVE, N.O.S.
PxBH(M)	TU6	AT	1			CV9 CV10 CV36	S7 S17	265	3307	LIQUEFIED GAS, TOXIC, OXIDIZING, N.O.S.
PxBH(M)	TU6	AT	1			CV9 CV10 CV36	S7 S17	268	3308	LIQUEFIED GAS, TOXIC, CORROSIVE, N.O.S.
PxBH(M)	TU6	FL	1			CV9 CV10 CV36	S2 S7 S17	263	3309	LIQUEFIED GAS, TOXIC, FLAMMABLE, CORROSIVE, N.O.S.
PxBH(M)	TU6	AT	1			CV9 CV10 CV36	S7 S17	265	3310	LIQUEFIED GAS, TOXIC, OXIDIZING, CORROSIVE, N.O.S.
RxBN	TU7 TU19	AT	3	V5		CV9 CV11 CV36	S20	225	3311	GAS, REFRIGERATED LIQUID, OXIDIZING, N.O.S.
RxBN	TU18	FL	2	V5		CV9 CV11 CV36	S2 S17	223	3312	GAS, REFRIGERATED LIQUID, FLAMMABLE, N.O.S.

UN No.	Name and description	Class	Classification code	Packing group	Labels	Special provisions	Limited quantities	Packaging			Portable tanks and bulk containers	
								Packing instructions	Special packing provisions	Mixed packing provisions	Instructions	Special provisions
	3.1.2	2.2	2.2	2.1.1.3	5.2.2	3.3	3.4.6	4.1.4	4.1.4	4.1.10	4.2.5.2 7.3.2	4.2.5.3
(1)	(2)	(3a)	(3b)	(4)	(5)	(6)	(7)	(8)	(9a)	(9b)	(10)	(11)
3313	ORGANIC PIGMENTS, SELF-HEATING	4.2	S2	II	4.2		LQ0	P002 IBC08	B4	MP14	T3	TP33
3313	ORGANIC PIGMENTS, SELF-HEATING	4.2	S2	III	4.2		LQ0	P002 IBC08 LP02 R001	B3	MP14	T1	TP33
3314	PLASTICS MOULDING COMPOUND in dough, sheet or extruded rope form evolving flammable vapour	9	M3	III	None	207 633	LQ27	P002 IBC08 R001	PP14 B3 B6	MP10		
3315	CHEMICAL SAMPLE, TOXIC	6.1	T8	I	6.1	250	LQ0	P099		MP8 MP17		
3316	CHEMICAL KIT or FIRST AID KIT	9	M11	II	9	251	LQ0	P901				
3316	CHEMICAL KIT or FIRST AID KIT	9	M11	III	9	251	LQ0	P901				
3317	2-AMINO-4,6-DINITROPHENOL, WETTED with not less than 20% water, by mass	4.1	D	I	4.1		LQ0	P406	PP26	MP2		
3318	AMMONIA SOLUTION, relative density less than 0.880 at 15 °C in water, with more than 50% ammonia	2	4TC		2.3 +8	23	LQ0	P200		MP9	(M) T50	
3319	NITROGLYCERIN MIXTURE, DESENSITIZED, SOLID, N.O.S. with more than 2% but not more than 10% nitroglycerin, by mass	4.1	D	II	4.1	272 274	LQ0	P099 IBC99		MP2		
3320	SODIUM BOROHYDRIDE AND SODIUM HYDROXIDE SOLUTION, with not more than 12% sodium borohydride and not more than 40% sodium hydroxide by mass	8	C5	II	8		LQ22	P001 IBC02		MP15	T7	TP2
3320	SODIUM BOROHYDRIDE AND SODIUM HYDROXIDE SOLUTION, with not more than 12% sodium borohydride and not more than 40% sodium hydroxide by mass	8	C5	III	8		LQ19	P001 IBC03 LP01 R001		MP15	T4	TP2
3321	RADIOACTIVE MATERIAL, LOW SPECIFIC ACTIVITY (LSA-II), non fissile or fissile-excepted	7			7X	172 317	LQ0	See 2.2.7 and 4.1.9	See 4.1.9.1.3		T5	TP4
3322	RADIOACTIVE MATERIAL, LOW SPECIFIC ACTIVITY (LSA-III), non fissile or fissile-excepted	7			7X	172 317	LQ0	See 2.2.7 and 4.1.9	See 4.1.9.1.3		T5	TP4
3323	RADIOACTIVE MATERIAL, TYPE C PACKAGE, non fissile or fissile-excepted	7			7X	172 317	LQ0	See 2.2.7 and 4.1.9	See 4.1.9.1.3			
3324	RADIOACTIVE MATERIAL, LOW SPECIFIC ACTIVITY (LSA-II), FISSILE	7			7X +7E	172	LQ0	See 2.2.7 and 4.1.9	See 4.1.9.1.3			
3325	RADIOACTIVE MATERIAL, LOW SPECIFIC ACTIVITY, (LSA-III), FISSILE	7			7X +7E	172	LQ0	See 2.2.7 and 4.1.9	See 4.1.9.1.3			

ADR tank		Vehicle for tank carriage	Transport category	Special provisions for carriage				Hazard identification No.	UN No.	Name and description
Tank code	Special provisions			Packages	Bulk	Loading, unloading and handling	Operation			
4.3	4.3.5, 6.8.4	9.1.1.2	1.1.3.6	7.2.4	7.3.3	7.5.11	8.5	5.3.2.3		3.1.2
(12)	(13)	(14)	(15)	(16)	(17)	(18)	(19)	(20)	(1)	(2)
SGAV		AT	2	V1				40	3313	ORGANIC PIGMENTS, SELF-HEATING
SGAV		AT	3	V1				40	3313	ORGANIC PIGMENTS, SELF-HEATING
			3		VV3			90	3314	PLASTICS MOULDING COMPOUND in dough, sheet or extruded rope form evolving flammable vapour
			1			CV1 CV13 CV28	S9 S17		3315	CHEMICAL SAMPLE, TOXIC
			2						3316	CHEMICAL KIT or FIRST AID KIT
			3						3316	CHEMICAL KIT or FIRST AID KIT
			1				S17		3317	2-AMINO-4,6-DINITROPHENOL, WETTED with not less than 20% water, by mass
PxBH(M)		AT	1			CV9 CV10	S7	268	3318	AMMONIA SOLUTION, relative density less than 0.880 at 15 °C in water, with more than 50% ammonia
			2				S17		3319	NITROGLYCERIN MIXTURE, DESENSITIZED, SOLID, N.O.S. with more than 2% but not more than 10% nitroglycerin, by mass
L4BN		AT	2					80	3320	SODIUM BOROHYDRIDE AND SODIUM HYDROXIDE SOLUTION, with not more than 12% sodium borohydride and not more than 40% sodium hydroxide by mass
L4BN		AT	3					80	3320	SODIUM BOROHYDRIDE AND SODIUM HYDROXIDE SOLUTION, with not more than 12% sodium borohydride and not more than 40% sodium hydroxide by mass
L2.65CN(+) S2.65AN(+)	TU36 TM7 TT7	AT	0			CV33	S6 S11 S13 S21	70	3321	RADIOACTIVE MATERIAL, LOW SPECIFIC ACTIVITY (LSA-II), non fissile or fissile-excepted
L2.65CN(+) S2.65AN(+)	TU36 TM7 TT7	AT	0			CV33	S6 S11 S13 S21	70	3322	RADIOACTIVE MATERIAL, LOW SPECIFIC ACTIVITY (LSA-III), non fissile or fissile-excepted
			0			CV33	S6 S11 S13 S21	70	3323	RADIOACTIVE MATERIAL, TYPE C PACKAGE, non fissile or fissile-excepted
			0			CV33	S6 S11 S13 S21	70	3324	RADIOACTIVE MATERIAL, LOW SPECIFIC ACTIVITY (LSA-II), FISSILE
			0			CV33	S6 S11 S13 S21	70	3325	RADIOACTIVE MATERIAL, LOW SPECIFIC ACTIVITY, (LSA-III), FISSILE

UN No.	Name and description	Class	Classification code	Packing group	Labels	Special provisions	Limited quantities	Packaging			Portable tanks and bulk containers	
								Packing instructions	Special packing provisions	Mixed packing provisions	Instructions	Special provisions
	3.1.2	2.2	2.2	2.1.1.3	5.2.2	3.3	3.4.6	4.1.4	4.1.4	4.1.10	4.2.5.2 7.3.2	4.2.5.3
(1)	(2)	(3a)	(3b)	(4)	(5)	(6)	(7)	(8)	(9a)	(9b)	(10)	(11)
3326	RADIOACTIVE MATERIAL, SURFACE CONTAMINATED OBJECTS (SCO-I or SCO-II), FISSILE	7			7X +7E	172	LQ0	See 2.2.7 and 4.1.9	See 4.1.9.1.3			
3327	RADIOACTIVE MATERIAL, TYPE A PACKAGE, FISSILE, non-special form	7			7X +7E	172	LQ0	See 2.2.7 and 4.1.9	See 4.1.9.1.3			
3328	RADIOACTIVE MATERIAL, TYPE B(U) PACKAGE, FISSILE	7			7X +7E	172	LQ0	See 2.2.7 and 4.1.9	See 4.1.9.1.3			
3329	RADIOACTIVE MATERIAL, TYPE B(M) PACKAGE, FISSILE	7			7X +7E	172	LQ0	See 2.2.7 and 4.1.9	See 4.1.9.1.3			
3330	RADIOACTIVE MATERIAL, TYPE C PACKAGE, FISSILE	7			7X +7E	172	LQ0	See 2.2.7 and 4.1.9	See 4.1.9.1.3			
3331	RADIOACTIVE MATERIAL, TRANSPORTED UNDER SPECIAL ARRANGEMENT, FISSILE	7			7X +7E	172	LQ0	See 2.2.7 and 4.1.9	See 4.1.9.1.3			
3332	RADIOACTIVE MATERIAL, TYPE A PACKAGE, SPECIAL FORM, non fissile or fissile-excepted	7			7X	172 317	LQ0	See 2.2.7 and 4.1.9	See 4.1.9.1.3			
3333	RADIOACTIVE MATERIAL, TYPE A PACKAGE, SPECIAL FORM, FISSILE	7			7X +7E	172	LQ0	See 2.2.7 and 4.1.9	See 4.1.9.1.3			
3334	Aviation regulated liquid, n.o.s.	9	M11	NOT SUBJECT TO ADR								
3335	Aviation regulated solid, n.o.s.	9	M11	NOT SUBJECT TO ADR								
3336	MERCAPTANS, LIQUID, FLAMMABLE, N.O.S. or MERCAPTAN MIXTURE, LIQUID, FLAMMABLE, N.O.S.	3	F1	I	3	274	LQ3	P001		MP7 MP17	T11	TP2
3336	MERCAPTANS, LIQUID, FLAMMABLE, N.O.S. or MERCAPTAN MIXTURE, LIQUID, FLAMMABLE, N.O.S. (vapour pressure at 50 °C more than 110 kPa but not more than 175 kPa)	3	F1	II	3	274 640C	LQ4	P001		MP19	T7	TP1 TP8 TP28
3336	MERCAPTANS, LIQUID, FLAMMABLE, N.O.S. or MERCAPTAN MIXTURE, LIQUID, FLAMMABLE, N.O.S. (vapour pressure at 50 °C not more than 110 kPa)	3	F1	II	3	274 640D	LQ4	P001 IBC02 R001		MP19	T7	TP1 TP8 TP28
3336	MERCAPTANS, LIQUID, FLAMMABLE, N.O.S. or MERCAPTAN MIXTURE, LIQUID, FLAMMABLE, N.O.S.	3	F1	III	3	274	LQ7	P001 IBC03 LP01 R001		MP19	T4	TP1 TP29

ADR tank		Vehicle for tank carriage	Transport category	Special provisions for carriage				Hazard identifi-cation No.	UN No.	Name and description
Tank code	Special provisions			Packages	Bulk	Loading, unloading and handling	Operation			
4.3	4.3.5, 6.8.4	9.1.1.2	1.1.3.6	7.2.4	7.3.3	7.5.11	8.5	5.3.2.3		3.1.2
(12)	(13)	(14)	(15)	(16)	(17)	(18)	(19)	(20)	(1)	(2)
			0			CV33	S6 S11 S13 S21	70	3326	RADIOACTIVE MATERIAL, SURFACE CONTAMINATED OBJECTS (SCO-I or SCO-II), FISSILE
			0			CV33	S6 S11 S13 S21	70	3327	RADIOACTIVE MATERIAL, TYPE A PACKAGE, FISSILE, non-special form
			0			CV33	S6 S11 S13 S21	70	3328	RADIOACTIVE MATERIAL, TYPE B(U) PACKAGE, FISSILE
			0			CV33	S6 S11 S13 S21	70	3329	RADIOACTIVE MATERIAL, TYPE B(M) PACKAGE, FISSILE
			0			CV33	S6 S11 S13 S21	70	3330	RADIOACTIVE MATERIAL, TYPE C PACKAGE, FISSILE
			0			CV33	S6 S11 S13 S21	70	3331	RADIOACTIVE MATERIAL, TRANSPORTED UNDER SPECIAL ARRANGEMENT, FISSILE
			0			CV33	S6 S11 S12 S13 S21	70	3332	RADIOACTIVE MATERIAL, TYPE A PACKAGE, SPECIAL FORM, non fissile or fissile-excepted
			0			CV33	S6 S11 S13 S21	70	3333	RADIOACTIVE MATERIAL, TYPE A PACKAGE, SPECIAL FORM, FISSILE
NOT SUBJECT TO ADR									3334	Aviation regulated liquid, n.o.s.
NOT SUBJECT TO ADR									3335	Aviation regulated solid, n.o.s.
L1.5BN		FL	1				S2 S20	33	3336	MERCAPTANS, LIQUID, FLAMMABLE, N.O.S. or MERCAPTAN MIXTURE, LIQUID, FLAMMABLE, N.O.S.
L1.5BN		FL	2				S2 S20	33	3336	MERCAPTANS, LIQUID, FLAMMABLE, N.O.S. or MERCAPTAN MIXTURE, LIQUID, FLAMMABLE, N.O.S. (vapour pressure at 50 °C more than 110 kPa but not more than 175 kPa)
LGBF		FL	2				S2 S20	33	3336	MERCAPTANS, LIQUID, FLAMMABLE, N.O.S. or MERCAPTAN MIXTURE, LIQUID, FLAMMABLE, N.O.S. (vapour pressure at 50 °C not more than 110 kPa)
LGBF		FL	3				S2	30	3336	MERCAPTANS, LIQUID, FLAMMABLE, N.O.S. or MERCAPTAN MIXTURE, LIQUID, FLAMMABLE, N.O.S.

UN No.	Name and description	Class	Classification code	Packing group	Labels	Special provisions	Limited quantities	Packaging			Portable tanks and bulk containers	
								Packing instructions	Special packing provisions	Mixed packing provisions	Instructions	Special provisions
	3.1.2	2.2	2.2	2.1.1.3	5.2.2	3.3	3.4.6	4.1.4	4.1.4	4.1.10	4.2.5.2 7.3.2	4.2.5.3
(1)	(2)	(3a)	(3b)	(4)	(5)	(6)	(7)	(8)	(9a)	(9b)	(10)	(11)
3337	REFRIGERANT GAS R 404A (Pentafluoroethane, 1,1,1-trifluoroethane, and 1,1,1,2-tetrafluoroethane zeotropic mixture with approximately 44% pentafluoroethane and 52% 1,1,1-trifluoroethane)	2	2A		2.2		LQ1	P200		MP9	(M) T50	
3338	REFRIGERANT GAS R 407A (Difluoromethane, pentafluoroethane, and 1,1,1,2-tetrafluoroethane zeotropic mixture with approximately 20% difluoromethane and 40% pentafluoroethane)	2	2A		2.2		LQ1	P200		MP9	(M) T50	
3339	REFRIGERANT GAS R 407B (Difluoromethane, pentafluoroethane, and 1,1,1,2-tetrafluoroethane zeotropic mixture with approximately 10% difluoromethane and 70% pentafluoroethane	2	2A		2.2		LQ1	P200		MP9	(M) T50	
3340	REFRIGERANT GAS R 407C (Difluoromethane, pentafluoroethane, and 1,1,1,2-tetrafluoroethane zeotropic mixture with approximately 23% difluoromethane and 25% pentafluoroethane)	2	2A		2.2		LQ1	P200		MP9	(M) T50	
3341	THIOUREA DIOXIDE	4.2	S2	II	4.2		LQ0	P002 IBC06		MP14	T3	TP33
3341	THIOUREA DIOXIDE	4.2	S2	III	4.2		LQ0	P002 IBC08 LP02 R001	B3	MP14	T1	TP33
3342	XANTHATES	4.2	S2	II	4.2		LQ0	P002 IBC06		MP14	T3	TP33
3342	XANTHATES	4.2	S2	III	4.2		LQ0	P002 IBC08 LP02 R001	B3	MP14	T1	TP33
3343	NITROGLYCERIN MIXTURE, DESENSITIZED, LIQUID, FLAMMABLE, N.O.S. with not more than 30% nitroglycerin, by mass	3	D		3	274 278	LQ0	P099		MP2		
3344	PENTAERYTHRITE TETRANITRATE MIXTURE, DESENSITIZED, SOLID, N.O.S. with more than 10% but not more than 20% PETN, by mass	4.1	D	II	4.1	272 274	LQ0	P099		MP2		
3345	PHENOXYACETIC ACID DERIVATIVE PESTICIDE, SOLID, TOXIC	6.1	T7	I	6.1	61 648	LQ0	P002 IBC07		MP18	T6	TP33
3345	PHENOXYACETIC ACID DERIVATIVE PESTICIDE, SOLID, TOXIC	6.1	T7	II	6.1	61 648	LQ18	P002 IBC08	B4	MP10	T3	TP33
3345	PHENOXYACETIC ACID DERIVATIVE PESTICIDE, SOLID, TOXIC	6.1	T7	III	6.1	61 648	LQ9	P002 IBC08 LP02 R001	B3	MP10	T1	TP33

ADR tank		Vehicle for tank carriage	Transport category	Special provisions for carriage				Hazard identification No.	UN No.	Name and description
Tank code	Special provisions			Packages	Bulk	Loading, unloading and handling	Operation			
4.3	4.3.5, 6.8.4	9.1.1.2	1.1.3.6	7.2.4	7.3.3	7.5.11	8.5	5.3.2.3		3.1.2
(12)	(13)	(14)	(15)	(16)	(17)	(18)	(19)	(20)	(1)	(2)
PxBN(M)		AT	3			CV9 CV10 CV36		20	3337	REFRIGERANT GAS R 404A (Pentafluoroethane, 1,1,1-trifluoroethane, and 1,1,1,2-tetrafluoroethane zeotropic mixture with approximately 44% pentafluoroethane and 52% 1,1,1-trifluoroethane)
PxBN(M)		AT	3			CV9 CV10 CV36		20	3338	REFRIGERANT GAS R 407A (Difluoromethane, pentafluoroethane, and 1,1,1,2-tetrafluoroethane zeotropic mixture with approximately 20% difluoromethane and 40% pentafluoroethane)
PxBN(M)		AT	3			CV9 CV10 CV36		20	3339	REFRIGERANT GAS R 407B (Difluoromethane, pentafluoroethane, and 1,1,1,2-tetrafluoroethane zeotropic mixture with approximately 10% difluoromethane and 70% pentafluoroethane
PxBN(M)		AT	3			CV9 CV10 CV36		20	3340	REFRIGERANT GAS R 407C (Difluoromethane, pentafluoroethane, and 1,1,1,2-tetrafluoroethane zeotropic mixture with approximately 23% difluoromethane and 25% pentafluoroethane)
SGAV		AT	2	V1 V12				40	3341	THIOUREA DIOXIDE
SGAV		AT	3	V1				40	3341	THIOUREA DIOXIDE
SGAV		AT	2	V1 V12				40	3342	XANTHATES
SGAV		AT	3	V1				40	3342	XANTHATES
			0				S2 S17		3343	NITROGLYCERIN MIXTURE, DESENSITIZED, LIQUID, FLAMMABLE, N.O.S. with not more than 30% nitroglycerin, by mass
			2				S17		3344	PENTAERYTHRITE TETRANITRATE MIXTURE, DESENSITIZED, SOLID, N.O.S. with more than 10% but not more than 20% PETN, by mass
S10AH L10CH	TU14 TU15 TE19 TE21	AT	1	V10 V12		CV1 CV13 CV28	S9 S17	66	3345	PHENOXYACETIC ACID DERIVATIVE PESTICIDE, SOLID, TOXIC
SGAH L4BH	TU15 TE15 TE19	AT	2	V11		CV13 CV28	S9 S19	60	3345	PHENOXYACETIC ACID DERIVATIVE PESTICIDE, SOLID, TOXIC
SGAH L4BH	TU15 TE15 TE19	AT	2		VV9b	CV13 CV28	S9	60	3345	PHENOXYACETIC ACID DERIVATIVE PESTICIDE, SOLID, TOXIC

UN No.	Name and description	Class	Classification code	Packing group	Labels	Special provisions	Limited quantities	Packaging			Portable tanks and bulk containers	
								Packing instructions	Special packing provisions	Mixed packing provisions	Instructions	Special provisions
	3.1.2	2.2	2.2	2.1.1.3	5.2.2	3.3	3.4.6	4.1.4	4.1.4	4.1.10	4.2.5.2 7.3.2	4.2.5.3
(1)	(2)	(3a)	(3b)	(4)	(5)	(6)	(7)	(8)	(9a)	(9b)	(10)	(11)
3346	PHENOXYACETIC ACID DERIVATIVE PESTICIDE, LIQUID, FLAMMABLE, TOXIC, flash-point less than 23 °C	3	FT2	I	3 +6.1	61	LQ3	P001		MP7 MP17	T14	TP2 TP9 TP27
3346	PHENOXYACETIC ACID DERIVATIVE PESTICIDE, LIQUID, FLAMMABLE, TOXIC, flash-point less than 23 °C	3	FT2	II	3 +6.1	61	LQ4	P001 IBC02 R001		MP19	T11	TP2 TP27
3347	PHENOXYACETIC ACID DERIVATIVE PESTICIDE, LIQUID, TOXIC, FLAMMABLE, flash-point not less than 23 °C	6.1	TF2	I	6.1 +3	61	LQ0	P001		MP8 MP17	T14	TP2 TP9 TP27
3347	PHENOXYACETIC ACID DERIVATIVE PESTICIDE, LIQUID, TOXIC, FLAMMABLE, flash-point not less than 23 °C	6.1	TF2	II	6.1 +3	61	LQ17	P001 IBC02		MP15	T11	TP2 TP27
3347	PHENOXYACETIC ACID DERIVATIVE PESTICIDE, LIQUID, TOXIC, FLAMMABLE, flash-point not less than 23 °C	6.1	TF2	III	6.1 +3	61	LQ19	P001 IBC03 R001		MP15	T7	TP2 TP28
3348	PHENOXYACETIC ACID DERIVATIVE PESTICIDE, LIQUID, TOXIC	6.1	T6	I	6.1	61 648	LQ0	P001		MP8 MP17	T14	TP2 TP9 TP27
3348	PHENOXYACETIC ACID DERIVATIVE PESTICIDE, LIQUID, TOXIC	6.1	T6	II	6.1	61 648	LQ17	P001 IBC02		MP15	T11	TP2 TP27
3348	PHENOXYACETIC ACID DERIVATIVE PESTICIDE, LIQUID, TOXIC	6.1	T6	III	6.1	61 648	LQ19	P001 IBC03 LP01 R001		MP15	T7	TP2 TP28
3349	PYRETHROID PESTICIDE, SOLID, TOXIC	6.1	T7	I	6.1	61 648	LQ0	P002 IBC07		MP18	T6	TP33
3349	PYRETHROID PESTICIDE, SOLID, TOXIC	6.1	T7	II	6.1	61 648	LQ18	P002 IBC08	B4	MP10	T3	TP33
3349	PYRETHROID PESTICIDE, SOLID, TOXIC	6.1	T7	III	6.1	61 648	LQ9	P002 IBC08 LP02 R001	B3	MP10	T1	TP33
3350	PYRETHROID PESTICIDE, LIQUID, FLAMMABLE, TOXIC, flash-point less than 23 °C	3	FT2	I	3 +6.1	61	LQ3	P001		MP7 MP17	T14	TP2 TP9 TP27
3350	PYRETHROID PESTICIDE, LIQUID, FLAMMABLE, TOXIC, flash-point less than 23 °C	3	FT2	II	3 +6.1	61	LQ4	P001 IBC02 R001		MP19	T11	TP2 TP27
3351	PYRETHROID PESTICIDE, LIQUID, TOXIC, FLAMMABLE, flash-point not less than 23 °C	6.1	TF2	I	6.1 +3	61	LQ0	P001		MP8 MP17	T14	TP2 TP9 TP27
3351	PYRETHROID PESTICIDE, LIQUID, TOXIC, FLAMMABLE, flash-point not less than 23 °C	6.1	TF2	II	6.1 +3	61	LQ17	P001 IBC02		MP15	T11	TP2 TP27

ADR tank		Vehicle for tank carriage	Transport category	Special provisions for carriage				Hazard identifi-cation No.	UN No.	Name and description
Tank code	Special provisions			Packages	Bulk	Loading, unloading and handling	Operation			
4.3	4.3.5, 6.8.4	9.1.1.2	1.1.3.6	7.2.4	7.3.3	7.5.11	8.5	5.3.2.3		3.1.2
(12)	(13)	(14)	(15)	(16)	(17)	(18)	(19)	(20)	(1)	(2)
L10CH	TU14 TU15 TE21	FL	1			CV13 CV28	S2 S19	336	3346	PHENOXYACETIC ACID DERIVATIVE PESTICIDE, LIQUID, FLAMMABLE, TOXIC, flash-point less than 23 °C
L4BH	TU15 TE15	FL	2			CV13 CV28	S2 S19	336	3346	PHENOXYACETIC ACID DERIVATIVE PESTICIDE, LIQUID, FLAMMABLE, TOXIC, flash-point less than 23 °C
L10CH	TU14 TU15 TE19 TE21	FL	1			CV1 CV13 CV28	S2 S9 S17	663	3347	PHENOXYACETIC ACID DERIVATIVE PESTICIDE, LIQUID, TOXIC, FLAMMABLE, flash-point not less than 23 °C
L4BH	TU15 TE15 TE19	FL	2			CV13 CV28	S2 S9 S19	63	3347	PHENOXYACETIC ACID DERIVATIVE PESTICIDE, LIQUID, TOXIC, FLAMMABLE, flash-point not less than 23 °C
L4BH	TU15 TE15 TE19	FL	2			CV13 CV28	S2 S9	63	3347	PHENOXYACETIC ACID DERIVATIVE PESTICIDE, LIQUID, TOXIC, FLAMMABLE, flash-point not less than 23 °C
L10CH	TU14 TU15 TE19 TE21	AT	1			CV1 CV13 CV28	S9 S17	66	3348	PHENOXYACETIC ACID DERIVATIVE PESTICIDE, LIQUID, TOXIC
L4BH	TU15 TE15 TE19	AT	2			CV13 CV28	S9 S19	60	3348	PHENOXYACETIC ACID DERIVATIVE PESTICIDE, LIQUID, TOXIC
L4BH	TU15 TE15 TE19	AT	2			CV13 CV28	S9	60	3348	PHENOXYACETIC ACID DERIVATIVE PESTICIDE, LIQUID, TOXIC
S10AH L10CH	TU14 TU15 TE19 TE21	AT	1	V10 V12		CV1 CV13 CV28	S9 S17	66	3349	PYRETHROID PESTICIDE, SOLID, TOXIC
SGAH L4BH	TU15 TE15 TE19	AT	2	V11		CV13 CV28	S9 S19	60	3349	PYRETHROID PESTICIDE, SOLID, TOXIC
SGAH L4BH	TU15 TE15 TE19	AT	2		VV9b	CV13 CV28	S9	60	3349	PYRETHROID PESTICIDE, SOLID, TOXIC
L10CH	TU14 TU15 TE21	FL	1			CV13 CV28	S2 S19	336	3350	PYRETHROID PESTICIDE, LIQUID, FLAMMABLE, TOXIC, flash-point less than 23 °C
L4BH	TU15 TE15	FL	2			CV13 CV28	S2 S19	336	3350	PYRETHROID PESTICIDE, LIQUID, FLAMMABLE, TOXIC, flash-point less than 23 °C
L10CH	TU14 TU15 TE19 TE21	FL	1			CV1 CV13 CV28	S2 S9 S17	663	3351	PYRETHROID PESTICIDE, LIQUID, TOXIC, FLAMMABLE, flash-point not less than 23 °C
L4BH	TU15 TE15 TE19	FL	2			CV13 CV28	S2 S9 S19	63	3351	PYRETHROID PESTICIDE, LIQUID, TOXIC, FLAMMABLE, flash-point not less than 23 °C

UN No.	Name and description	Class	Classification code	Packing group	Labels	Special provisions	Limited quantities	Packaging			Portable tanks and bulk containers	
								Packing instructions	Special packing provisions	Mixed packing provisions	Instructions	Special provisions
	3.1.2	2.2	2.2	2.1.1.3	5.2.2	3.3	3.4.6	4.1.4	4.1.4	4.1.10	4.2.5.2 7.3.2	4.2.5.3
(1)	(2)	(3a)	(3b)	(4)	(5)	(6)	(7)	(8)	(9a)	(9b)	(10)	(11)
3351	PYRETHROID PESTICIDE, LIQUID, TOXIC, FLAMMABLE, flash-point not less than 23 °C	6.1	TF2	III	6.1 +3	61	LQ19	P001 IBC03 R001		MP15	T7	TP2 TP28
3352	PYRETHROID PESTICIDE, LIQUID, TOXIC	6.1	T6	I	6.1	61 648	LQ0	P001		MP8 MP17	T14	TP2 TP9 TP27
3352	PYRETHROID PESTICIDE, LIQUID, TOXIC	6.1	T6	II	6.1	61 648	LQ17	P001 IBC02		MP15	T11	TP2 TP27
3352	PYRETHROID PESTICIDE, LIQUID, TOXIC	6.1	T6	III	6.1	61 648	LQ19	P001 IBC03 LP01 R001		MP15	T7	TP2 TP28
3354	INSECTICIDE GAS, FLAMMABLE, N.O.S.	2	2F		2.1	274	LQ0	P200		MP9	(M)	
3355	INSECTICIDE GAS, TOXIC, FLAMMABLE, N.O.S.	2	2TF		2.3 +2.1	274	LQ0	P200		MP9	(M)	
3356	OXYGEN GENERATOR, CHEMICAL	5.1	O3	II	5.1	284	LQ0	P500		MP2		
3357	NITROGLYCERIN MIXTURE, DESENSITIZED, LIQUID, N.O.S. with not more than 30% nitroglycerin, by mass	3	D	II	3	274 288	LQ4	P099		MP2		
3358	REFRIGERATING MACHINES containing flammable, non-toxic, liquefied gas	2	6F		2.1	291	LQ0	P003	PP32	MP9		
3359	FUMIGATED UNIT	9	M11			302						
3360	Fibres, vegetable, dry	4.1	F1	NOT SUBJECT TO ADR								
3361	CHLOROSILANES, TOXIC, CORROSIVE, N.O.S.	6.1	TC1	II	6.1 +8	274	LQ0	P001 IBC01		MP15	T11	TP2 TP27
3362	CHLOROSILANES, TOXIC, CORROSIVE, FLAMMABLE, N.O.S.	6.1	TFC	II	6.1 +3 +8	274	LQ0	P001 IBC01		MP15	T11	TP2 TP27
3363	Dangerous goods in machinery or dangerous goods in apparatus	9	M11	NOT SUBJECT TO ADR [see also 1.1.3.1.(b)]								
3364	TRINITROPHENOL (PICRIC ACID) wetted with not less than 10% water, by mass	4.1	D	I	4.1		LQ0	P406	PP24	MP2		
3365	TRINITROCHLORO-BENZENE (PICRYL CHLORIDE) wetted with not less than 10% water, by mass	4.1	D	I	4.1		LQ0	P406	PP24	MP2		
3366	TRINITROTOLUENE (TNT), wetted with not less than 10% water, by mass	4.1	D	I	4.1		LQ0	P406	PP24	MP2		
3367	TRINITROBENZENE, wetted with not less than 10% water, by mass	4.1	D	I	4.1		LQ0	P406	PP24	MP2		
3368	TRINITROBENZOIC ACID, wetted with not less than 10% water, by mass	4.1	D	I	4.1		LQ0	P406	PP24	MP2		
3369	SODIUM DINITRO-o-CRESOLATE, WETTED with not less than 10% water, by mass	4.1	DT	I	4.1 +6.1		LQ0	P406	PP24	MP2		

ADR tank		Vehicle for tank carriage	Transport category	Special provisions for carriage				Hazard identifi-cation No.	UN No.	Name and description
Tank code	Special provisions			Packages	Bulk	Loading, unloading and handling	Operation			
4.3	4.3.5, 6.8.4	9.1.1.2	1.1.3.6	7.2.4	7.3.3	7.5.11	8.5	5.3.2.3		3.1.2
(12)	(13)	(14)	(15)	(16)	(17)	(18)	(19)	(20)	(1)	(2)
L4BH	TU15 TE15 TE19	FL	2			CV13 CV28	S2 S9	63	3351	PYRETHROID PESTICIDE, LIQUID, TOXIC, FLAMMABLE, flash-point not less than 23 °C
L10CH	TU14 TU15 TE19 TE21	AT	1			CV1 CV13 CV28	S9 S17	66	3352	PYRETHROID PESTICIDE, LIQUID, TOXIC
L4BH	TU15 TE15 TE19	AT	2			CV13 CV28	S9 S19	60	3352	PYRETHROID PESTICIDE, LIQUID, TOXIC
L4BH	TU15 TE15 TE19	AT	2			CV13 CV28	S9	60	3352	PYRETHROID PESTICIDE, LIQUID, TOXIC
PxBN(M)		FL	2			CV9 CV10 CV36	S2 S20	23	3354	INSECTICIDE GAS, FLAMMABLE, N.O.S.
PxBH(M)	TU6	FL	1			CV9 CV10 CV36	S2 S7 S17	263	3355	INSECTICIDE GAS, TOXIC, FLAMMABLE, N.O.S.
			2			CV24			3356	OXYGEN GENERATOR, CHEMICAL
			2				S2 S17		3357	NITROGLYCERIN MIXTURE, DESENSITIZED, LIQUID, N.O.S. with not more than 30% nitroglycerin, by mass
			2			CV9	S2		3358	REFRIGERATING MACHINES containing flammable, non-toxic, liquefied gas
									3359	FUMIGATED UNIT
NOT SUBJECT TO ADR									3360	Fibres, vegetable, dry
L4BH	TU15 TE15	AT	2			CV13 CV28	S9 S19	68	3361	CHLOROSILANES, TOXIC, CORROSIVE, N.O.S.
L4BH	TU15 TE15	FL	2			CV13 CV28	S2 S9 S19	638	3362	CHLOROSILANES, TOXIC, CORROSIVE, FLAMMABLE, N.O.S.
NOT SUBJECT TO ADR [see also 1.1.3.1.(b)]									3363	Dangerous goods in machinery or dangerous goods in apparatus
			1				S17		3364	TRINITROPHENOL (PICRIC ACID) wetted with not less than 10% water, by mass
			1				S17		3365	TRINITROCHLORO-BENZENE (PICRYL CHLORIDE) wetted with not less than 10% water, by mass
			1				S17		3366	TRINITROTOLUENE (TNT), wetted with not less than 10% water, by mass
			1				S17		3367	TRINITROBENZENE, wetted with not less than 10% water, by mass
			1				S17		3368	TRINITROBENZOIC ACID, wetted with not less than 10% water, by mass
			1			CV13 CV28	S17		3369	SODIUM DINITRO-o-CRESOLATE, WETTED with not less than 10% water, by mass

UN No.	Name and description	Class	Classification code	Packing group	Labels	Special provisions	Limited quantities	Packaging			Portable tanks and bulk containers	
								Packing instructions	Special packing provisions	Mixed packing provisions	Instructions	Special provisions
	3.1.2	2.2	2.2	2.1.1.3	5.2.2	3.3	3.4.6	4.1.4	4.1.4	4.1.10	4.2.5.2 7.3.2	4.2.5.3
(1)	(2)	(3a)	(3b)	(4)	(5)	(6)	(7)	(8)	(9a)	(9b)	(10)	(11)
3370	UREA NITRATE, wetted with not less than 10% water, by mass	4.1	D	I	4.1		LQ0	P406	PP78	MP2		
3371	2 –METHYLBUTANAL	3	F1	II	3		LQ4	P001 IBC02 R001		MP19	T4	TP1
3373	DIAGNOSTIC SPECIMENS or CLINICAL SPECIMENS	6.2	I4			319	LQ0	P650				
3374	ACETYLENE, SOLVENT FREE	2	2F		2.1		LQ0	P200		MP9		
3375	AMMONIUM NITRATE EMULSION or SUSPENSION or GEL, intermediate for blasting explosives, liquid	5.1	O1	II	5.1	309	LQ0	P099 IBC99		MP2	T1	TP1 TP9 TP17 TP32
3375	AMMONIUM NITRATE EMULSION or SUSPENSION or GEL, intermediate for blasting explosives, solid	5.1	O2	II	5.1	309	LQ0	P099 IBC99		MP2	T1	TP1 TP9 TP17 TP32
3376	4-NITROPHENYL-HYDRAZINE, with not less than 30% water, by mass	4.1	D	I	4.1		LQ0	P406	PP26	MP2		
3377	SODIUM PERBORATE MONOHYDRATE	5.1	O2	III	5.1		LQ12	P002 IBC08 LP02 R001	B3	MP10	T1 BK1 BK2	TP33
3378	SODIUM CARBONATE PEROXYHYDRATE	5.1	O2	II	5.1		LQ11	P002 IBC08	B4	MP10	T3 BK1 BK2	TP33
3378	SODIUM CARBONATE PEROXYHYDRATE	5.1	O2	III	5.1		LQ12	P002 IBC08 LP02 R001	B3	MP10	T1 BK1 BK2	TP33
3379	DESENSITIZED EXPLOSIVE, LIQUID, N.O.S.	3	D	I	3	274 311	LQ0	P099		MP2		
3380	DESENSITIZED EXPLOSIVE, SOLID, N.O.S.	4.1	D	I	4.1	274 311	LQ0	P099		MP2		
3381	TOXIC BY INHALATION LIQUID, N.O.S. with an inhalation toxicity lower than or equal to 200 ml/m^3 and saturated vapour concentration greater than or equal to 500 LC_{50}	6.1	T1 or T4	I	6.1	274	LQ0	P601		MP8 MP17	T22	TP2 TP9
3382	TOXIC BY INHALATION LIQUID, N.O.S. with an inhalation toxicity toxicity lower than or equal to 1000 ml/m^3 and saturated vapour concentration greater than or equal to 10 LC_{50}	6.1	T1 or T4	I	6.1	274	LQ0	P602		MP8 MP17	T20	TP2 TP9

ADR tank		Vehicle for tank carriage	Transport category	Special provisions for carriage				Hazard identifi-cation No.	UN No.	Name and description
Tank code	Special provisions			Packages	Bulk	Loading, unloading and handling	Operation			
4.3	4.3.5, 6.8.4	9.1.1.2	1.1.3.6	7.2.4	7.3.3	7.5.11	8.5	5.3.2.3		3.1.2
(12)	(13)	(14)	(15)	(16)	(17)	(18)	(19)	(20)	(1)	(2)
			1				S17		3370	UREA NITRATE, wetted with not less than 10% water, by mass
LGBF		FL	2				S2 S20	33	3371	2 –METHYLBUTANAL
L4BH	TU15 TU37 TE15 TE19	AT					S3	606	3373	DIAGNOSTIC SPECIMENS or CLINICAL SPECIMENS
			2			CV9 CV10 CV36	S2		3374	ACETYLENE, SOLVENT FREE
LGAV(+)	TU3 TU12 TU26 TU39 TE10 TE23 TA1 TA3	AT	2			CV24	S9 S14	50	3375	AMMONIUM NITRATE EMULSION or SUSPENSION or GEL, intermediate for blasting explosives, liquid
SGAV(+)	TU3 TU12 TU26 TU39 TE10 TE23 TA1 TA3	AT	2			CV24	S9 S14	50	3375	AMMONIUM NITRATE EMULSION or SUSPENSION or GEL, intermediate for blasting explosives, solid
			1	V1			S17		3376	4-NITROPHENYL-HYDRAZINE, with not less than 30% water, by mass
SGAV	TU3	AT	3		VV8	CV24		50	3377	SODIUM PERBORATE MONOHYDRATE
SGAV	TU3	AT	2	V11	VV8	CV24		50	3378	SODIUM CARBONATE PEROXYHYDRATE
SGAV	TU3	AT	3		VV8	CV24		50	3378	SODIUM CARBONATE PEROXYHYDRATE
			1				S2 S20		3379	DESENSITIZED EXPLOSIVE, LIQUID, N.O.S.
			1				S17		3379	DESENSITIZED EXPLOSIVE, SOLID, N.O.S.
L10CH	TU14 TU15 TE19 TE21	AT	1			CV1 CV13 CV28	S9 S17	66	3381	TOXIC BY INHALATION LIQUID, N.O.S. with an inhalation toxicity lower than or equal to 200 ml/m^3 and saturated vapour concentration greater than or equal to 500 LC_{50}
L10CH	TU14 TU15 TE19 TE21	AT	1			CV1 CV13 CV28	S9 S17	66	3382	TOXIC BY INHALATION LIQUID, N.O.S. with an inhalation toxicity toxicity lower than or equal to 1000 ml/m^3 and saturated vapour concentration greater than or equal to 10 LC_{50}

UN No.	Name and description	Class	Classification code	Packing group	Labels	Special provisions	Limited quantities	Packaging			Portable tanks and bulk containers	
								Packing instructions	Special packing provisions	Mixed packing provisions	Instructions	Special provisions
	3.1.2	2.2	2.2	2.1.1.3	5.2.2	3.3	3.4.6	4.1.4	4.1.4	4.1.10	4.2.5.2 7.3.2	4.2.5.3
(1)	(2)	(3a)	(3b)	(4)	(5)	(6)	(7)	(8)	(9a)	(9b)	(10)	(11)
3383	TOXIC BY INHALATION LIQUID, FLAMMABLE, N.O.S. with an inhalation toxicity lower than or equal to 200 ml/m^3 and saturated vapour concentration greater than or equal to 500 LC_{50}	6.1	TF1	I	6.1 + 3	274	LQ0	P601		MP8 MP17	T22	TP2 TP9
3384	TOXIC BY INHALATION LIQUID, FLAMMABLE, N.O.S. with an inhalation toxicity lower than or equal to 1000 ml/m^3 and saturated vapour concentration greater than or equal to 10 LC_{50}	6.1	TF1	I	6.1 + 3	274	LQ0	P602		MP8 MP17	T20	TP2 TP9
3385	TOXIC BY INHALATION LIQUID, WATER-REACTIVE, N.O.S. with an inhalation toxicity lower than or equal to 200 ml/m^3 and saturated vapour concentration greater than or equal to 500 LC_{50}	6.1	TW1	I	6.1 + 4.3	274	LQ0	P601		MP8 MP17	T22	TP2 TP9
3386	TOXIC BY INHALATION LIQUID, WATER-REACTIVE, N.O.S. with an inhalation toxicity lower than or equal to 1000 ml/m^3 and saturated vapour concentration greater than or equal to 10 LC_{50}	6.1	TW1	I	6.1 + 4.3	274	LQ0	P602		MP8 MP17	T20	TP2 TP9
3387	TOXIC BY INHALATION LIQUID, OXIDIZING, N.O.S. with an inhalation toxicity lower than or equal to 200 ml/m^3 and saturated vapour concentration greater than or equal to 500 LC_{50}	6.1	TO1	I	6.1 + 5.1	274	LQ0	P601		MP8 MP17	T22	TP2 TP9
3388	TOXIC BY INHALATION LIQUID, OXIDIZING, N.O.S. with an inhalation toxicity lower than or equal to 1000 ml/m^3 and saturated vapour concentration greater than or equal to 10 LC_{50}	6.1	TO1	I	6.1 + 5.1	274	LQ0	P602		MP8 MP17	T20	TP2 TP9
3389	TOXIC BY INHALATION LIQUID, CORROSIVE, N.O.S. with an inhalation toxicity lower than or equal to 200 ml/m^3 and saturated vapour concentration greater than or equal to 500 LC_{50}	6.1	TC1 or TC3	I	6.1 + 8	274	LQ0	P601		MP8 MP17	T22	TP2 TP9

ADR tank		Vehicle for tank carriage	Transport category	Special provisions for carriage				Hazard identification No.	UN No.	Name and description
Tank code	Special provisions			Packages	Bulk	Loading, unloading and handling	Operation			
4.3	4.3.5, 6.8.4	9.1.1.2	1.1.3.6	7.2.4	7.3.3	7.5.11	8.5	5.3.2.3		3.1.2
(12)	(13)	(14)	(15)	(16)	(17)	(18)	(19)	(20)	(1)	(2)
L10CH	TU14 TU15 TE19 TE21	FL	1			CV1 CV13 CV28	S2 S9 S17	663	3383	TOXIC BY INHALATION LIQUID, FLAMMABLE, N.O.S. with an inhalation toxicity lower than or equal to 200 ml/m^3 and saturated vapour concentration greater than or equal to 500 LC_{50}
L10CH	TU14 TU15 TE19 TE21	FL	1			CV1 CV13 CV28	S2 S9 S17	663	3384	TOXIC BY INHALATION LIQUID, FLAMMABLE, N.O.S. with an inhalation toxicity lower than or equal to 1000 ml/m^3 and saturated vapour concentration greater than or equal to 10 LC_{50}
L10CH	TU14 TU15 TE19 TE21	AT	1			CV1 CV13 CV28	S9 S17	623	3385	TOXIC BY INHALATION LIQUID, WATER-REACTIVE, N.O.S. with an inhalation toxicity lower than or equal to 200 ml/m^3 and saturated vapour concentration greater than or equal to 500 LC_{50}
L10CH	TU14 TU15 TE19 TE21	AT	1			CV1 CV13 CV28	S9 S17	623	3386	TOXIC BY INHALATION LIQUID, WATER-REACTIVE, N.O.S. with an inhalation toxicity lower than or equal to 1000 ml/m^3 and saturated vapour concentration greater than or equal to 10 LC_{50}
L10CH	TU14 TU15 TE19 TE21	AT	1			CV1 CV13 CV28	S9 S17	665	3387	TOXIC BY INHALATION LIQUID, OXIDIZING, N.O.S. with an inhalation toxicity lower than or equal to 200 ml/m^3 and saturated vapour concentration greater than or equal to 500 LC_{50}
L10CH	TU14 TU15 TE19 TE21	AT	1			CV1 CV13 CV28	S9 S17	665	3388	TOXIC BY INHALATION LIQUID, OXIDIZING, N.O.S. with an inhalation toxicity lower than or equal to 1000 ml/m^3 and saturated vapour concentration greater than or equal to 10 LC_{50}
L10CH	TU14 TU15 TE19 TE21	AT	1			CV1 CV13 CV28	S9 S17	668	3389	TOXIC BY INHALATION LIQUID, CORROSIVE, N.O.S. with an inhalation toxicity lower than or equal to 200 ml/m^3 and saturated vapour concentration greater than or equal to 500 LC_{50}

UN No.	Name and description	Class	Classification code	Packing group	Labels	Special provisions	Limited quantities	Packaging			Portable tanks and bulk containers	
								Packing instructions	Special packing provisions	Mixed packing provisions	Instructions	Special provisions
	3.1.2	2.2	2.2	2.1.1.3	5.2.2	3.3	3.4.6	4.1.4	4.1.4	4.1.10	4.2.5.2 7.3.2	4.2.5.3
(1)	(2)	(3a)	(3b)	(4)	(5)	(6)	(7)	(8)	(9a)	(9b)	(10)	(11)
3390	TOXIC BY INHALATION LIQUID, CORROSIVE, N.O.S. with an inhalation toxicity lower than or equal to 1000 ml/m^3 and saturated vapour concentration greater than or equal to 10 LC_{50}	6.1	TC1 or TC3	I	6.1 + 8	274	LQ0	P602		MP8 MP17	T20	TP2 TP9
3391	ORGANOMETALLIC SUBSTANCE, SOLID, PYROPHORIC	4.2	S5	I	4.2	274	LQ0	P404	PP86	MP2	T21	TP7 TP33
3392	ORGANOMETALLIC SUBSTANCE, LIQUID, PYROPHORIC	4.2	S5	I	4.2	274	LQ0	P400	PP86	MP2	T21	TP2 TP7
3393	ORGANOMETALLIC SUBSTANCE, SOLID, PYROPHORIC, WATER-REACTIVE	4.2	SW	I	4.2 + 4.3	274	LQ0	P404	PP86	MP2	T21	TP7 TP33
3394	ORGANOMETALLIC SUBSTANCE, LIQUID, PYROPHORIC, WATER-REACTIVE	4.2	SW	I	4.2 + 4.3	274	LQ0	P400	PP86	MP2	T21	TP2 TP7
3395	ORGANOMETALLIC SUBSTANCE, SOLID, WATER-REACTIVE	4.3	W2	I	4.3	274	LQ0	P403		MP2	T9	TP7 TP33
3395	ORGANOMETALLIC SUBSTANCE, SOLID, WATER-REACTIVE	4.3	W2	II	4.3	274	LQ11	P410 IBC04		MP14	T3	TP33
3395	ORGANOMETALLIC SUBSTANCE, SOLID, WATER-REACTIVE	4.3	W2	III	4.3	274	LQ12	P410 IBC06		MP14	T1	TP33
3396	ORGANOMETALLIC SUBSTANCE, SOLID, WATER-REACTIVE, FLAMMABLE	4.3	WF2	I	4.3 + 4.1	274	LQ0	P403		MP2	T9	TP7 TP33
3396	ORGANOMETALLIC SUBSTANCE, SOLID, WATER-REACTIVE, FLAMMABLE	4.3	WF2	II	4.3 + 4.1	274	LQ11	P410 IBC04		MP14	T3	TP33
3396	ORGANOMETALLIC SUBSTANCE, SOLID, WATER-REACTIVE, FLAMMABLE	4.3	WF2	III	4.3 + 4.1	274	LQ12	P410 IBC06		MP14	T1	TP33
3397	ORGANOMETALLIC SUBSTANCE, SOLID, WATER-REACTIVE, SELF-HEATING	4.3	WS	I	4.3 + 4.2	274	LQ0	P403		MP2	T9	TP7 TP33
3397	ORGANOMETALLIC SUBSTANCE, SOLID, WATER-REACTIVE, SELF-HEATING	4.3	WS	II	4.3 + 4.2	274	LQ11	P410 IBC04		MP14	T3	TP33
3397	ORGANOMETALLIC SUBSTANCE, SOLID, WATER-REACTIVE, SELF-HEATING	4.3	WS	III	4.3 + 4.2	274	LQ12	P410 IBC06		MP14	T1	TP33
3398	ORGANOMETALLIC SUBSTANCE, LIQUID, WATER-REACTIVE	4.3	W1	I	4.3	274	LQ0	P402		MP2	T13	TP2 TP7
3398	ORGANOMETALLIC SUBSTANCE, LIQUID, WATER-REACTIVE	4.3	W1	II	4.3	274	LQ10	P001 IBC01		MP15	T7	TP2 TP7
3398	ORGANOMETALLIC SUBSTANCE, LIQUID, WATER-REACTIVE	4.3	W1	III	4.3	274	LQ13	P001 IBC02		MP15	T7	TP2 TP7

ADR tank		Vehicle for tank carriage	Transport category	Special provisions for carriage				Hazard identification No.	UN No.	Name and description
Tank code	Special provisions			Packages	Bulk	Loading, unloading and handling	Operation			
4.3	4.3.5, 6.8.4	9.1.1.2	1.1.3.6	7.2.4	7.3.3	7.5.11	8.5	5.3.2.3		3.1.2
(12)	(13)	(14)	(15)	(16)	(17)	(18)	(19)	(20)	(1)	(2)
L10CH	TU14 TU15 TE19 TE21	AT	1			CV1 CV13 CV28	S9 S17	668	3390	TOXIC BY INHALATION LIQUID, CORROSIVE, N.O.S. with an inhalation toxicity lower than or equal to 1000 ml/m^3 and saturated vapour concentration greater than or equal to 10 LC_{50}
L21DH	TU4 TU14 TU22 TC1 TE21 TM1	AT	0	V1			S20	333	3391	ORGANOMETALLIC SUBSTANCE, SOLID, PYROPHORIC
L21DH	TU4 TU14 TU22 TC1 TE21 TM1	AT	0	V1			S20	333	3392	ORGANOMETALLIC SUBSTANCE, LIQUID, PYROPHORIC
L21DH	TU4 TU14 TU22 TC1 TE21 TM1	AT	0	V1			S20	X333	3393	ORGANOMETALLIC SUBSTANCE, SOLID, PYROPHORIC, WATER-REACTIVE
L21DH	TU4 TU14 TU22 TC1 TE21 TM1	AT	0	V1			S20	X333	3394	ORGANOMETALLIC SUBSTANCE, LIQUID, PYROPHORIC, WATER-REACTIVE
S10AN L10DH	TU4 TU14 TU22 TE21 TM2	AT	1	V1		CV23	S20	X423	3395	ORGANOMETALLIC SUBSTANCE, SOLID, WATER-REACTIVE
SGAN L4DH	TU14 TE21 TM2	AT	2	V1		CV23		423	3395	ORGANOMETALLIC SUBSTANCE, SOLID, WATER-REACTIVE
SGAN L4DH	TU14 TE21 TM2	AT	3	V1		CV23		423	3395	ORGANOMETALLIC SUBSTANCE, SOLID, WATER-REACTIVE
S10AN L10DH	TU4 TU14 TU22 TE21 TM2	AT	0	V1		CV23		X423	3396	ORGANOMETALLIC SUBSTANCE, SOLID, WATER-REACTIVE, FLAMMABLE
SGAN L4DH	TU14 TE21 TM2	AT	0	V1		CV23		423	3396	ORGANOMETALLIC SUBSTANCE, SOLID, WATER-REACTIVE, FLAMMABLE
SGAN L4DH	TU14 TE21 TM2	AT	0	V1		CV23		423	3396	ORGANOMETALLIC SUBSTANCE, SOLID, WATER-REACTIVE, FLAMMABLE
S10AN L10DH	TU14 TE21 TM2	AT	1	V1		CV23	S20	X423	3397	ORGANOMETALLIC SUBSTANCE, SOLID, WATER-REACTIVE, SELF-HEATING
SGAN L4DH		AT	2	V1		CV23		423	3397	ORGANOMETALLIC SUBSTANCE, SOLID, WATER-REACTIVE, SELF-HEATING
SGAN L4DH		AT	3	V1		CV23		423	3397	ORGANOMETALLIC SUBSTANCE, SOLID, WATER-REACTIVE, SELF-HEATING
L10DH	TU4 TU14 TU22 TE21 TM2	AT	0	V1		CV23	S20	X323	3398	ORGANOMETALLIC SUBSTANCE, LIQUID, WATER-REACTIVE
L4DH	TU14 TE21 TM2	AT	0	V1		CV23		323	3398	ORGANOMETALLIC SUBSTANCE, LIQUID, WATER-REACTIVE
L4DH	TU14 TE21 TM2	AT	0	V1		CV23		323	3398	ORGANOMETALLIC SUBSTANCE, LIQUID, WATER-REACTIVE

UN No.	Name and description	Class	Classification code	Packing group	Labels	Special provisions	Limited quantities	Packaging			Portable tanks and bulk containers	
								Packing instructions	Special packing provisions	Mixed packing provisions	Instructions	Special provisions
	3.1.2	2.2	2.2	2.1.1.3	5.2.2	3.3	3.4.6	4.1.4	4.1.4	4.1.10	4.2.5.2 7.3.2	4.2.5.3
(1)	(2)	(3a)	(3b)	(4)	(5)	(6)	(7)	(8)	(9a)	(9b)	(10)	(11)
3399	ORGANOMETALLIC SUBSTANCE, LIQUID, WATER-REACTIVE, FLAMMABLE	4.3	WF1	I	4.3+3	274	LQ0	P402		MP2	T13	TP2 TP7
3399	ORGANOMETALLIC SUBSTANCE, LIQUID, WATER-REACTIVE, FLAMMABLE	4.3	WF1	II	4.3+3	274	LQ10	P001 IBC01		MP15	T7	TP2 TP7
3399	ORGANOMETALLIC SUBSTANCE, LIQUID, WATER-REACTIVE, FLAMMABLE	4.3	WF1	III	4.3+3	274	LQ13	P001 IBC02 R001		MP15	T7	TP2 TP7
3400	ORGANOMETALLIC SUBSTANCE, SOLID, SELF-HEATING	4.2	S5	II	4.2	274	LQ18	P410 IBC06		MP14	T3	TP33
3400	ORGANOMETALLIC SUBSTANCE, SOLID, SELF-HEATING	4.2	S5	III	4.2	274	LQ11	P002 IBC08		MP14	T1	TP33
3401	ALKALI METAL AMALGAM, SOLID	4.3	W2	I	4.3	182	LQ0	P403		MP2	T9	TP7 TP33
3402	ALKALINE EARTH METAL AMALGAM, SOLID	4.3	W2	I	4.3	183 506	LQ0	P403		MP2	T9	TP7 TP33
3403	POTASSIUM METAL ALLOYS, SOLID	4.3	W2	I	4.3		LQ0	P403		MP2	T9	TP7 TP33
3404	POTASSIUM SODIUM ALLOYS, SOLID	4.3	W2	I	4.3		LQ0	P403		MP2	T9	TP7 TP33
3405	BARIUM CHLORATE SOLUTION	5.1	OT1	II	5.1+6.1		LQ10	P504 IBC02		MP2	T4	TP1
3405	BARIUM CHLORATE SOLUTION	5.1	OT1	III	5.1+6.1		LQ13	P001 IBC02		MP2	T4	TP1
3406	BARIUM PERCHLORATE SOLUTION	5.1	OT1	II	5.1+6.1		LQ10	P504 IBC02		MP2	T4	TP1
3406	BARIUM PERCHLORATE SOLUTION	5.1	OT1	III	5.1+6.1		LQ13	P001 IBC02		MP2	T4	TP1
3407	CHLORATE AND MAGNESIUM CHLORIDE MIXTURE SOLUTION	5.1	O1	II	5.1		LQ10	P504 IBC02		MP2	T4	TP1
3407	CHLORATE AND MAGNESIUM CHLORIDE MIXTURE SOLUTION	5.1	O1	III	5.1		LQ13	P504 IBC02		MP2	T4	TP1
3408	LEAD PERCHLORATE SOLUTION	5.1	OT1	II	5.1+6.1		LQ10	P504 IBC02		MP2	T4	TP1
3408	LEAD PERCHLORATE SOLUTION	5.1	OT1	III	5.1+6.1		LQ13	P001 IBC02		MP2	T4	TP1
3409	CHLORONITROBENZENES, LIQUID	6.1	T1	II	6.1	279	LQ17	P001 IBC02		MP15	T7	TP2
3410	4-CHLORO-o-TOLUIDINE HYDROCHLORIDE SOLUTION	6.1	T1	III	6.1		LQ19	P001 IBC03 R001		MP15	T4	TP1
3411	beta-NAPHTHYLAMINE SOLUTION	6.1	T1	II	6.1		LQ17	P001 IBC02		MP15	T7	TP2
3411	beta-NAPHTHYLAMINE SOLUTION	6.1	T1	III	6.1		LQ19	P001 IBC02		MP15	T7	TP2
3413	POTASSIUM CYANIDE SOLUTION	6.1	T4	I	6.1		LQ0	P001		MP8 MP17	T14	TP2
3413	POTASSIUM CYANIDE SOLUTION	6.1	T4	II	6.1		LQ17	P001 IBC02		MP15	T11	TP2 TP27
3413	POTASSIUM CYANIDE SOLUTION	6.1	T4	III	6.1		LQ19	P001 IBC03 LP01 R001		MP15	T7	TP2 TP28
3414	SODIUM CYANIDE SOLUTION	6.1	T4	I	6.1		LQ0	P001		MP8 MP17	T14	TP2

ADR tank		Vehicle for tank carriage	Transport category	Special provisions for carriage				Hazard identifi-cation No.	UN No.	Name and description
Tank code	Special provisions			Packages	Bulk	Loading, unloading and handling	Operation			
4.3	4.3.5, 6.8.4	9.1.1.2	1.1.3.6	7.2.4	7.3.3	7.5.11	8.5	5.3.2.3		3.1.2
(12)	(13)	(14)	(15)	(16)	(17)	(18)	(19)	(20)	(1)	(2)
L10DH	TU4 TU14 TU22 TE21 TM2	FL	0	V1		CV23	S2 S20	X323	3399	ORGANOMETALLIC SUBSTANCE, LIQUID, WATER-REACTIVE, FLAMMABLE
L4DH	TU4 TU14 TU22 TE21 TM2	FL	0	V1		CV23	S2	323	3399	ORGANOMETALLIC SUBSTANCE, LIQUID, WATER-REACTIVE, FLAMMABLE
L4DH	TU14 TE21 TM2	FL	0	V1		CV23	S2	323	3399	ORGANOMETALLIC SUBSTANCE, LIQUID, WATER-REACTIVE, FLAMMABLE
SGAN L4BN		AT	2	V1 V12				40	3400	ORGANOMETALLIC SUBSTANCE, SOLID, SELF-HEATING
SGAN L4BN		AT	3	V1				40	3400	ORGANOMETALLIC SUBSTANCE, SOLID, SELF-HEATING
L10BN(+)	TU1 TE5 TT3 TM2	AT	1	V1		CV23	S20	X423	3401	ALKALI METAL AMALGAM, SOLID
L10BN(+)	TU1 TE5 TT3 TM2	AT	1	V1		CV23	S20	X423	3402	ALKALINE EARTH METAL AMALGAM, SOLID
L10BN(+)	TU1 TE5 TT3 TM2	AT	1	V1		CV23	S20	X423	3403	POTASSIUM METAL ALLOYS, SOLID
L10BN(+)	TU1 TE5 TT3 TM2	AT	1	V1		CV23	S20	X423	3404	POTASSIUM SODIUM ALLOYS, SOLID
L4BN	TU3	AT	2			CV24 CV28		56	3405	BARIUM CHLORATE SOLUTION
LGBV	TU3	AT	3			CV24 CV28		56	3405	BARIUM CHLORATE SOLUTION
L4BN	TU3	AT	2			CV24 CV28		56	3406	BARIUM PERCHLORATE SOLUTION
LGBV	TU3	AT	3			CV24 CV28		56	3406	BARIUM PERCHLORATE SOLUTION
L4BN	TU3	AT	2			CV24		50	3407	CHLORATE AND MAGNESIUM CHLORIDE MIXTURE SOLUTION
LGBV	TU3	AT	3			CV24		50	3407	CHLORATE AND MAGNESIUM CHLORIDE MIXTURE SOLUTION
L4BN	TU3	AT	2			CV24 CV28		56	3408	LEAD PERCHLORATE SOLUTION
LGBV	TU3	AT	3			CV24 CV28		56	3408	LEAD PERCHLORATE SOLUTION
L4BH	TU15 TE15 TE19	AT	2			CV13 CV28	S9 S19	60	3409	CHLORONITROBENZENES, LIQUID
L4BH	TU15 TE15 TE19	AT	2			CV13 CV28	S9	60	3410	4-CHLORO-o-TOLUIDINE HYDROCHLORIDE SOLUTION
L4BH	TU15 TE15 TE19	AT	2			CV13 CV28	S9 S19	60	3411	beta-NAPHTHYLAMINE SOLUTION
L4BH	TU15 TE15 TE19	AT	2			CV13 CV28	S9	60	3411	beta-NAPHTHYLAMINE SOLUTION
L10CH	TU14 TU15 TE19 TE21	AT	1			CV1 CV13 CV28	S9 S17	66	3413	POTASSIUM CYANIDE SOLUTION
L4BH	TU15 TE15 TE19	AT	2			CV13 CV28	S9 S19	60	3413	POTASSIUM CYANIDE SOLUTION
L4BH	TU15 TE15 TE19	AT	2			CV13 CV28	S9	60	3413	POTASSIUM CYANIDE SOLUTION
L10CH	TU14 TU15 TE19 TE21	AT	1			CV1 CV13 CV28	S9 S17	66	3414	SODIUM CYANIDE SOLUTION

UN No.	Name and description	Class	Classification code	Packing group	Labels	Special provisions	Limited quantities	Packaging			Portable tanks and bulk containers	
								Packing instructions	Special packing provisions	Mixed packing provisions	Instructions	Special provisions
	3.1.2	2.2	2.2	2.1.1.3	5.2.2	3.3	3.4.6	4.1.4	4.1.4	4.1.10	4.2.5.2 7.3.2	4.2.5.3
(1)	(2)	(3a)	(3b)	(4)	(5)	(6)	(7)	(8)	(9a)	(9b)	(10)	(11)
3414	SODIUM CYANIDE SOLUTION	6.1	T4	II	6.1		LQ17	P001 IBC02		MP15	T11	TP2 TP27
3414	SODIUM CYANIDE SOLUTION	6.1	T4	III	6.1		LQ19	P001 IBC03 LP01 R001		MP15	T7	TP2 TP28
3415	SODIUM FLUORIDE SOLUTION	6.1	T4	III	6.1		LQ19	P001 IBC03 LP01 R001		MP15	T4	TP1
3416	CHLOROACETO-PHENONE, LIQUID	6.1	T1	II	6.1		LQ17	P001 IBC02		MP15	T7	TP2
3417	XYLYL BROMIDE, SOLID	6.1	T2	II	6.1		LQ18	P002 IBC08	B4	MP10	T3	TP33
3418	2,4-TOLUYLENEDIAMINE SOLUTION	6.1	T1	III	6.1		LQ19	P001 IBC03 LP01 R001		MP15	T4	TP1
3419	BORON TRIFLUORIDE ACETIC ACID COMPLEX, SOLID	8	C4	II	8		LQ23	P002 IBC08	B4	MP10	T3	TP33
3420	BORON TRIFLUORIDE PROPIONIC ACID COMPLEX, SOLID	8	C4	II	8		LQ23	P002 IBC08	B4	MP10	T3	TP33
3421	POTASSIUM HYDROGENDIFLUORIDE SOLUTION	8	CT1	II	8+6.1		LQ22	P001 IBC02		MP15	T7	TP2
3421	POTASSIUM HYDROGENDIFLUORIDE SOLUTION	8	CT1	III	8+6.1		LQ19	P001 IBC03 R001		MP15	T4	TP1
3422	POTASSIUM FLUORIDE SOLUTION	6.1	T4	III	6.1		LQ19	P001 IBC03 LP01 R001		MP15	T4	TP1
3423	TETRAMETHYL-AMMONIUM HYDROXIDE, SOLID	8	C8	II	8		LQ24	P002 IBC08	B4	MP10	T3	TP33
3424	AMMONIUM DINITRO-o-CRESOLATE SOLUTION	6.1	T1	II	6.1		LQ17	P001 IBC02		MP15	T7	TP2
3424	AMMONIUM DINITRO-o-CRESOLATE SOLUTION	6.1	T1	III	6.1		LQ19	P001 IBC02		MP15	T7	TP2
3425	BROMOACETIC ACID, SOLID	8	C4	II	8		LQ23	P002 IBC08	B4	MP10	T3	TP33
3426	ACRYLAMIDE SOLUTION	6.1	T1	III	6.1		LQ19	P001 IBC03 LP01 R001		MP15	T4	TP1
3427	CHLOROBENZYL CHLORIDES, SOLID	6.1	T2	III	6.1		LQ9	P002 IBC08 LP02 R001	B3	MP10	T1	TP33
3428	3-CHLORO-4-METHYLPHENYL ISOCYANATE, SOLID	6.1	T2	II	6.1		LQ18	P002 IBC08	B4	MP10	T3	TP33
3429	CHLOROTOLUIDINES, LIQUID	6.1	T1	III	6.1		LQ19	P001 IBC03 LP01 R001		MP15	T4	TP1
3430	XYLENOLS, LIQUID	6.1	T1	II	6.1		LQ17	P001 IBC02		MP15	T7	TP2
3431	NITROBENZO-TRIFLUORIDES, SOLID	6.1	T2	II	6.1		LQ18	P002 IBC08	B4	MP10	T3	TP33
3432	POLYCHLORINATED BIPHENYLS, SOLID	9	M2	II	9	305	LQ25	P906 IBC08		MP10	T3	TP33

ADR tank		Vehicle for tank carriage	Transport category	Special provisions for carriage				Hazard identifi-cation No.	UN No.	Name and description
Tank code	Special provisions			Packages	Bulk	Loading, unloading and handling	Operation			
4.3	4.3.5, 6.8.4	9.1.1.2	1.1.3.6	7.2.4	7.3.3	7.5.11	8.5	5.3.2.3		3.1.2
(12)	(13)	(14)	(15)	(16)	(17)	(18)	(19)	(20)	(1)	(2)
L4BH	TU15 TE15 TE19	AT	2			CV13 CV28	S9 S19	60	3414	SODIUM CYANIDE SOLUTION
L4BH	TU15 TE15 TE19	AT	2			CV13 CV28	S9	60	3414	SODIUM CYANIDE SOLUTION
L4BH	TU15 TE15 TE19	AT	2			CV13 CV28	S9	60	3415	SODIUM FLUORIDE SOLUTION
L4BH	TU15 TE15 TE19	AT	2			CV13 CV28	S9 S19	60	3416	CHLOROACETO-PHENONE, LIQUID
SGAH L4BH	TU15 TE15 TE19	AT	2	V11		CV13 CV28	S9 S19	60	3417	XYLYL BROMIDE, SOLID
L4BH	TU15 TE15 TE19	AT	2			CV13 CV28	S9	60	3418	2,4-TOLUYLENEDIAMINE SOLUTION
SGAN L4BN		AT	2	V11				80	3419	BORON TRIFLUORIDE ACETIC ACID COMPLEX, SOLID
SGAN L4BN		AT	2	V11				80	3420	BORON TRIFLUORIDE PROPIONIC ACID COMPLEX, SOLID
L4DH	TU14 TE21	AT	2			CV13 CV28		86	3421	POTASSIUM HYDROGENDIFLUORIDE SOLUTION
L4DH	TU14 TE21	AT	3			CV13 CV28		86	3421	POTASSIUM HYDROGENDIFLUORIDE SOLUTION
L4BH	TU15 TE15 TE19	AT	2			CV13 CV28	S9	60	3422	POTASSIUM FLUORIDE SOLUTION
SGAN L4BN		AT	2	V11				80	3423	TETRAMETHYL-AMMONIUM HYDROXIDE, SOLID
L4BH	TU15 TE15 TE19	AT	2			CV13 CV28	S9 S19	60	3424	AMMONIUM DINITRO-o-CRESOLATE SOLUTION
L4BH	TU15 TE15 TE19	AT	2			CV13 CV28	S9	60	3424	AMMONIUM DINITRO-o-CRESOLATE SOLUTION
SGAN L4BN		AT	2	V11				80	3425	BROMOACETIC ACID, SOLID
L4BH	TU15 TE15 TE19	AT	2			CV13 CV28	S9	60	3426	ACRYLAMIDE SOLUTION
SGAH L4BH	TU15 TE15 TE19	AT	2		VV9b	CV13 CV28	S9	60	3427	CHLOROBENZYL CHLORIDES, SOLID
SGAH L4BH	TU15 TE15 TE19	AT	2	V11		CV13 CV28	S9 S19	60	3428	3-CHLORO-4-METHYLPHENYL ISOCYANATE, SOLID
L4BH	TU15 TE15 TE19	AT	2			CV13 CV28	S9	60	3429	CHLOROTOLUIDINES, LIQUID
L4BH	TU15 TE15 TE19	AT	2			CV13 CV28	S9 S19	60	3430	XYLENOLS, LIQUID
SGAH L4BH	TU15 TE15 TE19	AT	2	V11		CV13 CV28	S9 S19	60	3431	NITROBENZO-TRIFLUORIDES, SOLID
S4AH L4BH	TU15 TE15	AT	0		VV15	CV1 CV13 CV28	S19	90	3432	POLYCHLORINATED BIPHENYLS, SOLID

UN No.	Name and description	Class	Classification code	Packing group	Labels	Special provisions	Limited quantities	Packaging			Portable tanks and bulk containers	
								Packing instructions	Special packing provisions	Mixed packing provisions	Instructions	Special provisions
	3.1.2	2.2	2.2	2.1.1.3	5.2.2	3.3	3.4.6	4.1.4	4.1.4	4.1.10	4.2.5.2 7.3.2	4.2.5.3
(1)	(2)	(3a)	(3b)	(4)	(5)	(6)	(7)	(8)	(9a)	(9b)	(10)	(11)
3433	LITHIUM ALKYLS, SOLID	4.2	SW	I	4.2+4.3	320	LQ0	P400		MP2	T21	TP7 TP33
3434	NITROCRESOLS, LIQUID	6.1	T1	III	6.1		LQ19	P001 IBC03 LP01 R001		MP15	T4	TP1
3435	HYDROQUINONE SOLUTION	6.1	T1	III	6.1		LQ19	P001 IBC03 LP01 R001		MP15	T4	TP1
3436	HEXAFLUOROACETONE HYDRATE, SOLID	6.1	T2	II	6.1		LQ18	P002 IBC08	B4	MP10	T3	TP33
3437	CHLOROCRESOLS, SOLID	6.1	T2	II	6.1		LQ18	P002 IBC08	B4	MP10	T3	TP33
3438	alpha-METHYLBENZYL ALCOHOL, SOLID	6.1	T2	III	6.1		LQ9	P002 IBC08 LP02 R001	B3	MP10	T1	TP33
3439	NITRILES, TOXIC, SOLID, N.O.S.	6.1	T2	I	6.1	274	LQ0	P002 IBC07		MP18	T6	TP9 TP33
3439	NITRILES, TOXIC, SOLID, N.O.S.	6.1	T2	II	6.1	274	LQ18	P002 IBC08	B4	MP10	T3	TP33
3439	NITRILES, TOXIC, SOLID, N.O.S.	6.1	T2	III	6.1	274	LQ9	P002 IBC08 LP02 R001	B3	MP10	T1	TP33
3440	SELENIUM COMPOUND, LIQUID, N.O.S.	6.1	T4	I	6.1	563	LQ0	P001		MP8 MP17	T14	TP2 TP9 TP27
3440	SELENIUM COMPOUND, LIQUID, N.O.S.	6.1	T4	II	6.1	563	LQ17	P001 IBC02		MP15	T11	TP2 TP27
3440	SELENIUM COMPOUND, LIQUID, N.O.S.	6.1	T4	III	6.1	563	LQ19	P001 IBC03 R001		MP15	T7	TP1 TP28
3441	CHLORODINITRO-BENZENES, SOLID	6.1	T2	II	6.1	279	LQ18	P002 IBC08	B4	MP10	T3	TP33
3442	DICHLOROANILINES, SOLID	6.1	T2	II	6.1	279	LQ18	P002 IBC08	B4	MP10	T3	TP33
3443	DINITROBENZENES, SOLID	6.1	T2	II	6.1		LQ18	P002 IBC08	B4	MP10	T3	TP33
3444	NICOTINE HYDROCHLORIDE, SOLID	6.1	T2	II	6.1	43	LQ18	P001 IBC02	B4	MP10	T3	TP33
3445	NICOTINE SULPHATE, SOLID	6.1	T2	II	6.1		LQ18	P002 IBC08	B4	MP10	T3	TP33
3446	NITROTOLUENES, SOLID	6.1	T2	II	6.1		LQ18	P002 IBC08	B4	MP10	T3	TP33
3447	NITROXYLENES, SOLID	6.1	T2	II	6.1		LQ18	P002 IBC08	B4	MP10	T3	TP33
3448	TEAR GAS SUBSTANCE, SOLID, N.O.S.	6.1	T2	I	6.1	274	LQ0	P002		MP18	T6	TP9 TP33
3448	TEAR GAS SUBSTANCE, SOLID, N.O.S.	6.1	T2	II	6.1	274	LQ18	P002 IBC08	B4	MP10	T3	TP33
3449	BROMOBENZYL CYANIDES, SOLID	6.1	T2	I	6.1	138	LQ0	P002		MP18	T6	TP33
3450	DIPHENYLCHLORO-ARSINE, SOLID	6.1	T3	I	6.1		LQ0	P002 IBC07		MP18	T6	TP33
3451	TOLUIDINES, SOLID	6.1	T2	II	6.1	279	LQ18	P002 IBC08	B4	MP10	T3	TP33
3452	XYLIDINES, SOLID	6.1	T2	II	6.1		LQ18	P002 IBC08	B4	MP10	T3	TP33

ADR tank		Vehicle for tank carriage	Transport category	Special provisions for carriage				Hazard identifi-cation No.	UN No.	Name and description
Tank code	Special provisions			Packages	Bulk	Loading, unloading and handling	Operation			
4.3	4.3.5, 6.8.4	9.1.1.2	1.1.3.6	7.2.4	7.3.3	7.5.11	8.5	5.3.2.3		3.1.2
(12)	(13)	(14)	(15)	(16)	(17)	(18)	(19)	(20)	(1)	(2)
L21DH	TU4 TU14 TU22 TC1 TE21 TM1	AT	0	V1			S20	X333	3433	LITHIUM ALKYLS, SOLID
L4BH	TU15 TE15 TE19	AT	2			CV13 CV28	S9	60	3434	NITROCRESOLS, LIQUID
L4BH	TU15 TE15 TE19	AT	2			CV13 CV28	S9	60	3435	HYDROQUINONE SOLUTION
SGAH L4BH	TU15 TE15 TE19	AT	2	V11		CV13 CV28	S9 S19	60	3436	HEXAFLUOROACETONE HYDRATE, SOLID
SGAH L4BH	TU15 TE15 TE19	AT	2	V11		CV13 CV28	S9 S19	60	3437	CHLOROCRESOLS, SOLID
SGAH L4BH	TU15 TE15 TE19	AT	2		VV9b	CV13 CV28	S9	60	3438	alpha-METHYLBENZYL ALCOHOL, SOLID
S10AH L10CH	TU14 TU15 TE19 TE21	AT	1	V10 V12		CV1 CV13 CV28	S9 S17	66	3439	NITRILES, TOXIC, SOLID, N.O.S.
SGAH L4BH	TU15 TE15 TE19	AT	2	V11		CV13 CV28	S9 S19	60	3439	NITRILES, TOXIC, SOLID, N.O.S.
SGAH L4BH	TU15 TE15 TE19	AT	2		VV9b	CV13 CV28	S9	60	3439	NITRILES, TOXIC, SOLID, N.O.S.
L10CH	TU14 TU15 TE19 TE21	AT	1			CV1 CV13 CV28	S9 S17	66	3440	SELENIUM COMPOUND, LIQUID, N.O.S.
L4BH	TU15 TE15 TE19	AT	2			CV13 CV28	S9 S19	60	3440	SELENIUM COMPOUND, LIQUID, N.O.S.
L4BH	TU15 TE15 TE19	AT	2			CV13 CV28	S9	60	3440	SELENIUM COMPOUND, LIQUID, N.O.S.
SGAH L4BH	TU15 TE15 TE19	AT	2	V11		CV13 CV28	S9 S19	60	3441	CHLORODINITRO-BENZENES, SOLID
SGAH L4BH	TU15 TE15 TE19	AT	2	V11		CV13 CV28	S9 S19	60	3442	DICHLOROANILINES, SOLID
SGAH L4BH	TU15 TE15 TE19	AT	2	V11		CV13 CV28	S9 S19	60	3443	DINITROBENZENES, SOLID
SGAH	TU15 TE15 TE19	AT	2			CV13 CV28	S9 S19	60	3444	NICOTINE HYDROCHLORIDE, SOLID
SGAH	TU15 TE15 TE19	AT	2	V11		CV13 CV28	S9 S19	60	3445	NICOTINE SULPHATE, SOLID
SGAH L4BH	TU15 TE15 TE19	AT	2	V11		CV13 CV28	S9 S19	60	3446	NITROTOLUENES, SOLID
SGAH L4BH	TU15 TE15 TE19	AT	2	V11		CV13 CV28	S9 S19	60	3447	NITROXYLENES, SOLID
S10AH L10CH	TU14 TU15 TE19 TE21	AT	1			CV1 CV13 CV28	S9 S17	66	3448	TEAR GAS SUBSTANCE, SOLID, N.O.S.
SGAH L4BH	TU15 TE15 TE19	AT	2	V11		CV13 CV28	S9 S19	60	3448	TEAR GAS SUBSTANCE, SOLID, N.O.S.
S10AH L10CH	TU15 TE19	AT	1			CV1 CV13 CV28	S9 S17	66	3449	BROMOBENZYL CYANIDES, SOLID
S10AH L10CH	TU15 TE19	AT	1	V10 V12		CV1 CV13 CV28	S9 S17	66	3450	DIPHENYLCHLORO-ARSINE, SOLID
SGAH L4BH	TU15 TE15 TE19	AT	2	V11		CV13 CV28	S9 S19	60	3451	TOLUIDINES, SOLID
SGAH L4BH	TU15 TE15 TE19	AT	2	V11		CV13 CV28	S9 S19	60	3452	XYLIDINES, SOLID

UN No.	Name and description	Class	Classification code	Packing group	Labels	Special provisions	Limited quantities	Packaging			Portable tanks and bulk containers	
								Packing instructions	Special packing provisions	Mixed packing provisions	Instructions	Special provisions
	3.1.2	2.2	2.2	2.1.1.3	5.2.2	3.3	3.4.6	4.1.4	4.1.4	4.1.10	4.2.5.2 7.3.2	4.2.5.3
(1)	(2)	(3a)	(3b)	(4)	(5)	(6)	(7)	(8)	(9a)	(9b)	(10)	(11)
3453	PHOSPHORIC ACID, SOLID	8	C2	III	8		LQ24	P002 IBC08 LP02 R001	B3	MP10	T1	TP33
3454	DINITROTOLUENES, SOLID	6.1	T2	II	6.1		LQ18	P002 IBC08	B4	MP10	T3	TP33
3455	CRESOLS, SOLID	6.1	TC2	II	6.1 +8		LQ18	P002 IBC08	B4	MP10	T3	TP33
3456	NITROSYLSULPHURIC ACID, SOLID	8	C2	II	8		LQ23	P002 IBC08	B4	MP10	T3	TP33
3457	CHLORONITROTOLUENES, SOLID	6.1	T2	III	6.1		LQ9	P002 IBC08 LP02 R001	B3	MP10	T1	TP33
3458	NITROANISOLES, SOLID	6.1	T2	III	6.1	279	LQ9	P002 IBC08 LP02 R001	B3	MP10	T1	TP33
3459	NITROBROMOBENZENES, SOLID	6.1	T2	III	6.1		LQ9	P002 IBC08 LP02 R001	B3	MP10	T1	TP33
3460	N-ETHYLBENZYL-TOLUIDINES, SOLID	6.1	T2	III	6.1		LQ9	P002 IBC08 LP02 R001	B3	MP10	T1	TP33
3461	ALUMINIUM ALKYL HALIDES, SOLID	4.2	SW	I	4.2 +4.3	274 320	LQ0	P404		MP2	T21	TP7 TP33
3462	TOXINS, EXTRACTED FROM LIVING SOURCES, SOLID, N.O.S.	6.1	T2	I	6.1	210 274	LQ0	P002 IBC07		MP18	T6	TP9 TP33
3462	TOXINS, EXTRACTED FROM LIVING SOURCES, SOLID, N.O.S.	6.1	T2	II	6.1	210 274	LQ18	P002 IBC08	B4	MP10	T3	TP33
3462	TOXINS, EXTRACTED FROM LIVING SOURCES, SOLID, N.O.S.	6.1	T2	III	6.1	210 274	LQ9	P002 IBC08 R001	B3	MP10	T1	TP33
3464	ORGANOPHOSPHORUS COMPOUND, TOXIC, SOLID, N.O.S.	6.1	T2	I	6.1	43 274	LQ0	P002 IBC07		MP18	T6	TP9 TP33
3464	ORGANOPHOSPHORUS COMPOUND, TOXIC, SOLID, N.O.S.	6.1	T2	II	6.1	43 274	LQ18	P002 IBC08	B4	MP10	T3	TP33
3464	ORGANOPHOSPHORUS COMPOUND, TOXIC, SOLID, N.O.S.	6.1	T2	III	6.1	43 274	LQ9	P002 IBC08 LP02 R001	B3	MP10	T1	TP33
3465	ORGANOARSENIC COMPOUND, SOLID, N.O.S.	6.1	T3	I	6.1	274	LQ0	P002 IBC07		MP18	T6	TP9 TP33
3465	ORGANOARSENIC COMPOUND, SOLID, N.O.S.	6.1	T3	II	6.1	274	LQ18	P002 IBC08	B4	MP10	T3	TP33
3465	ORGANOARSENIC COMPOUND, SOLID, N.O.S.	6.1	T3	III	6.1	274	LQ9	P002 IBC08 LP02 R001	B3	MP10	T1	TP33
3466	METAL CARBONYLS, SOLID, N.O.S.	6.1	T3	I	6.1	274 562	LQ0	P002 IBC07		MP18	T6	TP9 TP33
3466	METAL CARBONYLS, SOLID, N.O.S.	6.1	T3	II	6.1	274 562	LQ18	P002 IBC08	B4	MP10	T3	TP33
3466	METAL CARBONYLS, SOLID, N.O.S.	6.1	T3	III	6.1	274 562	LQ9	P002 IBC08 LP02 R001	B3	MP10	T1	TP33

ADR tank		Vehicle for tank carriage	Transport category	Special provisions for carriage				Hazard identification No.	UN No.	Name and description
Tank code	Special provisions			Packages	Bulk	Loading, unloading and handling	Operation			
4.3	4.3.5, 6.8.4	9.1.1.2	1.1.3.6	7.2.4	7.3.3	7.5.11	8.5	5.3.2.3		3.1.2
(12)	(13)	(14)	(15)	(16)	(17)	(18)	(19)	(20)	(1)	(2)
SGAV L4BN		AT	3		VV9b			80	3453	PHOSPHORIC ACID, SOLID
SGAH L4BH	TU15 TE15 TE19	AT	2	V11		CV13 CV28	S9 S19	60	3454	DINITROTOLUENES, SOLID
SGAH L4BH	TU15 TE15 TE19	AT	2	V11		CV13 CV28	S9 S19	68	3455	CRESOLS, SOLID
SGAN L4BN		AT	2	V11				X80	3456	NITROSYLSULPHURIC ACID, SOLID
SGAH L4BH	TU15 TE15 TE19	AT	2		VV9b	CV13 CV28	S9	60	3457	CHLORONITROTOLUENES, SOLID
SGAH L4BH	TU15 TE15 TE19	AT	2		VV9b	CV13 CV28	S9	60	3458	NITROANISOLES, SOLID
SGAH L4BH	TU15 TE15 TE19	AT	2		VV9b	CV13 CV28	S9	60	3459	NITROBROMOBENZENES, SOLID
SGAH L4BH	TU15 TE15 TE19	AT	2		VV9b	CV13 CV28	S9	60	3460	N-ETHYLBENZYL-TOLUIDINES, SOLID
L21DH	TU4 TU14 TU22 TC1 TE21 TM1	AT	0	V1			S20	X333	3461	ALUMINIUM ALKYL HALIDES, SOLID
S10AH L10CH	TU15 TE19	AT	1	V10 V12		CV1 CV13 CV28	S9 S17	66	3462	TOXINS, EXTRACTED FROM LIVING SOURCES, SOLID, N.O.S.
SGAH L4BH	TU15 TE15 TE19	AT	2	V11		CV13 CV28	S9 S19	60	3462	TOXINS, EXTRACTED FROM LIVING SOURCES, SOLID, N.O.S.
SGAH L4BH	TU15 TE15 TE19	AT	2		VV9b	CV13 CV28	S9	60	3462	TOXINS, EXTRACTED FROM LIVING SOURCES, SOLID, N.O.S.
S10AH L10CH	TU14 TU15 TE19 TE21	AT	1	V10 V12		CV1 CV13 CV28	S9 S17	66	3464	ORGANOPHOSPHORUS COMPOUND, TOXIC, SOLID, N.O.S.
SGAH L4BH	TU15 TE15 TE19	AT		V11		CV13 CV28	S9 S19	60	3464	ORGANOPHOSPHORUS COMPOUND, TOXIC, SOLID, N.O.S.
SGAH L4BH	TU15 TE15 TE19	AT	2		VV9b	CV13 CV28	S9	60	3464	ORGANOPHOSPHORUS COMPOUND, TOXIC, SOLID, N.O.S.
S10AH L10CH	TU14 TU15 TE19 TE21	AT	1	V10 V12		CV1 CV13 CV28	S9 S17	66	3465	ORGANOARSENIC COMPOUND, SOLID, N.O.S.
SGAH L4BH	TU15 TE15 TE19	AT	2	V11		CV13 CV28	S9 S19	60	3465	ORGANOARSENIC COMPOUND, SOLID, N.O.S.
SGAH L4BH	TU15 TE15 TE19	AT	2		VV9b	CV13 CV28	S9	60	3465	ORGANOARSENIC COMPOUND, SOLID, N.O.S.
S10AH L10CH	TU14 TU15 TE19 TE21	AT	1	V10 V12		CV1 CV13 CV28	S9 S17	66	3466	METAL CARBONYLS, SOLID, N.O.S.
SGAH L4BH	TU15 TE15 TE19	AT	2	V11		CV13 CV28	S9 S19	60	3466	METAL CARBONYLS, SOLID, N.O.S.
SGAH L4BH	TU15 TE15 TE19	AT	2		VV9b	CV13 CV28	S9	60	3466	METAL CARBONYLS, SOLID, N.O.S.

UN No.	Name and description	Class	Classifi-cation code	Packing group	Labels	Special provi-sions	Limited quantities	Packaging			Portable tanks and bulk containers	
								Packing instruc-tions	Special packing provisions	Mixed packing provisions	Instruc-tions	Special provisions
	3.1.2	2.2	2.2	2.1.1.3	5.2.2	3.3	3.4.6	4.1.4	4.1.4	4.1.10	4.2.5.2 7.3.2	4.2.5.3
(1)	(2)	(3a)	(3b)	(4)	(5)	(6)	(7)	(8)	(9a)	(9b)	(10)	(11)
3467	ORGANOMETALLIC COMPOUND, TOXIC, SOLID, N.O.S.	6.1	T3	I	6.1	274 562	LQ0	P002 IBC07		MP18	T6	TP9 TP33
3467	ORGANOMETALLIC COMPOUND, TOXIC, SOLID, N.O.S.	6.1	T3	II	6.1	274 562	LQ18	P002 IBC08	B4	MP10	T3	TP33
3467	ORGANOMETALLIC COMPOUND, TOXIC, SOLID, N.O.S.	6.1	T3	III	6.1	274 562	LQ9	P002 IBC08 LP02 R001	B3	MP10	T1	TP33
3468	HYDROGEN IN A METAL HYDRIDE STORAGE SYSTEM	2	1F		2.1	321	LQ0	P099		MP9		

ADR tank		Vehicle for tank carriage	Transport category	Special provisions for carriage				Hazard identifi-cation No.	UN No.	Name and description
Tank code	Special provisions			Packages	Bulk	Loading, unloading and handling	Operation			
4.3	4.3.5, 6.8.4	9.1.1.2	1.1.3.6	7.2.4	7.3.3	7.5.11	8.5	5.3.2.3		3.1.2
(12)	(13)	(14)	(15)	(16)	(17)	(18)	(19)	(20)	(1)	(2)
S10AH L10CH	TU14 TU15 TE19 TE21	AT	1	V10 V12		CV1 CV13 CV28	S9 S17	66	3467	ORGANOMETALLIC COMPOUND, TOXIC, SOLID, N.O.S.
SGAH L4BH	TU15 TE15 TE19	AT	2	V11		CV13 CV28	S9 S19	60	3467	ORGANOMETALLIC COMPOUND, TOXIC, SOLID, N.O.S.
SGAH L4BH	TU15 TE15 TE19	AT	2		VV9b	CV13 CV28	S9	60	3467	ORGANOMETALLIC COMPOUND, TOXIC, SOLID, N.O.S.
			2			CV9 CV10 CV36	S2 S20		3468	HYDROGEN IN A METAL HYDRIDE STORAGE SYSTEM

3.2.2 Table B: Alphabetic index of substances and articles of ADR

This index is an alphabetical list of the substances and articles which are listed in the UN numerical order in Table A of 3.2.1. It does not form an integral part of ADR. It has been submitted neither to the Working Party on the Transport of Dangerous Goods of the Inland Transport Committee for checking and approval nor to the Contracting Parties to ADR for formal acceptance. It has been prepared, with all necessary care by the Secretariat of the United Nations Economic Commission for Europe, in order to facilitate the consultation of Annexes A and B, but it cannot be relied upon as a substitute for the careful study and observance of the actual provisions of those annexes which, in case of conflict, are deemed to be authoritative. ONLY ADR AND ITS ANNEXES HAVE LEGAL FORCE.

NOTE 1*: For the purpose of determining the alphabetical order the following information has been ignored, even when it forms part of the proper shipping name: numbers; Greek letters; the abbreviations "sec" and "tert"; and the letters "N" (nitrogen), "n" (normal), "o" (ortho) "m" (meta), "p" (para) and "N.O.S." (not otherwise specified).*

NOTE 2*: The name of a substance or article in block capital letters indicates a proper shipping name (see 3.1.2).*

NOTE 3*: The name of a substance or article in block capital letters followed by the word "see" indicates an alternative proper shipping name or part of a proper shipping name (except for PCBs) (see 3.1.2.1).*

NOTE 4*: An entry in lower case letters followed by the word "see" indicates that the entry is not a proper shipping name; it is a synonym.*

NOTE 5*: Where an entry is partly in block capital letters and partly in lower case letters, the latter part is considered not to be part of the proper shipping name (see 3.1.2.1).*

NOTE 6*: A proper shipping name may be used in the singular or plural, as appropriate, for the purposes of documentation and package marking (see 3.1.2.3).*

NOTE 7*: For the exact determination of a proper shipping name, see 3.1.2.*

Name and description	UN No.	Class	Remarks
Accumulators, electric, see	2794 2795 2800 3028 3292	8 8 8 8 4.3	
ACETAL	1088	3	
ACETALDEHYDE	1089	3	
ACETALDEHYDE AMMONIA	1841	9	
ACETALDEHYDE OXIME	2332	3	
ACETIC ACID, GLACIAL	2789	8	
ACETIC ACID SOLUTION, more than 10% but not more than 80% acid, by mass	2790	8	
ACETIC ACID SOLUTION, more than 80% acid, by mass	2789	8	
ACETIC ANHYDRIDE	1715	8	
Acetoin, see	2621	3	
ACETONE	1090	3	
ACETONE CYANOHYDRIN, STABILIZED	1541	6.1	
ACETONE OILS	1091	3	
ACETONITRILE	1648	3	
ACETYL BROMIDE	1716	8	
ACETYL CHLORIDE	1717	3	
ACETYLENE, DISSOLVED	1001	2	
ACETYLENE, SOLVENT FREE	3374	2	
Acetylene tetrabromide, see	2504	6.1	
Acetylene tetrachloride, see	1702	6.1	
ACETYL IODIDE	1898	8	
ACETYL METHYL CARBINOL	2621	3	
Acid butyl phosphate, see	1718	8	
Acid mixture, hydrofluoric and sulphuric, see	1786	8	
Acid mixture, nitrating acid, see	1796	8	
Acid mixture, spent, nitrating acid, see	1826	8	
Acraldehyde, inhibited, see	1092	6.1	
ACRIDINE	2713	6.1	
ACROLEIN DIMER, STABILIZED	2607	3	
ACROLEIN, STABILIZED	1092	6.1	
ACRYLAMIDE, SOLID	2074	6.1	
ACRYLAMIDE, SOLUTION	3426	6.1	
ACRYLIC ACID, STABILIZED	2218	8	
ACRYLONITRILE, STABILIZED	1093	3	
Actinolite, see	2590	9	
Activated carbon, see	1362	4.2	
Activated charcoal, see	1362	4.2	
ADHESIVES containing flammable liquid	1133	3	
ADIPONITRILE	2205	6.1	
Aeroplane flares, see	0093 0403 0404 0420 0421	1 1 1 1 1	
AEROSOLS	1950	2	
AGENT, BLASTING, TYPE B	0331	1	
AGENT, BLASTING, TYPE E	0332	1	
AIR BAG INFLATORS	0503 3268	1 9	
AIR BAG MODULES	0503 3268	1 9	
AIR, COMPRESSED	1002	2	
Aircraft evacuation slides, see	2990	9	
AIRCRAFT HYDRAULIC POWER UNIT FUEL TANK (containing a mixture of anhydrous hydrazine and methylhydrazine) (M86 fuel)	3165	3	
Aircraft survival kits, see	2990	9	
AIR, REFRIGERATED LIQUID	1003	2	
ALCOHOLATES SOLUTION, N.O.S., in alcohol	3274	3	
Alcohol, denaturated, see	1986 1987	3 3	
Alcohol, industrial, see	1986 1987	3 3	
ALCOHOLS, N.O.S.	1987	3	
ALCOHOLS, FLAMMABLE, TOXIC, N.O.S.	1986	3	
ALCOHOLIC BEVERAGES, with more than 24% but not more than 70% alcohol by volume	3065	3	
ALCOHOLIC BEVERAGES, with more than 70% alcohol by volume	3065	3	

Name and description	UN No.	Class	Remarks
Aldehyde, see	1989	3	
ALDEHYDES, N.O.S.	1989	3	
ALDEHYDES, FLAMMABLE, TOXIC, N.O.S.	1988	3	
ALDOL	2839	6.1	
ALKALI METAL ALCOHOLATES, SELF-HEATING, CORROSIVE, N.O.S.	3206	4.2	
ALKALI METAL ALLOY, LIQUID, N.O.S.	1421	4.3	
ALKALI METAL AMALGAM, LIQUID	1389	4.3	
ALKALI METAL AMALGAM, SOLID	3401	4.3	
ALKALI METAL AMIDES	1390	4.3	
ALKALI METAL DISPERSION	1391	4.3	
Alkaline corrosive battery fluid, see	2797	8	
ALKALINE EARTH METAL ALCOHOLATES, N.O.S.	3205	4.2	
ALKALINE EARTH METAL ALLOY, N.O.S.	1393	4.3	
ALKALINE EARTH METAL AMALGAM, LIQUID	1392	4.3	
ALKALINE EARTH METAL AMALGAM, SOLID	3402	4.3	
ALKALINE EARTH METAL DISPERSION	1391	4.3	
ALKALOIDS, LIQUID, N.O.S.	3140	6.1	
ALKALOIDS, SOLID, N.O.S.	1544	6.1	
ALKALOID SALTS, LIQUID, N.O.S.	3140	6.1	
ALKALOID SALTS, SOLID, N.O.S.	1544	6.1	
Alkyl aluminium halides, see	3052	4.2	
ALKYLPHENOLS, LIQUID, N.O.S. (including C_2-C_{12} homologues)	3145	8	
ALKYLPHENOLS, SOLID, N.O.S. (including C_2-C_{12} homologues)	2430	8	
ALKYLSULPHONIC ACIDS, LIQUID with more than 5% free sulphuric acid	2584	8	
ALKYLSULPHONIC ACIDS, LIQUID with not more than 5% free sulphuric acid	2586	8	
ALKYLSULPHONIC ACIDS, SOLID with more than 5% free sulphuric acid	2583	8	
ALKYLSULPHONIC ACIDS, SOLID with not more than 5% free sulphuric acid	2585	8	
ALKYLSULPHURIC ACIDS	2571	8	
Allene, see	2200	2	
ALLYL ACETATE	2333	3	
ALLYL ALCOHOL	1098	6.1	
ALLYLAMINE	2334	6.1	
ALLYL BROMIDE	1099	3	
ALLYL CHLORIDE	1100	3	
Allyl chlorocarbonate, see	1722	6.1	
ALLYL CHLOROFORMATE	1722	6.1	
ALLYL ETHYL ETHER	2335	3	
ALLYL FORMATE	2336	3	
ALLYL GLYCIDYL ETHER	2219	3	
ALLYL IODIDE	1723	3	
ALLYL ISOTHIOCYANATE, STABILIZED	1545	6.1	
ALLYLTRICHLOROSILANE, STABILIZED	1724	8	
ALUMINIUM ALKYLS	3051	4.2	
ALUMINIUM ALKYL HALIDES, LIQUID	3052	4.2	
ALUMINIUM ALKYL HALIDES, SOLID	3461	4.2	
ALUMINIUM ALKYL HYDRIDES	3076	4.2	
ALUMINIUM BOROHYDRIDE	2870	4.2	
ALUMINIUM BOROHYDRIDE IN DEVICES	2870	4.2	
ALUMINIUM BROMIDE, ANHYDROUS	1725	8	
ALUMINIUM BROMIDE SOLUTION	2580	8	
ALUMINIUM CARBIDE	1394	4.3	
ALUMINIUM CHLORIDE, ANHYDROUS	1726	8	
ALUMINIUM CHLORIDE SOLUTION	2581	8	

Name and description	UN No.	Class	Remarks
Aluminium dross, see	3170	4.3	
ALUMINIUM FERROSILICON POWDER	1395	4.3	
ALUMINIUM HYDRIDE	2463	4.3	
ALUMINIUM NITRATE	1438	5.1	
ALUMINIUM PHOSPHIDE	1397	4.3	
ALUMINIUM PHOSPHIDE PESTICIDE	3048	6.1	
ALUMINIUM POWDER, COATED	1309	4.1	
ALUMINIUM POWDER, UNCOATED	1396	4.3	
ALUMINIUM REMELTING BY-PRODUCTS	3170	4.3	
ALUMINIUM RESINATE	2715	4.1	
ALUMINIUM SILICON POWDER, UNCOATED	1398	4.3	
ALUMINIUM SMELTING BY-PRODUCTS	3170	4.3	
Amatols, see	0082	1	
AMINES, FLAMMABLE, CORROSIVE, N.O.S.	2733	3	
AMINES, LIQUID, CORROSIVE, N.O.S.	2735	8	
AMINES, LIQUID, CORROSIVE, FLAMMABLE, N.O.S.	2734	8	
AMINES, SOLID, CORROSIVE, N.O.S.	3259	8	
Aminobenzene, see	1547	6.1	
2-Aminobenzotrifluoruride, see	2942	6.1	
3-Aminobenzotrifluoruride, see	2948	6.1	
Aminobutane, see	1125	3	
2-AMINO-4-CHLOROPHENOL	2673	6.1	
2-AMINO-5-DIETHYL-AMINOPENTANE	2946	6.1	
2-AMINO-4,6-DINITROPHENOL, WETTED with not less than 20% water, by mass	3317	4.1	
2-(2-AMINOETHOXY) ETHANOL	3055	8	
N-AMINOETHYLPIPERAZINE	2815	8	
1-Amino-2-nitrobenzene, see	1661	6.1	
1-Amino-3-nitrobenzene, see	1661	6.1	
1-Amino-4-nitrobenzene, see	1661	6.1	
AMINOPHENOLS (o-, m-, p-)	2512	6.1	
AMINOPYRIDINES (o-, m-, p-)	2671	6.1	
AMMONIA, ANHYDROUS	1005	2	
AMMONIA SOLUTION relative density between 0.880 and 0.957 at 15 °C in water, with more than 10% but not more than 35% ammonia	2672	8	
AMMONIA SOLUTION, relative density less than 0.880 at 15 °C in water, with more than 35% but not more than 50% ammonia	2073	2	
AMMONIA SOLUTION, relative density less than 0.880 at 15 °C in water, with more than 50% ammonia	3318	2	
AMMONIUM ARSENATE	1546	6.1	
Ammonium bichromate, see	1439	5.1	
Ammonium bifluoride solid, see	1727	8	
Ammonium bifluoride solution, see	2817	8	
Ammonium bisulphate, see	2506	8	
Ammonium bisulphite solution, see	2693	8	
AMMONIUM DICHROMATE	1439	5.1	
AMMONIUM DINITRO-o-CRESOLATE, SOLID	1843	6.1	
AMMONIUM DINITRO-o-CRESOLATE, SOLUTION	3424	6.1	
AMMONIUM FLUORIDE	2505	6.1	
AMMONIUM FLUORO-SILICATE	2854	6.1	
Ammonium hexafluorosilicate, see	2854	6.1	
AMMONIUM HYDROGENDIFLUORIDE, SOLID	1727	8	
AMMONIUM HYDROGENDIFLUORIDE SOLUTION	2817	8	
AMMONIUM HYDROGEN SULPHATE	2506	8	

Name and description	UN No.	Class	Remarks
Ammonium hydrosulphide solution (treat as ammonium sulphide solution), see	2683	8	
AMMONIUM METAVANADATE	2859	6.1	
AMMONIUM NITRATE with more than 0.2% combustible substances, including any organic substance calculated as carbon, to the exclusion of any other added substance	0222	1	
AMMONIUM NITRATE with not more than 0.2% total combustible material, including any organic substance calculated as carbon, to the exclusion of any other added substance	1942	5.1	
AMMONIUM NITRATE EMULSION, intermediate for blasting explosives, liquid	3375	5.1	
AMMONIUM NITRATE EMULSION, intermediate for blasting explosives, solid	3375	5.1	
Ammonium nitrate explosive, see	0082 0331	1 1	
AMMONIUM NITRATE BASED FERTILIZER	2067	5.1	
Ammonium nitrate based fertilizer, uniform mixtures of the nitrogen/phosphate, nitrogen/potash or nitrogen/phosphate/potash type, containing not more than 70% ammonium nitrate and not more than 0.4% total combustible/organic material calculated as carbon or with not more than 45% ammonium nitrate and unrestricted combustible material	2071	9	Not subject to ADR
AMMONIUM NITRATE GEL, intermediate for blasting explosives, liquid	3375	5.1	
AMMONIUM NITRATE GEL, intermediate for blasting explosives, solid	3375	5.1	
AMMONIUM NITRATE, LIQUID hot concentrated solution, in a concentration of more than 80% but not more than 93%	2426	5.1	
AMMONIUM NITRATE SUSPENSION, intermediate for blasting explosives, liquid	3375	5.1	
AMMONIUM NITRATE SUSPENSION, intermediate for blasting explosives, solid	3375	5.1	
AMMONIUM PERCHLORATE	0402 1442	1 5.1	
Ammonium permanganate, see	1482	5.1	
AMMONIUM PERSULPHATE	1444	5.1	
AMMONIUM PICRATE dry or wetted with less than 10% water, by mass	0004	1	
AMMONIUM PICRATE, WETTED with not less than 10% water, by mass	1310	4.1	
AMMONIUM POLYSULPHIDE SOLUTION	2818	8	
AMMONIUM POLYVANADATE	2861	6.1	
Ammonium silicofluoride, see	2854	6.1	
AMMONIUM SULPHIDE SOLUTION	2683	8	
Ammunition, blank, see	0014 0326 0327 0338 0413	1 1 1 1 1	
Ammunition, fixed Ammunition, semi-fixed Ammunition, separate loading, see	0005 0006 0007 0321 0348 0412	1 1 1 1 1 1	
AMMUNITION, ILLUMINATING with or without burster, expelling charge or propelling charge	0171 0254 0297	1 1 1	
AMMUNITION, INCENDIARY, liquid or gel, with burster, expelling charge or propelling charge	0247	1	
AMMUNITION, INCENDIARY with or without burster, expelling charge or propelling charge	0009 0010 0300	1 1 1	
Ammunition, incendiary (water-activated contrivances) with burster, expelling charge or propelling charge, see	0248 0249	1 1	

Name and description	UN No.	Class	Remarks
AMMUNITION, INCENDIARY, WHITE PHOSPHORUS with burster, expelling charge or propelling charge	0243 0244	1 1	
Ammunition, industrial, see	0275 0276 0277 0278 0323 0381	1 1 1 1 1 1	
Ammunition, lachrymatory, see	0018 0019 0301 2017	1 1 1 1	
AMMUNITION, PRACTICE	0362 0488	1 1	
AMMUNITION, PROOF	0363	1	
AMMUNITION, SMOKE with or without burster, expelling charge or propelling charge	0015 0016 0303	1 1 1	
Ammunition, smoke (water-activated contrivances), white phosphorus with burster, expelling charge or propelling charge, see	0248	1	
Ammunition, smoke (water-activated contrivances), without white phosphorus or phosphides with burster, expelling charge or propelling charge, see	0249	1	
AMMUNITION, SMOKE, WHITE PHOSPHORUS with burster, expelling charge or propelling charge	0245 0246	1 1	
Ammunition, sporting, see	0012 0328 0339 0417	1 1 1 1	
AMMUNITION, TEAR-PRODUCING, NON-EXPLOSIVE without burster or expelling charge, non-fuzed	2017	6.1	
AMMUNITION, TEAR-PRODUCING with burster, expelling charge or propelling charge	0018 0019 0301	1 1 1	
AMMUNITION, TOXIC with burster, expelling charge or propelling charge	0020	1	Carriage prohi-bited
AMMUNITION, TOXIC with burster, expelling charge or propelling charge	0021	1	Carriage prohi-bited
Ammunition, toxic (water-activated contrivances) with burster, expelling charge or propelling charge, see	0248 0249	1 1	
AMMUNITION, TOXIC, NON-EXPLOSIVE without burster or expelling charge, non-fuzed	2016	6.1	
Amorces (caps, toy), see	0333 0336 0337	1 1 1	
Amosite, see	2212	9	
AMYL ACETATES	1104	3	
AMYL ACID PHOSPHATE	2819	8	
Amyl aldehyde, see	2058	3	
AMYLAMINE	1106	3	
AMYL BUTYRATES	2620	3	
AMYL CHLORIDE	1107	3	
n-AMYLENE, see	1108	3	
AMYL FORMATES	1109	3	
AMYL MERCAPTAN	1111	3	
n-AMYL METHYL KETONE	1110	3	
AMYL NITRATE	1112	3	
AMYL NITRITE	1113	3	
AMYLTRICHLOROSILANE	1728	8	
Anaesthetic ether, see	1155	3	
ANILINE	1547	6.1	
Aniline chloride, see	1548	6.1	
ANILINE HYDROCHLORIDE	1548	6.1	
Aniline oil, see	1547	6.1	
Aniline salt, see	1548	6.1	
ANISIDINES	2431	6.1	
ANISOLE	2222	3	
ANISOYL CHLORIDE	1729	8	
Anthophyllite, see	2590	9	
Antimonous chloride, see	1733	8	
ANTIMONY COMPOUND, INORGANIC, LIQUID, N.O.S.	3141	6.1	
ANTIMONY COMPOUND, INORGANIC, SOLID, N.O.S.	1549	6.1	
Antimony hydride, see	2676	2	
ANTIMONY LACTATE	1550	6.1	
Antimony (III) lactate, see	1550	6.1	

Name and description	UN No.	Class	Remarks
ANTIMONY PENTACHLORIDE, LIQUID	1730	8	
ANTIMONY PENTACHLORIDE SOLUTION	1731	8	
ANTIMONY PENTAFLUORIDE	1732	8	
Antimony perchloride, liquid, see	1730	8	
ANTIMONY POTASSIUM TARTRATE	1551	6.1	
ANTIMONY POWDER	2871	6.1	
ANTIMONY TRICHLORIDE	1733	8	
A.n.t.u., see	1651	6.1	
ARGON, COMPRESSED	1006	2	
ARGON, REFRIGERATED LIQUID	1951	2	
Arsenates, n.o.s., see	1556 1557	6.1 6.1	
ARSENIC	1558	6.1	
ARSENIC ACID, LIQUID	1553	6.1	
ARSENIC ACID, SOLID	1554	6.1	
ARSENICAL DUST	1562	6.1	
Arsenical flue dust, see	1562	6.1	
ARSENICAL PESTICIDE, LIQUID, FLAMMABLE, TOXIC, flash-point less than 23 °C	2760	3	
ARSENICAL PESTICIDE, LIQUID, TOXIC	2994	6.1	
ARSENICAL PESTICIDE, LIQUID, TOXIC, FLAMMABLE, flash-point not less than 23 °C	2993	6.1	
ARSENICAL PESTICIDE, SOLID, TOXIC	2759	6.1	
ARSENIC BROMIDE	1555	6.1	
Arsenic (III) bromide, see	1555	6.1	
Arsenic chloride, see	1560	6.1	
ARSENIC COMPOUND, LIQUID, N.O.S., inorganic, including: Arsenates, n.o.s., Arsenites, n.o.s.; and Arsenic sulphides, n.o.s.	1556	6.1	
ARSENIC COMPOUND, SOLID, N.O.S., inorganic, including: Arsenates, n.o.s.; Arsenites, n.o.s.; and Arsenic sulphides, n.o.s.	1557	6.1	
Arsenic (III) oxide, see	1561	6.1	
Arsenic (V) oxide, see	1559	6.1	
ARSENIC PENTOXIDE	1559	6.1	
Arsenic sulphides, see	1556 1557	6.1 6.1	
ARSENIC TRICHLORIDE	1560	6.1	
ARSENIC TRIOXIDE	1561	6.1	
Arsenious chloride, see	1560	6.1	
Arsenites, n.o.s., see	1556 1557	6.1 6.1	
Arsenous chloride, see	1560	6.1	
ARSINE	2188	2	
ARTICLES, EEI, see	0486	1	
ARTICLES, EXPLOSIVE, EXTREMELY INSENSITIVE	0486	1	
ARTICLES, EXPLOSIVE, N.O.S.	0349 0350 0351 0352 0353 0354 0355 0356 0462 0463 0464 0465 0466 0467 0468 0469 0470 0471 0472	1 1 1 1 1 1 1 1 1 1 1 1 1 1 1 1 1 1 1	
ARTICLES, PRESSURIZED, HYDRAULIC (containing non-flammable gas)	3164	2	
ARTICLES, PRESSURIZED, PNEUMATIC (containing non-flammable gas)	3164	2	
ARTICLES, PYROPHORIC	0380	1	
ARTICLES, PYROTECHNIC for technical purposes	0428 0429 0430 0431 0432	1 1 1 1 1	

Name and description	UN No.	Class	Remarks
ARYLSULPHONIC ACIDS, LIQUID with more than 5% free sulphuric acid	2584	8	
ARYLSULPHONIC ACIDS, LIQUID with not more than 5% free sulphuric acid	2586	8	
ARYLSULPHONIC ACIDS, SOLID with more than 5% free sulphuric acid	2583	8	
ARYLSULPHONIC ACIDS, SOLID with not more than 5% free sulphuric acid	2585	8	
Asbestos, blue or brown, see	2212	9	
Asbestos, white, see	2590	9	
Asphalt, see	1999	3	
Aviation regulated liquid, n.o.s.	3334	9	Not subject to ADR
Aviation regulated solid, n.o.s.	3335	9	Not subject to ADR
AZODICARBONAMIDE	3242	4.1	
Bag charges, see	0242 0279 0414	1 1 1	
Ballistite, see	0160 0161	1 1	
Bangalore torpedoes, see	0136 0137 0138 0294	1 1 1 1	
BARIUM	1400	4.3	
BARIUM ALLOYS, PYROPHORIC	1854	4.2	
BARIUM AZIDE, dry or wetted with less than 50% water, by mass	0224	1	
BARIUM AZIDE, WETTED with not less than 50% water, by mass	1571	4.1	
Barium binoxide, see	1449	5.1	
BARIUM BROMATE	2719	5.1	
BARIUM CHLORATE, SOLID	1445	5.1	
BARIUM CHLORATE, SOLUTION	3405	5.1	
BARIUM COMPOUND, N.O.S.	1564	6.1	
BARIUM CYANIDE	1565	6.1	
Barium dioxide, see	1449	5.1	
BARIUM HYPOCHLORITE with more than 22% available chlorine	2741	5.1	
BARIUM NITRATE	1446	5.1	
BARIUM OXIDE	1884	6.1	
BARIUM PERCHLORATE, SOLID	1447	5.1	
BARIUM PERCHLORATE, SOLUTION	3406	5.1	
BARIUM PERMANGANATE	1448	5.1	
BARIUM PEROXIDE	1449	5.1	
Barium selenate, see	2630	6.1	
Barium selenite, see	2630	6.1	
Barium superoxide, see	1449	5.1	
BATTERIES, CONTAINING SODIUM	3292	4.3	
BATTERIES, DRY, CONTAINING POTASSIUM HYDROXIDE SOLID, electric storage	3028	8	
BATTERIES, WET, FILLED WITH ACID, electric storage	2794	8	
BATTERIES, WET, FILLED WITH ALKALI, electric storage	2795	8	
BATTERIES, WET, NON-SPILLABLE, electric storage	2800	8	
BATTERY FLUID, ACID	2796	8	
BATTERY FLUID, ALKALI	2797	8	
Battery-powered vehicle or Battery-powered equipment	3171	9	Not subject to ADR
BENZALDEHYDE	1990	9	
BENZENE	1114	3	
1,4-Benzenediol, see	2662 3435	6.1 6.1	
BENZENESULPHONYL CHLORIDE	2225	8	
Benzenethiol, see	2337	6.1	
BENZIDINE	1885	6.1	
Benzol, see	1114	3	
Benzolene, see	1268	3	
BENZONITRILE	2224	6.1	
BENZOQUINONE	2587	6.1	
Benzosulphochloride, see	2225	8	
BENZOTRICHLORIDE	2226	8	

Name and description	UN No.	Class	Remarks
BENZOTRIFLUORIDE	2338	3	
BENZOYL CHLORIDE	1736	8	
BENZYL BROMIDE	1737	6.1	
BENZYL CHLORIDE	1738	6.1	
Benzyl chlorocarbonate, see	1739	8	
BENZYL CHLOROFORMATE	1739	8	
Benzyl cyanide, see	2470	6.1	
BENZYLDIMETHYLAMINE	2619	8	
BENZYLIDENE CHLORIDE	1886	6.1	
BENZYL IODIDE	2653	6.1	
BERYLLIUM COMPOUND, N.O.S.	1566	6.1	
BERYLLIUM NITRATE	2464	5.1	
BERYLLIUM POWDER	1567	6.1	
Bhusa	1327	4.1	Not subject to ADR
BICYCLO[2.2.1]HEPTA-2,5-DIENE, STABILIZED	2251	3	
Bifluorides, n.o.s., see	1740	8	
(BIO) MEDICAL WASTE, N.O.S.	3291	6.2	
BIPYRIDILIUM PESTICIDE, LIQUID, FLAMMABLE, TOXIC, flash-point less than 23 °C	2782	3	
BIPYRIDILIUM PESTICIDE, LIQUID, TOXIC	3016	6.1	
BIPYRIDILIUM PESTICIDE, LIQUID, TOXIC, FLAMMABLE, flash-point not less than 23 °C	3015	6.1	
BIPYRIDILIUM PESTICIDE, SOLID, TOXIC	2781	6.1	
BISULPHATES, AQUEOUS SOLUTION	2837	8	
BISULPHITES, AQUEOUS SOLUTION, N.O.S.	2693	8	
Bitumen, see	1999	3	
BLACK POWDER, COMPRESSED	0028	1	
BLACK POWDER, granular or as a meal	0027	1	
BLACK POWDER, IN PELLETS	0028	1	

Name and description	UN No.	Class	Remarks
Blasting cap assemblies, see	0360 0361	1 1	
Blasting caps, electric, see	0030 0255 0456	1 1 1	
Blasting caps, non electric, see	0029 0267 0455	1 1 1	
Blau gas, see	2600	2	
Bleaching powder, see	2208	5.1	
BLUE ASBESTOS (crocidolite)	2212	9	
BOMBS with bursting charge	0033 0034 0035 0291	1 1 1 1	
Bombs, illuminating, see	0254	1	
BOMBS, PHOTO-FLASH	0037 0038 0039 0299	1 1 1 1	
BOMBS, SMOKE, NON-EXPLOSIVE with corrosive liquid, without initiating device	2028	8	
Bombs, target identification, see	0171 0254 0297	1 1 1	
BOMBS WITH FLAMMABLE LIQUID with bursting charge	0399 0400	1 1	
BOOSTERS WITH DETONATOR	0225 0268	1 1	
BOOSTERS without detonator	0042 0283	1 1	
Borate and chlorate mixture, see	1458	5.1	
BORNEOL	1312	4.1	
BORON TRIBROMIDE	2692	8	
BORON TRICHLORIDE	1741	2	
BORON TRIFLUORIDE ACETIC ACID COMPLEX, LIQUID	1742	8	
BORON TRIFLUORIDE ACETIC ACID COMPLEX, SOLID	3419	8	
BORON TRIFLUORIDE	1008	2	
BORON TRIFLUORIDE DIETHYL ETHERATE	2604	8	
BORON TRIFLUORIDE DIHYDRATE	2851	8	

Name and description	UN No.	Class	Remarks
BORON TRIFLUORIDE DIMETHYL ETHERATE	2965	4.3	
BORON TRIFLUORIDE PROPIONIC ACID COMPLEX, LIQUID	1743	8	
BORON TRIFLUORIDE PROPIONIC ACID COMPLEX, SOLID	3420	8	
BROMATES, INORGANIC, N.O.S.	1450	5.1	
BROMATES, INORGANIC, AQUEOUS SOLUTION, N.O.S	3213	5.1	
BROMINE	1744	8	
BROMINE CHLORIDE	2901	2	
BROMINE PENTAFLUORIDE	1745	5.1	
BROMINE SOLUTION	1744	8	
BROMINE TRIFLUORIDE	1746	5.1	
BROMOACETIC ACID, SOLID	3425	8	
BROMOACETIC ACID, SOLUTION	1938	8	
BROMOACETONE	1569	6.1	
omega-Bromoacetone, see	2645	6.4	
BROMOACETYL BROMIDE	2513	8	
BROMOBENZENE	2514	3	
BROMOBENZYL CYANIDES, LIQUID	1694	6.1	
BROMOBENZYL CYANIDES, SOLID	3449	6.1	
1-BROMOBUTANE	1126	3	
2-BROMOBUTANE	2339	3	
BROMOCHLOROMETHANE	1887	6.1	
1-BROMO-3-CHLORO-PROPANE	2688	6.1	
1-Bromo-2,3-epoxypropane, see	2558	6.1	
Bromoethane, see	1891	6.1	
2-BROMOETHYL ETHYL ETHER	2340	3	
BROMOFORM	2515	6.1	
Bromomethane, see	1062	2	
1-BROMO-3-METHYL-BUTANE	2341	3	
BROMOMETHYLPROPANES	2342	3	
2-BROMO-2-NITROPROPANE-1,3-DIOL	3241	4.1	
2-BROMOPENTANE	2343	3	
BROMOPROPANES	2344	3	
3-BROMOPROPYNE	2345	3	
BROMOTRIFLUORO-ETHYLENE	2419	2	
BROMOTRIFLUORO-METHANE	1009	2	
BROWN ASBESTOS (amosite, mysorite)	2212	9	
BRUCINE	1570	6.1	
BURSTERS, explosive	0043	1	
BUTADIENES AND HYDROCARBON MIXTURE, STABILIZED, having a vapour pressure at 70 °C not exceeding 1.1 MPa (11 bar) and a density at 50 °C not lower than 0.525 kg/l	1010	2	
BUTADIENES, STABILIZED, having a vapour pressure at 70 °C not exceeding 1.1 MPa (11 bar) and a density at 50 °C not lower than 0.525 kg/l	1010	2	
BUTANE	1011	2	
BUTANEDIONE	2346	3	
Butane-1-thiol, see	2347	3	
BUTANOLS	1120	3	
1-Butanol, see	1120	3	
Butan-2-ol, see	1120	3	
Butanol, secondary, see	1120	3	
Butanol, tertiary, see	1120	3	
Butanone, see	1193	3	
2-Butenal, see	1143	6.1	
Butene, see	1012	2	
Bute-1-ene-3-one, see	1251	3	
1,2-Buteneoxide, see	3022	3	
2-Buten-1-ol, see	2614	3	
BUTYL ACETATES	1123	3	
Butyl acetate, secondary, see	1123	3	
BUTYL ACID PHOSPHATE	1718	8	
BUTYL ACRYLATES, STABILIZED	2348	3	
Butyl alcohols, see	1120	3	
n-BUTYLAMINE	1125	3	
N-BUTYLANILINE	2738	6.1	
sec-Butyl benzene, see	2709	3	

Name and description	UN No.	Class	Remarks
BUTYLBENZENES	2709	3	
n-Butyl bromide, see	1126	3	
n-Butyl chloride, see	1127	3	
n-BUTYL CHLOROFORMATE	2743	6.1	
tert-BUTYLCYCLOHEXYL CHLOROFORMATE	2747	6.1	
BUTYLENES MIXTURE or 1-BUTYLENE or CIS-2-BUTYLENE or TRANS-2-BUTYLENE	1012	2	
1,2-BUTYLENE OXIDE, STABILIZED	3022	3	
Butyl ethers, see	1149	3	
Butyl ethyl ether, see	1179	3	
n-BUTYL FORMATE	1128	3	
tert-BUTYL HYPOCHLORITE	3255	4.2	Carriage prohi-bited
N,n-BUTYLIMIDAZOLE	2690	6.1	
N,n-Butyliminazole, see	2690	6.1	
n-BUTYL ISOCYANATE	2485	6.1	
tert-BUTYL ISOCYANATE	2484	6.1	
Butyl lithium, see	2445	4.2	
BUTYL MERCAPTAN	2347	3	
n-BUTYL METHACRYLATE, STABILIZED	2227	3	
BUTYL METHYL ETHER	2350	3	
BUTYL NITRITES	2351	3	
Butylphenols, liquid, see	3145	8	
Butylphenols, solid, see	2430	8	
BUTYL PROPIONATES	1914	3	
p-tert-Butyltoluene, see	2667	6.1	
BUTYLTOLUENES	2667	6.1	
BUTYLTRICHLOROSILANE	1747	8	
5-tert-BUTYL-2,4,6-TRINITRO-m-XYLENE	2956	4.1	
BUTYL VINYL ETHER, STABILIZED	2352	3	
But-1-yne, see	2452	2	
1,4-BUTYNEDIOL	2716	6.1	
2-Butyne-1,4-diol, see	2716	6.1	
BUTYRALDEHYDE	1129	3	
BUTYRALDOXIME	2840	3	

Name and description	UN No.	Class	Remarks
BUTYRIC ACID	2820	8	
BUTYRIC ANHYDRIDE	2739	8	
Butyrone, see	2710	3	
BUTYRONITRILE	2411	3	
Butyroyl chloride, see	2353	3	
BUTYRYL CHLORIDE	2353	3	
Cable cutters, explosive, see	0070	1	
CACODYLIC ACID	1572	6.1	
CADMIUM COMPOUND	2570	6.1	
CAESIUM	1407	4.3	
CAESIUM HYDROXIDE	2682	8	
CAESIUM HYDROXIDE SOLUTION	2681	8	
CAESIUM NITRATE	1451	5.1	
Caffeine, see	1544	6.1	
Cajeputene, see	2052	3	
CALCIUM	1401	4.3	
CALCIUM ALLOYS, PYROPHORIC	1855	4.2	
CALCIUM ARSENATE	1573	6.1	
CALCIUM ARSENATE AND CALCIUM ARSENITE MIXTURE, SOLID	1574	6.1	
Calcium bisulphite solution, see	2693	8	
CALCIUM CARBIDE	1402	4.3	
CALCIUM CHLORATE	1452	5.1	
CALCIUM CHLORATE, AQUEOUS SOLUTION	2429	5.1	
CALCIUM CHLORITE	1453	5.1	
CALCIUM CYANAMIDE with more than 0.1% calcium carbide	1403	4.3	
CALCIUM CYANIDE	1575	6.1	
CALCIUM DITHIONITE	1923	4.2	
CALCIUM HYDRIDE	1404	4.3	
CALCIUM HYDROSULPHITE, see	1923	4.2	
CALCIUM HYPOCHLORITE, DRY with more than 39% available chlorine (8.8% available oxygen)	1748	5.1	
CALCIUM HYPOCHLORITE, HYDRATED with not less than 5.5% but not more than 16% water	2880	5.1	

Name and description	UN No.	Class	Remarks
CALCIUM HYPOCHLORITE, HYDRATED MIXTURE with not less than 5.5% but not more than 16% water	2880	5.1	
CALCIUM HYPOCHLORITE MIXTURE, DRY with more than 10% but not more than 39% available chlorine	2208	5.1	
CALCIUM HYPOCHLORITE MIXTURE, DRY with more than 39% available chlorine (8.8% available oxygen)	1748	5.1	
CALCIUM MANGANESE SILICON	2844	4.3	
CALCIUM NITRATE	1454	5.1	
Calcium oxide	1910	8	Not subject to ADR
CALCIUM PERCHLORATE	1455	5.1	
CALCIUM PERMANGANATE	1456	5.1	
CALCIUM PEROXIDE	1457	5.1	
CALCIUM PHOSPHIDE	1360	4.3	
CALCIUM, PYROPHORIC	1855	4.2	
CALCIUM RESINATE	1313	4.1	
CALCIUM RESINATE, FUSED	1314	4.1	
Calcium selenate, see	2630	6.1	
CALCIUM SILICIDE	1405	4.3	
Calcium silicon, see	1405	4.3	
Calcium superoxide, see	1457	5.1	
Camphanone, see	2717	4.1	
CAMPHOR OIL	1130	3	
CAMPHOR, synthetic	2717	4.1	
CAPROIC ACID	2829	8	
CARBAMATE PESTICIDE, LIQUID, FLAMMABLE, TOXIC, flash-point less than 23 °C	2758	3	
CARBAMATE PESTICIDE, LIQUID, TOXIC	2992	6.1	
CARBAMATE PESTICIDE, LIQUID, TOXIC, FLAMMABLE, flash-point not less than 23 °C	2991	6.1	
CARBAMATE PESTICIDE, SOLID, TOXIC	2757	6.1	

Name and description	UN No.	Class	Remarks
Carbolic acid, see	1671 2312 2821	6.1 6.1 6.1	
CARBON, animal or vegetable origin	1361	4.2	
CARBON, ACTIVATED	1362	4.2	
Carbon bisulphide, see	1131	3	
Carbon black (animal or vegetable origin), see	1361	4.2	
CARBON DIOXIDE	1013	2	
Carbon dioxide and ethylene oxide mixture, see	1041 1952 3300	2 2 2	
CARBON DIOXIDE AND NITROUS OXIDE MIXTURE	1015	2	
CARBON DIOXIDE AND OXYGEN MIXTURE, COMPRESSED	1014	2	
CARBON DIOXIDE, REFRIGERATED LIQUID	2187	2	
Carbon dioxide, solid	1845	9	Not subject to ADR
CARBON DISULPHIDE	1131	3	
Carbonic anhydride, see	1013 1845 2187	2 9 2	
CARBON MONOXIDE, COMPRESSED	1016	2	
CARBON MONOXIDE AND HYDROGEN MIXTURE, COMPRESSED	2600	2	
Carbon oxysulphide, see	2204	2.3	
CARBON TETRABROMIDE	2516	6.1	
CARBON TETRACHLORIDE	1846	6.1	
Carbonyl chloride, see	1076	2	
CARBONYL FLUORIDE	2417	2	
CARBONYL SULPHIDE	2204	2	
Cartridge cases, empty, primed, see	0055 0379	1 1	
Cartridges, actuating, for fire extinguisher or apparatus valve, see	0275 0276 0323 0381	1 1 1 1	
Cartridges, explosive, see	0048	1	
CARTRIDGES, FLASH	0049 0050	1 1	

Name and description	UN No.	Class	Remarks
CARTRIDGES FOR WEAPONS with bursting charge	0005	1	
	0006	1	
	0007	1	
	0321	1	
	0348	1	
	0412	1	
CARTRIDGES FOR WEAPONS, BLANK	0014	1	
	0326	1	
	0327	1	
	0338	1	
	0413	1	
CARTRIDGES FOR WEAPONS, INERT PROJECTILE	0012	1	
	0328	1	
	0339	1	
	0417	1	
Cartridges, illuminating, see	0171	1	
	0254	1	
	0297	1	
CARTRIDGES, OIL WELL	0277	1	
	0278	1	
CARTRIDGES, POWER DEVICE	0275	1	
	0276	1	
	0323	1	
	0381	1	
CARTRIDGES, SIGNAL	0054	1	
	0312	1	
	0405	1	
CARTRIDGES, SMALL ARMS	0012	1	
	0339	1	
	0417	1	
CARTRIDGES, SMALL ARMS, BLANK	0014	1	
	0327	1	
	0338	1	
Cartridges, starter, jet engine, see	0275	1	
	0276	1	
	0323	1	
	0381	1	
CASES, CARTRIDGE, EMPTY, WITH PRIMER	0055	1	
	0379	1	
CASES, COMBUSTIBLE, EMPTY, WITHOUT PRIMER	0446	1	
	0447	1	
Casinghead gasoline, see	1203	3	
CASTOR BEANS	2969	9	
CASTOR FLAKE	2969	9	
CASTOR MEAL	2969	9	
CASTOR POMACE	2969	9	
CAUSTIC ALKALI LIQUID, N.O.S.	1719	8	
Caustic potash, see	1814	8	
Caustic soda, see	1824	8	
Caustic soda liquor, see	1824	8	
CELLS, CONTAINING SODIUM	3292	4.3	
CELLULOID in block, rods, rolls, sheets, tubes, etc., except scrap	2000	4.1	
CELLULOID, SCRAP	2002	4.2	
Cement, see	1133	3	
CERIUM, slabs, ingots or rods	1333	4.1	
CERIUM, turnings or gritty powder	3078	4.3	
Cer mishmetall, see	1323	4.1	
Charcoal, activated, see	1362	4.1	
Charcoal, non-activated, see	1361	4.2	
CHARGES, BURSTING, PLASTICS BONDED	0457	1	
	0458	1	
	0459	1	
	0460	1	
CHARGES, DEMOLITION	0048	1	
CHARGES, DEPTH	0056	1	
Charges, expelling, explosive, for fire extinguishers, see	0275	1	
	0276	1	
	0323	1	
	0381	1	
CHARGES, EXPLOSIVE, COMMERCIAL without detonator	0442	1	
	0443	1	
	0444	1	
	0445	1	
CHARGES, PROPELLING	0271	1	
	0272	1	
	0415	1	
	0491	1	
CHARGES, PROPELLING, FOR CANNON	0242	1	
	0279	1	
	0414	1	
CHARGES, SHAPED, FLEXIBLE, LINEAR	0237	1	
	0288	1	
CHARGES, SHAPED, without detonator	0059	1	
	0439	1	
	0440	1	
	0441	1	
CHARGES, SUPPLEMENTARY, EXPLOSIVE	0060	1	
CHEMICAL KIT	3316	9	
CHEMICAL SAMPLE, TOXIC	3315	6.1	
Chile saltpetre, see	1498	5.1	

Name and description	UN No.	Class	Remarks
CHLORAL, ANHYDROUS, STABILIZED	2075	6.1	
CHLORATE AND BORATE MIXTURE	1458	5.1	
CHLORATE AND MAGNESIUM CHLORIDE MIXTURE, SOLID	1459	5.1	
CHLORATE AND MAGNESIUM CHLORIDE MIXTURE, SOLUTION	3407	5.1	
CHLORATES, INORGANIC, N.O.S.	1461	5.1	
CHLORATES, INORGANIC, AQUEOUS SOLUTION, N.O.S.	3210	5.1	
CHLORIC ACID, AQUEOUS SOLUTION with not more than 10% chloric acid	2626	5.1	
CHLORINE	1017	2	
CHLORINE PENTAFLUORIDE	2548	2	
CHLORINE TRIFLUORIDE	1749	2	
CHLORITES, INORGANIC, N.O.S.	1462	5.1	
CHLORITE SOLUTION	1908	8	
Chloroacetaldehyde, see	2232	6.1	
CHLOROACETIC ACID, MOLTEN	3250	6.1	
CHLOROACETIC ACID, SOLID	1751	6.1	
CHLOROACETIC ACID SOLUTION	1750	6.1	
CHLOROACETONE, STABILIZED	1695	6.1	
CHLOROACETONITRILE	2668	6.1	
CHLOROACETOPHENONE, LIQUID	3416	6.1	
CHLOROACETOPHENONE, SOLID	1697	6.1	
CHLOROACETYL CHLORIDE	1752	6.1	
CHLOROANILINES, LIQUID	2019	6.1	
CHLOROANILINES, SOLID	2018	6.1	
CHLOROANISIDINES	2233	6.1	
CHLOROBENZENE	1134	3	
CHLOROBENZO-TRIFLUORIDES	2234	3	

Name and description	UN No.	Class	Remarks
CHLOROBENZYL CHLORIDES, LIQUID	2235	6.1	
CHLOROBENZYL CHLORIDES, SOLID	3427	6.1	
1-Chloro-3-bromopropane, see	2688	6.1	
1-Chlorobutane, see	1127	3	
2-Chlorobutane, see	1127	3	
CHLOROBUTANES	1127	3	
CHLOROCRESOLS, SOLUTION	2669	6.1	
CHLOROCRESOLS, SOLID	3437	6.1	
CHLORODIFLUORO-BROMOMETHANE	1974	2	
1-CHLORO-1,1-DIFLUORO-ETHANE	2517	2	
CHLORODIFLUORO-METHANE	1018	2	
CHLORODIFLUORO-METHANE AND CHLORO-PENTAFLUOROETHANE MIXTURE with fixed boiling point, with approximately 49% chlorodifluoromethane	1973	2	
3-Chloro-1,2-dihydroxypropane, see	2689	6.1	
Chlorodimethyl ether, see	1239	6.1	
CHLORODINITRO-BENZENES, LIQUID	1577	6.1	
CHLORODINITRO-BENZENES, SOLID	3441	6.1	
2-CHLOROETHANAL	2232	6.1	
Chloroethane, see	1037	2	
Chloroethane nitrile, see	2668	6.1	
2-Chloroethanol, see	1135	6.1	
CHLOROFORM	1888	6.1	
CHLOROFORMATES, TOXIC, CORROSIVE, N.O.S.	3277	6.1	
CHLOROFORMATES, TOXIC, CORROSIVE, FLAMMABLE, N.O.S.	2742	6.1	
Chloromethane, see	1063	2	
1-Chloro-3-methylbutane, see	1107	3	
2-Chloro-2-methylbutane, see	1107	3	
CHLOROMETHYL CHLOROFORMATE	2745	6.1	
Chloromethyl cyanide, see	2668	6.1	

Name and description	UN No.	Class	Remarks
CHLOROMETHYL ETHYL ETHER	2354	3	
Chloromethyl methyl ether, see	1239	6.1	
3-CHLORO-4-METHYL-PHENYL ISOCYANATE, LIQUID	2236	6.1	
3-CHLORO-4-METHYL-PHENYL ISOCYANATE, SOLID	3428	6.1	
3-Chloro-2-methylprop-1-ene, see	2554	3	
CHLORONITROANILINES	2237	6.1	
CHLORONITROBENZENES LIQUID	3409	6.1	
CHLORONITROBENZENES SOLID	1578	6.1	
CHLORONITROTOLUENES, LIQUID	2433	6.1	
CHLORONITROTOLUENES, SOLID	3457	6.1	
CHLOROPENTAFLUORO-ETHANE	1020	2	
CHLOROPHENOLATES, LIQUID	2904	8	
CHLOROPHENOLATES, SOLID	2905	8	
CHLOROPHENOLS, LIQUID	2021	6.1	
CHLOROPHENOLS, SOLID	2020	6.1	
CHLOROPHENYL-TRICHLOROSILANE	1753	8	
CHLOROPICRIN	1580	6.1	
CHLOROPICRIN AND METHYL BROMIDE MIXTURE, with more than 2% chloropicrin	1581	2	
CHLOROPICRIN AND METHYL CHLORIDE MIXTURE	1582	2	
CHLOROPICRIN MIXTURE, N.O.S.	1583	6.1	
CHLOROPLATINIC ACID, SOLID	2507	8	
CHLOROPRENE, STABILIZED	1991	3	
1-CHLOROPROPANE	1278	3	
2-CHLOROPROPANE	2356	3	
3-Chloro-propanediol-1,2, see	2689	6.1	
3-CHLOROPROPANOL-1	2849	6.1	
2-CHLOROPROPENE	2456	3	
3-Chloropropene, see	1100	3	
3-Chloroprop-1-ene, see	1100	3	
2-CHLOROPROPIONIC ACID	2511	8	
2-CHLOROPYRIDINE	2822	6.1	
CHLOROSILANES, CORROSIVE, N.O.S.	2987	8	
CHLOROSILANES, CORROSIVE, FLAMMABLE, N.O.S.	2986	8	
CHLOROSILANES, FLAMMABLE, CORROSIVE, N.O.S.	2985	3	
CHLOROSILANES, TOXIC, CORROSIVE, N.O.S.	3361	6.1	
CHLOROSILANES, TOXIC, CORROSIVE, FLAMMABLE, N.O.S.	3362	6.1	
CHLOROSILANES, WATER-REACTIVE, FLAMMABLE, CORROSIVE, N.O.S.	2988	4.3	
CHLOROSULPHONIC ACID (with or without sulphur trioxide)	1754	8	
1-CHLORO-1,2,2,2-TETRA-FLUOROETHANE	1021	2	
CHLOROTOLUENES	2238	3	
4-CHLORO-o-TOLUIDINE HYDROCHLORIDE, SOLID	1579	6.1	
4-CHLORO-o-TOLUIDINE HYDROCHLORIDE, SOLUTION	3410	6.1	
CHLOROTOLUIDINES LIQUID	3429	6.1	
CHLOROTOLUIDINES SOLID	3429	6.1	
1-CHLORO-2,2,2-TRIFLUORO-ETHANE	1983	2	
Chlorotrifluoroethylene, see	1082	2	
CHLOROTRIFLUORO-METHANE	1022	2	
CHLOROTRIFLUORO-METHANE AND TRIFLUOROMETHANE AZEOTROPIC MIXTURE with approximately 60% chlorotrifluoromethane	2599	2	

Name and description	UN No.	Class	Remarks
Chromic acid, solid, see	1463	5.1	
CHROMIC ACID SOLUTION	1755	8	
Chromic anhydride, solid, see	1463	5.1	
CHROMIC FLUORIDE, SOLID	1756	8	
CHROMIC FLUORIDE SOLUTION	1757	8	
Chromic nitrate, see	2720	5.1	
Chromium (VI) dichloride dioxide, see	1758	8	
Chromium (III) fluoride, solid, see	1756	8	
CHROMIUM NITRATE	2720	5.1	
Chromium (III) nitrate, see	2720	5.1	
CHROMIUM OXYCHLORIDE	1758	8	
CHROMIUM TRIOXIDE, ANHYDROUS	1463	5.1	
CHROMOSULPHURIC ACID	2240	8	
Chryosotile, see	2590	9	
Cinene, see	2052	3	
Cinnamene, see	2055	3	
Cinnamol, see	2055	3	
CLINICAL SPECIMENS	3373	6.2	
CLINICAL WASTE, UNSPECIFIED, N.O.S.	3291	6.2	
COAL GAS, COMPRESSED	1023	2	
COAL TAR DISTILLATES, FLAMMABLE	1136	3	
Coal tar naphtha, see	1268	3	
Coal tar oil, see	1136	3	
COATING SOLUTION (includes surface treatments or coatings used for industrial or other purposes such as vehicle under coating, drum or barrel lining)	1139	3	
COBALT NAPHTHENATES, POWDER	2001	4.1	
COBALT RESINATE, PRECIPITATED	1318	4.1	
Cocculus, see	3172 3462	6.1 6.1	
Collodion cottons, see	0340 0341 0342 2059 2555 2556 2557	1 1 1 3 4.1 4.1 4.1	
COMPONENTS, EXPLOSIVE TRAIN, N.O.S.	0382 0383 0384 0461	1 1 1 1	
Composition B, see	0118	1	
COMPRESSED GAS, N.O.S.	1956	2	
COMPRESSED GAS, FLAMMABLE, N.O.S.	1954	2	
COMPRESSED GAS, OXIDIZING, N.O.S.	3156	2	
COMPRESSED GAS, TOXIC, N.O.S.	1955	2	
COMPRESSED GAS, TOXIC, CORROSIVE, N.O.S.	3304	2	
COMPRESSED GAS, TOXIC, FLAMMABLE, N.O.S.	1953	2	
COMPRESSED GAS, TOXIC, FLAMMABLE, CORROSIVE, N.O.S.	3305	2	
COMPRESSED GAS, TOXIC, OXIDIZING, N.O.S.	3303	2	
COMPRESSED GAS, TOXIC, OXIDIZING, CORROSIVE, N.O.S.	3306	2	
CONTRIVANCES, WATER-ACTIVATED with burster, expelling charge or propelling charge	0248 0249	1 1	
COPPER ACETOARSENITE	1585	6.1	
COPPER ARSENITE	1586	6.1	
Copper (II) arsenite, see	1586	6.1	
COPPER BASED PESTICIDE, LIQUID, FLAMMABLE, TOXIC, flash-point less than 23 °C	2776	3	
COPPER BASED PESTICIDE, LIQUID, TOXIC	3010	6.1	
COPPER BASED PESTICIDE, LIQUID, TOXIC, FLAMMABLE, flash-point not less than 23 °C	3009	6.1	
COPPER BASED PESTICIDE, SOLID, TOXIC	2775	6.1	

Name and description	UN No.	Class	Remarks
COPPER CHLORATE	2721	5.1	
Copper (II) chlorate, see	2721	5.1	
COPPER CHLORIDE	2802	8	
COPPER CYANIDE	1587	6.1	
Copper selenate, see	2630	6.1	
Copper selenite, see	2630	6.1	
COPRA	1363	4.2	
CORD, DETONATING, flexible	0065 0289	1 1	
CORD, DETONATING, metal clad	0102 0290	1 1	
CORD, DETONATING, MILD EFFECT, metal clad	0104	1	
CORD, IGNITER	0066	1	
Cordite, see	0160 0161	1 1	
CORROSIVE LIQUID, N.O.S.	1760	8	
CORROSIVE LIQUID, ACIDIC, INORGANIC, N.O.S.	3264	8	
CORROSIVE LIQUID, ACIDIC, ORGANIC, N.O.S.	3265	8	
CORROSIVE LIQUID, BASIC, INORGANIC, N.O.S.	3266	8	
CORROSIVE LIQUID, BASIC, ORGANIC, N.O.S.	3267	8	
CORROSIVE LIQUID, FLAMMABLE, N.O.S.	2920	8	
CORROSIVE LIQUID, OXIDIZING, N.O.S.	3093	8	
CORROSIVE LIQUID, SELF-HEATING, N.O.S.	3301	8	
CORROSIVE LIQUID, TOXIC, N.O.S.	2922	8	
CORROSIVE LIQUID, WATER-REACTIVE, N.O.S.	3094	8	
CORROSIVE SOLID, N.O.S.	1759	8	
CORROSIVE SOLID, ACIDIC, INORGANIC, N.O.S.	3260	8	
CORROSIVE SOLID, ACIDIC, ORGANIC, N.O.S.	3261	8	
CORROSIVE SOLID, BASIC, INORGANIC, N.O.S.	3262	8	
CORROSIVE SOLID, BASIC, ORGANIC, N.O.S.	3263	8	
CORROSIVE SOLID, FLAMMABLE, N.O.S.	2921	8	
CORROSIVE SOLID, OXIDIZING, N.O.S.	3084	8	
CORROSIVE SOLID, SELF-HEATING, N.O.S.	3095	8	
CORROSIVE SOLID, TOXIC, N.O.S.	2923	8	
CORROSIVE SOLID, WATER-REACTIVE, N.O.S.	3096	8	
COTTON WASTE, OILY	1364	4.2	
COTTON, WET	1365	4.2	
COUMARIN DERIVATIVE PESTICIDE, LIQUID, FLAMMABLE, TOXIC, flash-point less than 23 °C	3024	3	
COUMARIN DERIVATIVE PESTICIDE, LIQUID, TOXIC	3026	6.1	
COUMARIN DERIVATIVE PESTICIDE, LIQUID, TOXIC, FLAMMABLE, flash-point not less than 23 °C	3025	6.1	
COUMARIN DERIVATIVE PESTICIDE, SOLID, TOXIC	3027	6.1	
Creosote, see	2810	6.1	
Creosote salts, see	1334	4.1	
CRESOLS, LIQUID	2076	6.1	
CRESOLS, SOLID	3455	6.1	
CRESYLIC ACID	2022	6.1	
Crocidolite, see	2212	9	
CROTONALDEHYDE, STABILIZED	1143	6.1	
CROTONIC ACID	2823	8	
Crotonic aldehyde, stabilized, see	1143	6.1	
CROTONYLENE	1144	3	
Crude naphtha, see	1268	3	
Cumene, see	1918	3	
Cupric chlorate, see	2721	5.1	
CUPRIETHYLENEDIAMINE SOLUTION	1761	8	
Cut backs, see	1999	3	
CUTTERS, CABLE, EXPLOSIVE	0070	1	
CYANIDE SOLUTION, N.O.S.	1935	6.1	
CYANIDES, INORGANIC, SOLID, N.O.S.	1588	6.1	

Name and description	UN No.	Class	Remarks
Cyanides, organic, flammable, toxic, n.o.s., see	3273	3	
Cyanides, organic, toxic, n.o.s., see	3276 3439	6.1	
Cyanides, organic, toxic, flammable, n.o.s., see	3275	6.1	
Cyanoacetonitrile, see	2647	6.1	
CYANOGEN	1026	2	
CYANOGEN BROMIDE	1889	6.1	
CYANOGEN CHLORIDE, STABILIZED	1589	2	
CYANURIC CHLORIDE	2670	8	
CYCLOBUTANE	2601	2	
CYCLOBUTYL CHLOROFORMATE	2744	6.1	
1,5,9-CYCLODODECA-TRIENE	2518	6.1	
CYCLOHEPTANE	2241	3	
CYCLOHEPTATRIENE	2603	3	
1,3,5-Cycloheptatriene, see	2603	3	
CYCLOHEPTENE	2242	3	
1,4-Cyclohexadienedione, see	2587	6.1	
CYCLOHEXANE	1145	3	
Cyclehexanethiol, see	3054	3	
CYCLOHEXANONE	1915	3	
CYCLOHEXENE	2256	3	
CYCLOHEXENYLTRI-CHLOROSILANE	1762	8	
CYCLOHEXYL ACETATE	2243	3	
CYCLOHEXYLAMINE	2357	8	
CYCLOHEXYL ISOCYANATE	2488	6.1	
CYCLOHEXYL MERCAPTAN	3054	3	
CYCLOHEXYLTRICHLORO-SILANE	1763	8	
CYCLONITE AND CYCLOTETRAMETHYLENE-TETRANITRAMINE MIXTURE, WETTED with not less than 15% water, by mass or DESENSITIZED with not less than 10% phlegmatiser by mass, see	0391	1	
CYCLONITE, DESENSITIZED, see	0483	1	
CYCLONITE, WETTED with not less than 15% water, by mass, see	0072	1	
CYCLOOCTADIENES	2520	3	
CYCLOOCTADIENE PHOSPHINES, see	2940	4.2	
CYCLOOCTATETRAENE	2358	3	
CYCLOPENTANE	1146	3	
CYCLOPENTANOL	2244	3	
CYCLOPENTANONE	2245	3	
CYCLOPENTENE	2246	3	
CYCLOPROPANE	1027	2	
CYCLOTETRAMETHYLENE-TETRANITRAMINE, DESENSITIZED	0484	1	
CYCLOTETRAMETHYLENE-TETRANITRAMINE, WETTED with not less than 15% water, by mass	0226	1	
CYCLOTRIMETHYLENE-TRINITRAMINE AND CYCLOTETRAMETHYLENE-TETRANITRAMINE MIXTURE, DESENSITIZED with not less than 10% phlegmatiser by mass	0391	1	
CYCLOTRIMETHYLENE-TRINITRAMINE AND CYCLOTETRAMETHYLENE-TETRANITRAMINE MIXTURE, WETTED with not less than 15% water, by mass	0391	1	
CYCLOTRIMETHYLENE-TRINITRAMINE, DESENSITIZED	0483	1	
CYCLOTRIMETHYLENE-TRINITRAMINE, WETTED with not less than 15% water, by mass	0072	1	
CYMENES	2046	3	
Cymol, see	2046	3	
Deanol, see	2051	8	
Dangerous goods in machinery or dangerous goods in apparatus	3363	9	Not subject to ADR [see also 1.1.3.1 (b)]
DECABORANE	1868	4.1	
DECAHYDRONAPHTHALENE	1147	3	
Decalin, see	1147	3	

Name and description	UN No.	Class	Remarks
n-DECANE	2247	3	
DEFLAGRATING METAL SALTS OF AROMATIC NITRODERIVATIVES, N.O.S.	0132	1	
Depth charge, see	0056	1	
DESENSITIZED EXPLOSIVE, LIQUID, N.O.S.	3379	3	
DESENSITIZED EXPLOSIVE, SOLID, N.O.S.	3380	4.1	
Detonating relays, see	0029 0267 0360 0361 0455 0500	1 1 1 1 1 1	
DETONATOR ASSEMBLIES, NON-ELECTRIC for blasting	0360 0361 0500	1 1 1	
DETONATORS FOR AMMUNITION	0073 0364 0365 0366	1 1 1 1	
DETONATORS, ELECTRIC for blasting	0030 0255 0456	1 1 1	
DETONATORS, NON-ELECTRIC for blasting	0029 0267 0455	1 1 1	
DEUTERIUM, COMPRESSED	1957	2	
DEVICES, SMALL, HYDROCARBON GAS POWERED with release device	3150	2	
DIACETONE ALCOHOL	1148	3	
DIAGNOSTIC SPECIMENS	3373	6.2	
DIALLYLAMINE	2359	3	
DIALLYL ETHER	2360	3	
4,4'-DIAMINODIPHENYL-METHANE	2651	6.1	
1,2-Diaminoethane, see	1604	8	
Diaminopropylamine, see	2269	8	
DI-n-AMYLAMINE	2841	3	
DIAZODINITROPHENOL, WETTED with not less than 40% water, or mixture of alcohol and water, by mass	0074	1	
Dibenzopyridine, see	2713	6.1	

Name and description	UN No.	Class	Remarks
DIBENZYLDICHLORO-SILANE	2434	8	
DIBORANE	1911	2	
1,2-DIBROMOBUTAN-3-ONE	2648	6.1	
DIBROMOCHLORO-PROPANES	2872	6.1	
1,2-Dibromo-3-chloropropane, see	2872	6.1	
DIBROMODIFLUORO-METHANE	1941	9	
DIBROMOMETHANE	2664	6.1	
DI-n-BUTYLAMINE	2248	8	
DIBUTYLAMINOETHANOL	2873	6.1	
2-Dibutylaminoethanol, see	2873	6.1	
N,N-Di-n-butylaminoethanol, see	2873	6.1	
DIBUTYL ETHERS	1149	3	
DICHLOROACETIC ACID	1764	8	
1,3-DICHLOROACETONE	2649	6.1	
DICHLOROACETYL CHLORIDE	1765	8	
DICHLOROANILINES, LIQUID	1590	6.1	
DICHLOROANILINES, SOLID	3442	6.1	
o-DICHLOROBENZENE	1591	6.1	
2,2'-DICHLORODIETHYL ETHER	1916	6.1	
DICHLORODIFLUORO-METHANE	1028	2	
DICHLORODIFLUORO-METHANE AND DIFLUOROETHANE AZEOTROPIC MIXTURE with approximately 74% dichlorodifluoromethane	2602	2	
Dichlorodifluoromethane and ethylene oxide mixture, see	3070	2	
DICHLORODIMETHYL ETHER, SYMMETRICAL	2249	6.1	Carriage prohi-bited
1,1-DICHLOROETHANE	2362	3	
1,2-Dichloroethane, see	1184	3	
1,2-DICHLOROETHYLENE	1150	3	
Di(2-chloroethyl) ether, see	1916	6.1	
DICHLOROFLUORO-METHANE	1029	2	

Name and description	UN No.	Class	Remarks
alpha-Dichlorohydrin, see	2750	6.1	
DICHLOROISOCYANURIC ACID, DRY	2465	5.1	
DICHLOROISOCYANURIC ACID SALTS	2465	5.1	
DICHLOROISOPROPYL ETHER	2490	6.1	
DICHLOROMETHANE	1593	6.1	
1,1-DICHLORO-1-NITROETHANE	2650	6.1	
DICHLOROPENTANES	1152	3	
Dichlorophenol, see	2020 2021	6.1 6.1	
DICHLOROPHENYL ISOCYANATES	2250	6.1	
DICHLOROPHENYLTRI-CHLOROSILANE	1766	8	
1,2-DICHLOROPROPANE	1279	3	
1,3-DICHLOROPROPANOL-2	2750	6.1	
1,3-Dichloro-2-propanone, see	2649	6.1	
DICHLOROPROPENES	2047	3	
DICHLOROSILANE	2189	2	
1,2-DICHLORO-1,1,2,2-TETRAFLUOROETHANE	1958	2	
Dichloro-s-triazine-2,4,6-trione, see	2465	5.1	
1,4-Dicyanobutane, see	2205	6.1	
Dicycloheptadiene, see	2251	3	
DICYCLOHEXYLAMINE	2565	8	
Dicyclohexylamine nitrite, see	2687	4.1	
DICYCLOHEXYL-AMMONIUM NITRITE	2687	4.1	
DICYCLOPENTADIENE	2048	3	
1,2-DI-(DIMETHYLAMINO) ETHANE	2372	3	
DIDYMIUM NITRATE	1465	5.1	
DIESEL FUEL	1202	3	
1,1-Diethoxyethane, see	1088	3	
1,2-Diethoxyethane, see	1153	3	
DIETHOXYMETHANE	2373	3	
3,3-DIETHOXYPROPENE	2374	3	
DIETHYLAMINE	1154	3	
2-DIETHYLAMINOETHANOL	2686	8	
3-DIETHYLAMINO-PROPYLAMINE	2684	3	
N,N-DIETHYLANILINE	2432	6.1	
DIETHYLBENZENE	2049	3	
Diethylcarbinol, see	1105	3	
DIETHYL CARBONATE	2366	3	
DIETHYLDICHLOROSILANE	1767	8	
Diethylenediamine, see	2579	8	
DIETHYLENEGLYCOL DINITRATE, DESENSITIZED with not less than 25% non-volatile, water-insoluble phlegmatizer, by mass	0075	1	
DIETHYLENETRIAMINE	2079	8	
N,N-Diethylethanolamine, see	2686	3	
DIETHYL ETHER	1155	3	
N,N-DIETHYLETHYLENE-DIAMINE	2685	8	
Di-(2-ethylhexyl) phosphoric acid, see	1902	8	
DIETHYL KETONE	1156	3	
DIETHYL SULPHATE	1594	6.1	
DIETHYL SULPHIDE	2375	3	
DIETHYLTHIOPHOSPHORYL CHLORIDE	2751	8	
DIETHYLZINC	1366	4.2	
2,4-Difluoroaniline, see	2941	6.1	
Difluorochloroethane, see	2517	2	
1,1-DIFLUOROETHANE	1030	2	
1,1-DIFLUOROETHYLENE	1959	2	
DIFLUOROMETHANE	3252	2	
Difluoromethane, pentafluoroethane, and 1,1,1,2-tetrafluoroethane zeotropic mixture with approximately 10% difluoromethane and 70% pentafluoroethane, see	3339	2	
Difluoromethane, pentafluoroethane, and 1,1,1,2-tetrafluoroethane zeotropic mixture with approximately 20% difluoromethane and 40% pentafluoroethane, see	3338	2	

Name and description	UN No.	Class	Remarks
Difluoromethane, pentafluoroethane, and 1,1,1,2-tetrafluoroethane zeotropic mixture with approximately 23%difluoromethane and 25% pentafluoroethane, see	3340	2	
DIFLUOROPHOSPHORIC ACID, ANHYDROUS	1768	8	
2,3-DIHYDROPYRAN	2376	3	
p-Dihydroxybenzene, see	2662	6.1	
DIISOBUTYLAMINE	2361	3	
DIISOBUTYLENE, ISOMERIC COMPOUNDS	2050	3	
alpha-Diisobutylene, see	2050	3	
beta-Diisobutylene, see	2050	3	
DIISOBUTYL KETONE	1157	3	
DIISOOCTYL ACID PHOSPHATE	1902	8	
DIISOPROPYLAMINE	1158	3	
DIISOPROPYL ETHER	1159	3	
DIKETENE, STABILIZED	2521	6.1	
1,1-DIMETHOXYETHANE	2377	3	
1,2-DIMETHOXYETHANE	2252	3	
Dimethoxystrychnine, see	1570	6.1	
DIMETHYLAMINE, ANHYDROUS	1032	2	
DIMETHYLAMINE AQUEOUS SOLUTION	1160	3	
2-DIMETHYLAMINO-ACETONITRILE	2378	3	
2-DIMETHYLAMINO-ETHANOL	2051	8	
2-DIMETHYLAMINOETHYL ACRYLATE	3302	6.1	
2-DIMETHYLAMINOETHYL METHACRYLATE	2522	6.1	
N,N-DIMETHYLANILINE	2253	6.1	
Dimethylarsenic acid, see	1572	6.1	
N,N-Dimethylbenzylamine, see	2619	8	
2,3-DIMETHYLBUTANE	2457	3	
1,3-DIMETHYLBUTYLAMINE	2379	3	
DIMETHYLCARBAMOYL CHLORIDE	2262	8	
DIMETHYL CARBONATE	1161	3	
DIMETHYLCYCLOHEXANES	2263	3	
N,N-DIMETHYLCYCLO-HEXYLAMINE	2264	8	
DIMETHYLDICHLORO-SILANE	1162	3	
DIMETHYLDIETHOXY-SILANE	2380	3	
DIMETHYLDIOXANES	2707	3	
DIMETHYL DISULPHIDE	2381	3	
Dimethylethanolamine, see	2051	8	
DIMETHYL ETHER	1033	2	
N,N-DIMETHYLFORMAMIDE	2265	3	
DIMETHYLHYDRAZINE, SYMMETRICAL	2382	6.1	
DIMETHYLHYDRAZINE, UNSYMMETRICAL	1163	6.1	
1,1-Dimethylhydrazine, see	1163	6.1	
N,N-Dimethyl-4-nitrosoaniline, see	1369	4.2	
2,2-DIMETHYLPROPANE	2044	2	
DIMETHYL-N-PROPYL-AMINE	2266	3	
DIMETHYL SULPHATE	1595	6.1	
DIMETHYL SULPHIDE	1164	3	
DIMETHYL THIOPHOSPHORYL CHLORIDE	2267	6.1	
DIMETHYLZINC	1370	4.2	
DINGU, see	0489	1	
DINITROANILINES	1596	6.1	
DINITROBENZENES, LIQUID	1597	6.1	
DINITROBENZENES, SOLID	3443	6.1	
Dinitrochlorobenzene, see	1577 3441	6.1 6.1	
DINITRO-o-CRESOL	1598	6.1	
DINITROGEN TETROXIDE	1067	2	
DINITROGLYCOLURIL	0489	1	
DINITROPHENOL, dry or wetted with less than 15% water, by mass	0076	1	
DINITROPHENOL SOLUTION	1599	6.1	
DINITROPHENOL, WETTED with not less than 15% water, by mass	1320	4.1	

Name and description	UN No.	Class	Remarks
DINITROPHENOLATES, alkali metals, dry or wetted with less than 15% water, by mass	0077	1	
DINITROPHENOLATES, WETTED with not less than 15% water, by mass	1321	4.1	
DINITRORESORCINOL, dry or wetted with less than 15% water, by mass	0078	1	
DINITRORESORCINOL, WETTED with not less than 15% water, by mass	1322	4.1	
DINITROSOBENZENE	0406	1	
Dinitrotoluene mixed with sodium chlorate, see	0083	1	
DINITROTOLUENES, LIQUID	2038	6.1	
DINITROTOLUENES, MOLTEN	1600	6.1	
DINITROTOLUENES, SOLID	3454	6.1	
DIOXANE	1165	3	
DIOXOLANE	1166	3	
DIPENTENE	2052	3	
DIPHENYLAMINE CHLOROARSINE	1698	6.1	
DIPHENYLCHLOROARSINE, LIQUID	1699	6.1	
DIPHENYLCHLOROARSINE, SOLID	3450	6.1	
DIPHENYLDICHLORO-SILANE	1769	8	
DIPHENYLMETHYL BROMIDE	1770	8	
DIPICRYLAMINE, see	0079	1	
DIPICRYL SULPHIDE, dry or wetted with less than 10% water, by mass	0401	1	
DIPICRYL SULPHIDE, WETTED with not less than 10% water, by mass	2852	4.1	
DIPROPYLAMINE	2383	3	
Dipropylene triamine, see	2269	8	
DI-n-PROPYL ETHER	2384	3	
DIPROPYL KETONE	2710	3	
DISINFECTANT, LIQUID, CORROSIVE, N.O.S.	1903	8	
DISINFECTANT, LIQUID, TOXIC, N.O.S.	3142	6.1	
DISINFECTANT, SOLID, TOXIC, N.O.S.	1601	6.1	
DISODIUM TRIOXOSILICATE	3253	8	
DIVINYL ETHER, STABILIZED	1167	3	
DODECYLTRICHLORO-SILANE	1771	8	
Dry ice, see	1845	9	Not subject to ADR
DYE INTERMEDIATE, LIQUID, CORROSIVE, N.O.S.	2801	8	
DYE INTERMEDIATE, LIQUID, TOXIC, N.O.S.	1602	6.1	
DYE INTERMEDIATE, SOLID, CORROSIVE, N.O.S.	3147	8	
DYE INTERMEDIATE, SOLID, TOXIC, N.O.S.	3143	6.1	
DYE, LIQUID, CORROSIVE, N.O.S.	2801	8	
DYE, LIQUID, TOXIC, N.O.S.	1602	6.1	
DYE, SOLID, CORROSIVE, N.O.S.	3147	8	
DYE, SOLID, TOXIC, N.O.S.	3143	6.1	
Dynamite, see	0081	1	
Electric storage batteries, see	2794 2795 2800 3028	8 8 8 8	
Electrolyte (acid or alkaline) for batteries, see	2796 2797	8 8	
ELEVATED TEMPERATURE LIQUID, N.O.S., at or above 100 °C and below its flash-point (including molten metals, molten salts, etc.)	3257	9	
ELEVATED TEMPERATURE LIQUID, FLAMMABLE, N.O.S. with flash-point above 61 °C, at or above its flash-point	3256	3	
ELEVATED TEMPERATURE SOLID, N.O.S., at or above 240 °C	3258	9	
Empty battery-vehicle, uncleaned			See 4.3.2.4, 5.1.3 and 5.4.1.1.6
Empty IBC, uncleaned			See 4.1.1.11, 5.1.3 and 5.4.1.1.6

Name and description	UN No.	Class	Remarks
Empty large packaging, uncleaned			See 4.1.1.11, 5.1.3 and 5.4.1.1.6
Empty MEGC, uncleaned			See 4.3.2.4, 5.1.3 and 5.4.1.1.6
Empty packaging, uncleaned			See 4.1.1.11, 5.1.3 and 5.4.1.1.6
Empty receptacle, uncleaned			See 5.1.3 and 5.4.1.1.6
Empty tank, uncleaned			See 4.3.2.4, 5.1.3 and 5.4.1.1.6
Empty vehicle, uncleaned			See 5.1.3 and 5.4.1.1.6
Engines, internal combustion	3166	9	Not subject to ADR
Engines, rocket, see	0250 0322	1 1	
ENVIRONMENTALLY HAZARDOUS SUBSTANCE, LIQUID, N.O.S.	3082	9	
ENVIRONMENTALLY HAZARDOUS SUBSTANCE, SOLID, N.O.S.	3077	9	
EPIBROMOHYDRIN	2558	6.1	
EPICHLOROHYDRIN	2023	6.1	
1,2-Epoxybutane, stabilized, see	3022	3	
Epoxyethane, see	1040	2	
1,2-EPOXY-3-ETHOXYPROPANE	2752	3	
2,3-Epoxy-1-propanal, see	2622	3	
2,3-Epoxypropyl ethyl ether, see	2752	3	
ESTERS, N.O.S.	3272	3	
ETHANE	1035	2	
ETHANE, REFRIGERATED LIQUID	1961	2	
Ethanethiol, see	2363	3	
ETHANOL	1170	3	
ETHANOL SOLUTION	1170	3	
ETHANOLAMINE	2491	8	
ETHANOLAMINE SOLUTION	2491	8	

Name and description	UN No.	Class	Remarks
Ether, see	1155	3	
ETHERS, N.O.S.	3271	3	
2-Ethoxyethanol, see	1171	3	
2-Ethoxyethyl acetate, see	1172	3	
Ethoxy propane-1, see	2615	3	
ETHYL ACETATE	1173	3	
ETHYLACETYLENE, STABILIZED	2452	2	
ETHYL ACRYLATE, STABILIZED	1917	3	
ETHYL ALCOHOL, see	1170	3	
ETHYL ALCOHOL SOLUTION, see	1170	3	
ETHYLAMINE	1036	2	
ETHYLAMINE, AQUEOUS SOLUTION with not less than 50% but not more than 70% ethylamine	2270	3	
ETHYL AMYL KETONE	2271	3	
N-ETHYLANILINE	2272	6.1	
2-ETHYLANILINE	2273	6.1	
ETHYLBENZENE	1175	3	
N-ETHYL-N-BENZYL-ANILINE	2274	6.1	
N-ETHYLBENZYL-TOLUIDINES, LIQUID	2753	6.1	
N-ETHYLBENZYL-TOLUIDINES, SOLID	3460	6.1	
ETHYL BORATE	1176	3	
ETHYL BROMIDE	1891	6.1	
ETHYL BROMOACETATE	1603	6.1	
2-ETHYLBUTANOL	2275	3	
2-ETHYLBUTYL ACETATE	1177	3	
ETHYL BUTYL ETHER	1179	3	
2-ETHYLBUTYRALDEHYDE	1178	3	
ETHYL BUTYRATE	1180	3	
ETHYL CHLORIDE	1037	2	
ETHYL CHLOROACETATE	1181	6.1	
Ethyl chlorocarbonate, see	1182	6.1	
ETHYL CHLOROFORMATE	1182	6.1	
ETHYL 2-CHLORO-PROPIONATE	2935	3	
Ethyl-alpha-chloropropionate, see	2935	3	

Name and description	UN No.	Class	Remarks
ETHYL CHLORO-THIOFORMATE	2826	8	
ETHYL CROTONATE	1862	3	
ETHYLDICHLOROARSINE	1892	6.1	
ETHYLDICHLOROSILANE	1183	4.3	
ETHYLENE, ACETYLENE AND PROPYLENE MIXTURE, REFRIGERATED LIQUID containing at least 71.5% ethylene with not more than 22.5% acetylene and not more than 6% propylene	3138	2	
ETHYLENE CHLOROHYDRIN	1135	6.1	
ETHYLENE	1962	2	
ETHYLENEDIAMINE	1604	8	
ETHYLENE DIBROMIDE	1605	6.1	
Ethylene dibromide and methyl bromide, liquid mixture, see	1647	6.1	
ETHYLENE DICHLORIDE	1184	3	
ETHYLENE GLYCOL DIETHYL ETHER	1153	3	
ETHYLENE GLYCOL MONOETHYL ETHER	1171	3	
ETHYLENE GLYCOL MONOETHYL ETHER ACETATE	1172	3	
ETHYLENE GLYCOL MONOMETHYL ETHER	1188	3	
ETHYLENE GLYCOL MONOMETHYL ETHER ACETATE	1189	3	
ETHYLENEIMINE, STABILIZED	1185	6.1	
ETHYLENE OXIDE	1040	2	
ETHYLENE OXIDE AND CARBON DIOXIDE MIXTURE with more than 87% ethylene oxide	3300	2	
ETHYLENE OXIDE AND CARBON DIOXIDE MIXTURE with more than 9% but not more than 87% ethylene oxide	1041	2	
ETHYLENE OXIDE AND CARBON DIOXIDE MIXTURE with not more than 9% ethylene oxide	1952	2	
ETHYLENE OXIDE AND CHLOROTETRAFLUORO-ETHANE MIXTURE with not more than 8.8% ethylene oxide	3297	2	
ETHYLENE OXIDE AND DICHLORODIFLUORO-METHANE MIXTURE with not more than 12.5% ethylene oxide	3070	2	
ETHYLENE OXIDE AND PENTAFLUOROETHANE MIXTURE with not more than 7.9% ethylene oxide	3298	2	
ETHYLENE OXIDE AND PROPYLENE OXIDE MIXTURE, not more than 30% ethylene oxide	2983	3	
ETHYLENE OXIDE AND TETRAFLUOROETHANE MIXTURE with not more than 5.6% ethylene oxide	3299	2	
ETHYLENE OXIDE WITH NITROGEN up to a total pressure of 1 MPa (10 bar) at 50 °C	1040	2	
ETHYLENE, REFRIGERATED LIQUID	1038	2	
ETHYL ETHER, see	1155	3	
ETHYL FLUORIDE	2453	2	
ETHYL FORMATE	1190	3	
2-ETHYLHEXYLAMINE	2276	3	
2-ETHYLHEXYL CHLOROFORMATE	2748	6.1	
Ethylidene chloride, see	2362	3	
ETHYL ISOBUTYRATE	2385	3	
ETHYL ISOCYANATE	2481	3	
ETHYL LACTATE	1192	3	
ETHYL MERCAPTAN	2363	3	
ETHYL METHACRYLATE, STABILIZED	2277	3	
ETHYL METHYL ETHER	1039	2	
ETHYL METHYL KETONE	1193	3	
ETHYL NITRITE SOLUTION	1194	3	
ETHYL ORTHOFORMATE	2524	3	
ETHYL OXALATE	2525	6.1	
ETHYLPHENYL-DICHLOROSILANE	2435	8	

Name and description	UN No.	Class	Remarks
1-ETHYLPIPERIDINE	2386	3	
ETHYL PROPIONATE	1195	3	
ETHYL PROPYL ETHER	2615	3	
Ethyl silicate, see	1292	3	
Ethyl sulphate, see	1594	6.1	
N-ETHYLTOLUIDINES	2754	6.1	
ETHYLTRICHLOROSILANE	1196	3	
EXPLOSIVE, BLASTING, TYPE A	0081	1	
EXPLOSIVE, BLASTING, TYPE B	0082 0331	1 1	
EXPLOSIVE, BLASTING, TYPE C	0083	1	
EXPLOSIVE, BLASTING, TYPE D	0084	1	
EXPLOSIVE, BLASTING, TYPE E	0241 0332	1 1	
Explosives, emulsion, see	0241 0332	1 1	
Explosive, seismic, see	0081 0082 0083 0331	1 1 1 1	
Explosive, slurry, see	0241 0332	1 1	
Explosive, water gel, see	0241 0332	1 1	
EXTRACTS, AROMATIC, LIQUID	1169	3	
EXTRACTS, FLAVOURING, LIQUID	1197	3	
FABRICS, ANIMAL, N.O.S. with oil	1373	4.2	
FABRICS IMPREGNATED WITH WEAKLY NITRATED NITROCELLULOSE, N.O.S.	1353	4.1	
FABRICS, SYNTHETIC, N.O.S. with oil	1373	4.2	
FABRICS, VEGETABLE, N.O.S. with oil	1373	4.2	
FERRIC ARSENATE	1606	6.1	
FERRIC ARSENITE	1607	6.1	
FERRIC CHLORIDE, ANHYDROUS	1773	8	
FERRIC CHLORIDE SOLUTION	2582	8	

Name and description	UN No.	Class	Remarks
FERRIC NITRATE	1466	5.1	
FERROCERIUM	1323	4.1	
FERROSILICON with 30% or more but less than 90% silicon	1408	4.3	
FERROUS ARSENATE	1608	6.1	
FERROUS METAL BORINGS in a form liable to self-heating	2793	4.2	
FERROUS METAL CUTTINGS in a form liable to self-heating	2793	4.2	
FERROUS METAL SHAVINGS in a form liable to self-heating	2793	4.2	
FERROUS METAL TURNINGS in a form liable to self-heating	2793	4.2	
FERTILIZER AMMONIATING SOLUTION with free ammonia	1043	2	
Fertilizer with ammonium nitrate, n.o.s., see	2067	5.1	
Fibres, animal, burnt wet or damp	1372	4.2	Not subject to ADR
FIBRES, ANIMAL, N.O.S. with oil	1373	4.2	
FIBRES IMPREGNATED WITH WEAKLY NITRATED NITROCELLULOSE, N.O.S.	1353	4.1	
FIBRES, SYNTHETIC, N.O.S. with oil	1373	4.2	
Fibres, vegetable, burnt wet or damp	1372	4.2	Not subject to ADR
Fibres, vegetable, dry	3360	4.1	Not subject to ADR
FIBRES, VEGETABLE, N.O.S. with oil	1373	4.2	
Films, nitrocellulose base, from which gelatine has been removed; film scrap, see	2002	4.2	
FILMS, NITROCELLULOSE BASE, gelatin coated, except scrap	1324	4.1	
FIRE EXTINGUISHER CHARGES, corrosive liquid	1774	8	
Fire extinguisher charges, expelling, explosive, see	0275 0276 0323 0381	1 1 1 1	
FIRE EXTINGUISHERS with compressed or liquefied gas	1044	2	

Name and description	UN No.	Class	Remarks
FIRELIGHTERS, SOLID with flammable liquid	2623	4.1	
FIREWORKS	0333	1	
	0334	1	
	0335	1	
	0336	1	
	0337	1	
FIRST AID KIT	3316	9	
Fischer Tropsch gas, see	2600	2	
Fish meal, stabilized	2216	9	Not subject to ADR
FISH MEAL, UNSTABILIZED	1374	4.2	
Fish scrap, stabilized, see	2216	9	Not subject to ADR
FISH SCRAP, UNSTABILIZED, see	1374	4.2	
Flammable gas in lighters, see	1057	2	
FLAMMABLE LIQUID, N.O.S.	1993	3	
FLAMMABLE LIQUID, CORROSIVE, N.O.S.	2924	3	
FLAMMABLE LIQUID, TOXIC, N.O.S.	1992	3	
FLAMMABLE LIQUID, TOXIC, CORROSIVE, N.O.S.	3286	3	
FLAMMABLE SOLID, CORROSIVE, INORGANIC, N.O.S.	3180	4.1	
FLAMMABLE SOLID, CORROSIVE, ORGANIC, N.O.S.	2925	4.1	
FLAMMABLE SOLID, INORGANIC, N.O.S.	3178	4.1	
FLAMMABLE SOLID, ORGANIC, N.O.S.	1325	4.1	
FLAMMABLE SOLID, ORGANIC, MOLTEN, N.O.S.	3176	4.1	
FLAMMABLE SOLID, OXIDIZING, N.O.S.	3097	4.1	Carriage prohi-bited
FLAMMABLE SOLID, TOXIC, INORGANIC, N.O.S.	3179	4.1	
FLAMMABLE SOLID, TOXIC, ORGANIC, N.O.S.	2926	4.1	

Name and description	UN No.	Class	Remarks
FLARES, AERIAL	0093	1	
	0403	1	
	0404	1	
	0420	1	
	0421	1	
Flares, aeroplane, see	0093	1	
	0403	1	
	0404	1	
	0420	1	
	0421	1	
Flares, highway, Flares, distress, small, Flares, railway or highway, see	0191	1	
	0373	1	
FLARES, SURFACE	0092	1	
	0418	1	
	0419	1	
Flares, water-activated, see	0248	1	
	0249	1	
FLASH POWDER	0094	1	
	0305	1	
Flue dusts, toxic, see	1562	6.1	
Fluoric acid, see	1790	8	
FLUORINE, COMPRESSED	1045	2	
FLUOROACETIC ACID	2642	6.1	
FLUOROANILINES	2941	6.1	
2-Fluoroaniline, see	2941	6.1	
4-Fluoroaniline, see	2941	6.1	
o-Fluoroaniline, see	2941	6.1	
p-Fluoroaniline, see	2941	6.1	
FLUOROBENZENE	2387	3	
FLUOROBORIC ACID	1775	8	
Fluoroethane, see	2453	2	
Fluoroform, see	1984	2	
Fluoromethane, see	2454	2	
FLUOROPHOSPHORIC ACID, ANHYDROUS	1776	8	
FLUOROSILICATES, N.O.S.	2856	6.1	
FLUOROSILICIC ACID	1778	8	
FLUOROSULPHONIC ACID	1777	8	
FLUOROTOLUENES	2388	3	
FORMALDEHYDE SOLUTION with not less than 25% formaldehyde	2209	8	
FORMALDEHYDE SOLUTION, FLAMMABLE	1198	3	

Name and description	UN No.	Class	Remarks
Formalin, see	1198 2209	3 8	
Formamidine sulphinic acid, see	3341	4.2	
FORMIC ACID	1779	8	
Formic aldehyde, see	1198 2209	3 8	
2-Formyl-3,4-dihydro-2H-pyran, see	2607	3	
FRACTURING DEVICES, EXPLOSIVE without detonator, for oil wells	0099	1	
FUEL, AVIATION, TURBINE ENGINE	1863	3	
Fumaroyl dichloride, see	1780	3	
FUMARYL CHLORIDE	1780	8	
FUMIGATED UNIT	3359	9	
FURALDEHYDES	1199	6.1	
FURAN	2389	3	
FURFURYL ALCOHOL	2874	6.1	
FURFURYLAMINE	2526	3	
Furyl carbinol, see	2874	6.1	
FUSE, DETONATING, metal clad	0102 0290	1 1	
FUSE, DETONATING, MILD EFFECT, metal clad	0104	1	
FUSE, IGNITER, tubular, metal clad	0103	1	
FUSE, NON-DETONATING	0101	1	
FUSEL OIL	1201	3	
FUSE, SAFETY	0105	1	
Fuze, combination, percussion or time, see	0106 0107 0257 0316 0317 0367 0368	1 1 1 1 1 1 1	
FUZES, DETONATING	0106 0107 0257 0367	1 1 1 1	
FUZES, DETONATING with protective features	0408 0409 0410	1 1 1	
FUZES, IGNITING	0316 0317 0368	1 1 1	

Name and description	UN No.	Class	Remarks
GALLIUM	2803	8	
GAS CARTRIDGES without a release device, non-refillable, see	2037	2	
Gas drips, hydrocarbon, see	3295	3	
GAS OIL	1202	3	
GASOLINE	1203	3	
Gasoline, casinghead, see	1203	3	
GAS, REFRIGERATED LIQUID, N.O.S.	3158	2	
GAS, REFRIGERATED LIQUID, FLAMMABLE, N.O.S.	3312	2	
GAS, REFRIGERATED LIQUID, OXIDIZING, N.O.S.	3311	2	
GAS SAMPLE, NON-PRESSURIZED, FLAMMABLE, N.O.S., not refrigerated liquid	3167	2	
GAS SAMPLE, NON-PRESSURIZED, TOXIC, N.O.S., not refrigerated liquid	3169	2	
GAS SAMPLE, NON-PRESSURIZED, TOXIC, FLAMMABLE, N.O.S., not refrigerated liquid	3168	2	
Gelatin, blasting, see	0081	1	
Gelatin, dynamites, see	0081	1	
GENETICALLY MODIFIED MICRO-ORGANISMS	3245	9	
GERMANE	2192	2	
Germanium hydride, see	2192	2	
Glycer-1,3-dichlorohydrin, see	2750	6.1	
GLYCEROL alpha-MONOCHLOROHYDRIN	2689	6.1	
Glyceryl trinitrate, see	0143 0144 1204 3064	1 1 3 3	
GLYCIDALDEHYDE	2622	3	
GRENADES, hand or rifle, with bursting charge	0284 0285 0292 0293	1 1 1 1	
Grenades, illuminating, see	0171 0254 0297	1 1 1	

Name and description	UN No.	Class	Remarks
GRENADES, PRACTICE, hand or rifle	0110	1	
	0318	1	
	0372	1	
	0452	1	
Grenades, smoke, see	0015	1	
	0016	1	
	0245	1	
	0246	1	
	0303	1	
GUANIDINE NITRATE	1467	5.1	
GUANYLNITROSAMINO-GUANYLIDENE HYDRAZINE, WETTED with not less than 30% water, by mass	0113	1	
GUANYLNITROSAMINO-GUANYLTETRAZENE, WETTED with not less than 30% water, or mixture of alcohol and water, by mass	0114	1	
GUNPOWDER, COMPRESSED, see	0028	1	
GUNPOWDER, granular or as a meal, see	0027	1	
GUNPOWDER, IN PELLETS, see	0028	1	
Gutta percha solution, see	1287	3	
HAFNIUM POWDER, DRY	2545	4.2	
HAFNIUM POWDER, WETTED with not less than 25% water	1326	4.1	
Hay	1327	4.1	Not subject to ADR
HEATING OIL, LIGHT	1202	3	
Heavy hydrogen, see	1957	2	
HELIUM, COMPRESSED	1046	2	
HELIUM, REFRIGERATED LIQUID	1963	2	
HEPTAFLUOROPROPANE	3296	2	
n-HEPTALDEHYDE	3056	3	
n-Heptanal, see	3056	3	
HEPTANES	1206	3	
4-Heptanone, see	2710	3	
n-HEPTENE	2278	3	
HEXACHLOROACETONE	2661	6.1	
HEXACHLOROBENZENE	2729	6.1	

Name and description	UN No.	Class	Remarks
HEXACHLOROBUTADIENE	2279	6.1	
Hexachloro-1,3-butadiene, see	2279	6.1	
HEXACHLOROCYCLO-PENTADIENE	2646	6.1	
HEXACHLOROPHENE	2875	6.1	
Hexachloro-2-propanone, see	2661	6.1	
HEXADECYLTRICHLORO-SILANE	1781	8	
HEXADIENES	2458	3	
HEXAETHYL TETRAPHOSPHATE	1611	6.1	
HEXAETHYL TETRAPHOSPHATE AND COMPRESSED GAS MIXTURE	1612	2	
HEXAFLUOROACETONE	2420	2	
HEXAFLUOROACETONE HYDRATE, LIQUID	2552	6.1	
HEXAFLUOROACETONE HYDRATE, SOLID	3436	6.1	
HEXAFLUOROETHANE	2193	2	
HEXAFLUOROPHOSPHORIC ACID	1782	8	
HEXAFLUOROPROPYLENE	1858	2	
Hexahydrocresol, see	2617	3	
Hexahydromethyl phenol, see	2617	3	
HEXALDEHYDE	1207	3	
HEXAMETHYLENEDIAMINE, SOLID	2280	8	
HEXAMETHYLENEDIAMINE SOLUTION	1783	8	
HEXAMETHYLENE DIISOCYANATE	2281	6.1	
HEXAMETHYLENEIMINE	2493	3	
HEXAMETHYLENE-TETRAMINE	1328	4.1	
Hexamine, see	1328	4.1	
HEXANES	1208	3	
HEXANITRODIPHENYL-AMINE	0079	1	
HEXANITROSTILBENE	0392	1	
Hexanoic acid, see	2829	8	
HEXANOLS	2282	3	
1-HEXENE	2370	3	

Name and description	UN No.	Class	Remarks
HEXOGEN AND CYCLOTETRAMETHYLENE-TETRANITRAMINE MIXTURE, WETTED with not less than 15% water, by mass or DESENSITIZED with not less than 10% phlegmatiser by mass, see	0391	1	
HEXOGEN, DESENSITIZED, see	0483	1	
HEXOGEN, WETTED with not less than 15% water, by mass, see	0072	1	
HEXOLITE, dry or wetted with less than 15% water, by mass	0118	1	
HEXOTOL, dry or wetted with less than 15% water, by mass, see	0118	1	
HEXOTONAL	0393	1	
HEXOTONAL, cast, see	0393	1	
HEXYL, see	0079	1	
HEXYLTRICHLOROSILANE	1784	8	
HMX, see	0391	1	
HMX, DESENSITIZED, see	0484	1	
HMX, WETTED with not less than 15% water, by mass, see	0226	1	
HYDRAZINE, ANHYDROUS	2029	8	
HYDRAZINE AQUEOUS SOLUTION, with more than 37% hydrazine by mass	2030	8	
HYDRAZINE, AQUEOUS SOLUTION with not more than 37% hydrazine, by mass	3293	6.1	
Hydrides, metal, water-reactive, n.o.s., see	1409	4.3	
Hydriodic acid, anhydrous, see	2197	2	
HYDRIODIC ACID	1787	8	
HYDROBROMIC ACID	1788	8	
HYDROCARBON GAS MIXTURE, COMPRESSED, N.O.S.	1964	2	
HYDROCARBON GAS MIXTURE, LIQUEFIED, N.O.S. such as mixtures A, A01, A02, A0, A1, B1, B2, B or C	1965	2	
HYDROCARBON GAS REFILLS FOR SMALL DEVICES with release device	3150	2	
HYDROCARBONS, LIQUID, N.O.S.	3295	3	
HYDROCHLORIC ACID	1789	8	
HYDROCYANIC ACID, AQUEOUS SOLUTION with not more than 20% hydrogen cyanide	1613	6.1	
HYDROFLUORIC ACID with more than 60% but not more than 85% hydrogen fluoride	1790	8	
HYDROFLUORIC ACID with more than 85% hydrogen fluoride	1790	8	
HYDROFLUORIC ACID with not more than 60% hydrogen fluoride	1790	8	
HYDROFLUORIC ACID AND SULPHURIC ACID MIXTURE	1786	8	
Hydrofluoroboric acid, see	1775	8	
Hydrofluorosilicic acid, see	1778	8	
HYDROGEN AND METHANE MIXTURE, COMPRESSED	2034	2	
Hydrogen arsenide, see	2188	2	
HYDROGEN BROMIDE, ANHYDROUS	1048	2	
Hydrogen bromide solution, see	1788	8	
HYDROGEN CHLORIDE, ANHYDROUS	1050	2	
HYDROGEN CHLORIDE, REFRIGERATED LIQUID	2186	2	Carriage prohi-bited
HYDROGEN, COMPRESSED	1049	2	
HYDROGEN CYANIDE, AQUEOUS SOLUTION with not more than 20% hydrogen cyanide, see	1613	6.1	
HYDROGEN CYANIDE, SOLUTION IN ALCOHOL with not more than 45% hydrogen cyanide	3294	6.1	
HYDROGEN CYANIDE, STABILIZED containing less than 3% water	1051	6.1	
HYDROGEN CYANIDE, STABILIZED, containing less than 3% water and absorbed in a porous inert material	1614	6.1	
HYDROGENDIFLUORIDES, N.O.S.	1740	8	

Name and description	UN No.	Class	Remarks
HYDROGEN FLUORIDE, ANHYDROUS	1052	8	
Hydrogen fluoride solution, see	1790	8	
HYDROGEN IN A METAL HYDRIDE STORAGE SYSTEM	2	3468	
HYDROGEN IODIDE, ANHYDROUS	2197	2	
Hydrogen iodide solution, see	1787	8	
HYDROGEN PEROXIDE AND PEROXYACETIC ACID MIXTURE with acid(s), water and not more than 5% peroxyacetic acid, STABILIZED	3149	5.1	
HYDROGEN PEROXIDE, AQUEOUS SOLUTION with not less than 8% but less than 20% hydrogen peroxide (stabilized as necessary)	2984	5.1	
HYDROGEN PEROXIDE, AQUEOUS SOLUTION with not less than 20% but not more than 60% hydrogen peroxide (stabilized as necessary)	2014	5.1	
HYDROGEN PEROXIDE, AQUEOUS SOLUTION, STABILIZED with more than 60% hydrogen peroxide and not more than 70% hydrogen peroxide	2015	5.1	
HYDROGEN PEROXIDE, AQUEOUS SOLUTION, STABILIZED with more than 70% hydrogen peroxide	2015	5.1	
HYDROGEN, REFRIGERATED LIQUID	1966	2	
HYDROGEN SELENIDE, ANHYDROUS	2202	2	
Hydrogen silicide, see	2203	2	
HYDROGEN SULPHIDE	1053	2	
Hydroquinol, see	2662	6.1	
HYDROQUINONE, SOLID	2662	6.1	
HYDROQUINONE, SOLUTION	3435	6.1	
Hydroselenic acid, see	2202	2	
Hydrosilicofluoric acid, see	1778	8	
3-Hydroxybutan-2-one, see	2621	3	
HYDROXYLAMINE SULPHATE	2865	8	
1-Hydroxy-3-methyl-2-penten-4-yne, see	2705	8	
3-Hydroxyphenol, see	2876	6.1	
HYPOCHLORITES, INORGANIC, N.O.S.	3212	5.1	
HYPOCHLORITE SOLUTION	1791	8	
IGNITERS	0121 0314 0315 0325 0454	1 1 1 1 1	
3,3'-IMINO-DIPROPYLAMINE	2269	8	
Indiarubber, see	1287	3	
INFECTIOUS SUBSTANCE, AFFECTING ANIMALS only	2900	6.2	
INFECTIOUS SUBSTANCE, AFFECTING HUMANS	2814	6.2	
Ink, printer's, flammable, see	1210	3	
INSECTICIDE GAS, N.O.S.	1968	2	
INSECTICIDE GAS, FLAMMABLE, N.O.S.	3354	2	
INSECTICIDE GAS, TOXIC, N.O.S.	1967	2	
INSECTICIDE GAS, TOXIC, FLAMMABLE, N.O.S.	3355	2	
IODINE MONOCHLORIDE	1792	8	
IODINE PENTAFLUORIDE	2495	5.1	
2-IODOBUTANE	2390	3	
Iodomethane, see	2644	6.1	
IODOMETHYLPROPANES	2391	3	
IODOPROPANES	2392	3	
alpha-Iodotoluene, see	2653	6.1	
I.p.d.i., see	2290	6.1	
Iron chloride, anhydrous, see	1773	8	
Iron (III) chloride, anhydrous, see	1773	8	
Iron chloride solution, see	2582	8	
IRON OXIDE, SPENT obtained from coal gas purification	1376	4.2	
IRON PENTACARBONYL	1994	6.1	
Iron perchloride, anhydrous, see	1773	8	
Iron powder, pyrophoric, see	1383	4.2	

Name and description	UN No.	Class	Remarks
Iron sesquichloride, anhydrous, see	1773	8	
IRON SPONGE, SPENT obtained from coal gas purification	1376	4.2	
Iron swarf, see	2793	4.2	
ISOBUTANE	1969	2	
ISOBUTANOL	1212	3	
Isobutene, see	1055	2	
ISOBUTYL ACETATE	1213	3	
ISOBUTYL ACRYLATE, STABILIZED	2527	3	
ISOBUTYL ALCOHOL, see	1212	3	
ISOBUTYL ALDEHYDE, see	2045	3	
ISOBUTYLAMINE	1214	3	
ISOBUTYLENE	1055	2	
ISOBUTYL FORMATE	2393	3	
ISOBUTYL ISOBUTYRATE	2528	3	
ISOBUTYL ISOCYANATE	2486	3	
ISOBUTYL METHACRYLATE, STABILIZED	2283	3	
ISOBUTYL PROPIONATE	2394	3	
ISOBUTYRALDEHYDE	2045	3	
ISOBUTYRIC ACID	2529	3	
ISOBUTYRONITRILE	2284	3	
ISOBUTYRYL CHLORIDE	2395	3	
ISOCYANATES, FLAMMABLE, TOXIC, N.O.S.	2478	3	
ISOCYANATES, TOXIC, N.O.S.	2206	6.1	
ISOCYANATES, TOXIC, FLAMMABLE, N.O.S.	3080	6.1	
ISOCYANATE SOLUTION, FLAMMABLE, TOXIC, N.O.S.	2478	3	
ISOCYANATE SOLUTION, TOXIC, N.O.S.	2206	6.1	
ISOCYANATE SOLUTION, TOXIC, FLAMMABLE, N.O.S.	3080	6.1	
ISOCYANATO-BENZOTRIFLUORIDES	2285	6.1	
3-Isocyanatomethyl-3,5,5-tri-methylcyclohexyl isocyanate, see	2290	6.1	
Isododecane, see	2286	3	
ISOHEPTENE	2287	3	
ISOHEXENE	2288	3	
Isooctane, see	1262	3	
ISOOCTENE	1216	3	
Isopentane, see	1265	3	
ISOPENTENES	2371	3	
Isopentylamine, see	1106	3	
Isopentyl nitrite, see	1113	3	
ISOPHORONEDIAMINE	2289	8	
ISOPHORONE DIISOCYANATE	2290	6.1	
ISOPRENE, STABILIZED	1218	3	
ISOPROPANOL	1219	3	
ISOPROPENYL ACETATE	2403	3	
ISOPROPENYLBENZENE	2303	3	
ISOPROPYL ACETATE	1220	3	
ISOPROPYL ACID PHOSPHATE	1793	8	
ISOPROPYL ALCOHOL, see	1219	3	
ISOPROPYLAMINE	1221	3	
ISOPROPYLBENZENE	1918	3	
ISOPROPYL BUTYRATE	2405	3	
Isopropyl chloride, see	2356	3	
ISOPROPYL CHLOROACETATE	2947	3	
ISOPROPYL CHLOROFORMATE	2407	6.1	
ISOPROPYL 2-CHLORO-PROPIONATE	2934	3	
Isopropyl-alpha-chloropropionate, see	2934	3	
Isopropyl ether, see	1159	3	
Isopropylethylene, see	2561	3	
Isopropyl formate, see	1281	3	
ISOPROPYL ISOBUTYRATE	2406	3	
ISOPROPYL ISOCYANATE	2483	3	
Isopropyl mercaptan, see	2402	3	
ISOPROPYL NITRATE	1222	3	
ISOPROPYL PROPIONATE	2409	3	
Isolpropyltoluene, see	2046	3	
Isopropyltoluol, see	2046	3	

Name and description	UN No.	Class	Remarks
ISOSORBIDE DINITRATE MIXTURE with not less than 60% lactose, mannose, starch or calcium hydrogen phosphate	2907	4.1	
ISOSORBIDE-5-MONONITRATE	3251	4.1	
Isovaleraldehyde, see	2058	3	
JET PERFORATING GUNS, CHARGED, oil well, without detonator	0124 0494	1 1	
Jet tappers, without detonator, see	0059	1	
KEROSENE	1223	3	
KETONES, LIQUID, N.O.S.	1224	3	
KRYPTON, COMPRESSED	1056	2	
KRYPTON, REFRIGERATED LIQUID	1970	2	
Lacquer base or lacquer chips, nitrocellulose, dry, see	2557	4.1	
Lacquer base or lacquer chips, plastic, wet with alcohol or solvent, see	1263 2059 2555 2556	3 3 4.1 4.1	
LEAD ACETATE	1616	6.1	
Lead (II) acetate, see	1616	6.1	
LEAD ARSENATES	1617	6.1	
LEAD ARSENITES	1618	6.1	
LEAD AZIDE, WETTED with not less than 20% water, or mixture of alcohol and water, by mass	0129	1	
Lead chloride, solid, see	2291	6.1	
LEAD COMPOUND, SOLUBLE, N.O.S.	2291	6.1	
LEAD CYANIDE	1620	6.1	
Lead (II) cyanide	1620	6.1	
LEAD DIOXIDE	1872	5.1	
LEAD NITRATE	1469	5.1	
Lead (II) nitrate	1469	5.1	
LEAD PERCHLORATE, SOLID	1470	5.1	
LEAD PERCHLORATE, SOLUTION	3408	5.1	
Lead (II) perchlorate	1470 3408	5.1 5.1	
Lead peroxide, see	1872	5.1	
LEAD PHOSPHITE, DIBASIC	2989	4.1	
LEAD STYPHNATE, WETTED with not less than 20% water, or mixture of alcohol and water, by mass	0130	1	
LEAD SULPHATE with more than 3% free acid	1794	8	
Lead tetraethyl, see	1649	6.1	
Lead tetramethyl, see	1649	6.1	
LEAD TRINITRO-RESORCINATE, WETTED with not less than 20% water, or mixture of alcohol and water, by mass, see	0130	1	
LIFE-SAVING APPLIANCES NOT SELF-INFLATING containing dangerous goods as equipment	3072	9	
LIFE-SAVING APPLIANCES, SELF-INFLATING	2990	9	
LIGHTER REFILLS containing flammable gas	1057	2	
LIGHTERS containing flammable gas	1057	2	
LIGHTERS, FUSE	0131	1	
Limonene, inactive, see	2052	3	
LIQUEFIED GAS, N.O.S.	3163	2	
LIQUEFIED GAS, FLAMMABLE, N.O.S.	3161	2	
LIQUEFIED GASES, non-flammable, charged with nitrogen, carbon dioxide or air	1058	2	
LIQUEFIED GAS, OXIDIZING, N.O.S.	3157	2	
LIQUEFIED GAS, TOXIC, N.O.S.	3162	2	
LIQUEFIED GAS, TOXIC, CORROSIVE, N.O.S.	3308	2	
LIQUEFIED GAS, TOXIC, FLAMMABLE, N.O.S.	3160	2	
LIQUEFIED GAS, TOXIC, FLAMMABLE, CORROSIVE, N.O.S.	3309	2	
LIQUEFIED GAS, TOXIC, OXIDIZING, N.O.S.	3307	2	
LIQUEFIED GAS, TOXIC, OXIDIZING, CORROSIVE, N.O.S.	3310	2	
Liquefied petroleum gas, see	1075	2	

Name and description	UN No.	Class	Remarks
LITHIUM	1415	4.3	
LITHIUM ALKYLS, LIQUID	2445	4.2	
LITHIUM ALKYLS, SOLID	3433	4.2	
LITHIUM ALUMINIUM HYDRIDE	1410	4.3	
LITHIUM ALUMINIUM HYDRIDE, ETHEREAL	1411	4.3	
LITHIUM BATTERIES	3090	9	
LITHIUM BATTERIES CONTAINED IN EQUIPMENT	3091	9	
LITHIUM BATTERIES PACKED WITH EQUIPMENT	3091	9	
LITHIUM BOROHYDRIDE	1413	4.3	
LITHIUM FERROSILICON	2830	4.3	
LITHIUM HYDRIDE	1414	4.3	
LITHIUM HYDRIDE, FUSED SOLID	2805	4.3	
LITHIUM HYDROXIDE	2680	8	
LITHIUM HYDROXIDE SOLUTION	2679	8	
LITHIUM HYPOCHLORITE, DRY	1471	5.1	
LITHIUM HYPOCHLORITE MIXTURE	1471	5.1	
Lithium in cartouches, see	1415	4.3	
LITHIUM NITRATE	2722	5.1	
LITHIUM NITRIDE	2806	4.3	
LITHIUM PEROXIDE	1472	5.1	
Lithium silicide, see	1417	4.3	
LITHIUM SILICON	1417	4.3	
L.n.g., see	1972	2	
LONDON PURPLE	1621	6.1	
L.p.g., see	1075	2	
Lye, see	1823	8	
Lythene, see	1268	3	
MAGNESIUM in pellets, turnings or ribbons	1869	4.1	
MAGNESIUM ALKYLS	3053	4.2	
MAGNESIUM ALLOYS with more than 50% magnesium in pellets, turnings or ribbons	1869	4.1	
MAGNESIUM ALLOYS POWDER	1418	4.3	
MAGNESIUM ALUMINIUM PHOSPHIDE	1419	4.3	
MAGNESIUM ARSENATE	1622	6.1	
Magnesium bisulphite solution, see	2693	8	
MAGNESIUM BROMATE	1473	5.1	
MAGNESIUM CHLORATE	2723	5.1	
Magnesium chloride and chlorate mixture, see	1459 3407	5.1 5.1	
MAGNESIUM DIAMIDE	2004	4.2	
MAGNESIUM DIPHENYL	2005	4.2	
MAGNESIUM FLUORO-SILICATE	2853	6.1	
MAGNESIUM GRANULES, COATED, particle size not less than 149 microns	2950	4.3	
MAGNESIUM HYDRIDE	2010	4.3	
MAGNESIUM NITRATE	1474	5.1	
MAGNESIUM PERCHLORATE	1475	5.1	
MAGNESIUM PEROXIDE	1476	5.1	
MAGNESIUM PHOSPHIDE	2011	4.3	
MAGNESIUM POWDER	1418	4.3	
Magnesium scrap, see	1869	4.1	
MAGNESIUM SILICIDE	2624	4.3	
Magnesium silicofluoride, see	2853	6.1	
Magnetized material	2807	9	Not subject to ADR
MALEIC ANHYDRIDE	2215	8	
MALEIC ANHYDRIDE, MOLTEN	2215	8	
Malonic dinitrile, see	2647	6.1	
Malonodinitrile, see	2647	6.1	
MALONONITRILE	2647	6.1	
MANEB	2210	4.2	
MANEB PREPARATION with not less than 60% maneb	2210	4.2	
MANEB PREPARATION, STABILIZED against self-heating	2968	4.3	
MANEB, STABILIZED against self-heating	2968	4.3	
Manganese ethylene-di-dithiocarbamate, see	2210	4.2	

Name and description	UN No.	Class	Remarks
Manganese ethylene-1,2-dithiocarbamate, see	2210	4.2	
MANGANESE NITRATE	2724	5.1	
Manganese (II) nitrate, see	2724	5.1	
MANGANESE RESINATE	1330	4.1	
Manganous nitrate, see	2724	5.1	
MANNITOL HEXANITRATE, WETTED with not less than 40% water, or mixture of alcohol and water, by mass	0133	1	
MATCHES, FUSEE	2254	4.1	
MATCHES, SAFETY (book, card or strike on box)	1944	4.1	
MATCHES, "STRIKE ANYWHERE"	1331	4.1	
MATCHES, WAX "VESTA"	1945	4.1	
MEDICAL WASTE, N.O.S.	3291	6.2	
MEDICINE, LIQUID, FLAMMABLE, TOXIC, N.O.S.	3248	3	
MEDICINE, LIQUID, TOXIC, N.O.S.	1851	6.1	
MEDICINE, SOLID, TOXIC, N.O.S.	3249	6.1	
p-Mentha-1,8-diene, see	2052	8	
MERCAPTANS, LIQUID, FLAMMABLE, N.O.S.	3336	3	
MERCAPTANS, LIQUID, FLAMMABLE, TOXIC, N.O.S.	1228	3	
MERCAPTANS, LIQUID, TOXIC, FLAMMABLE, N.O.S.	3071	6.1	
MERCAPTAN MIXTURE, LIQUID, FLAMMABLE, N.O.S.	3336	3	
MERCAPTAN MIXTURE, LIQUID, FLAMMABLE, TOXIC, N.O.S.	1228	3	
MERCAPTAN MIXTURE, LIQUID, TOXIC, FLAMMABLE, N.O.S.	3071	6.1	
2-Mercaptoethanol, see	2966	6.1	
2-Mercaptopropionic acid, see	2936	6.1	
5-MERCAPTOTETRAZOL-1-ACETIC ACID	0448	1	
MERCURIC ARSENATE	1623	6.1	
MERCURIC CHLORIDE	1624	6.1	
MERCURIC NITRATE	1625	6.1	
MERCURIC POTASSIUM CYANIDE	1626	6.1	
Mercuric sulphate, see	1645	6.1	
Mercurol, see	1639	6.1	
Mercurous bisulphate, see	1645	6.1	
MERCUROUS NITRATE	1627	6.1	
Mercurous sulphate, see	1645	6.1	
MERCURY	2809	8	
MERCURY ACETATE	1629	6.1	
MERCURY AMMONIUM CHLORIDE	1630	6.1	
MERCURY BASED PESTICIDE, LIQUID, FLAMMABLE, TOXIC, flash-point less than 23 °C	2778	3	
MERCURY BASED PESTICIDE, LIQUID, TOXIC	3012	6.1	
MERCURY BASED PESTICIDE, LIQUID, TOXIC, FLAMMABLE, flash-point not less than 23 °C	3011	6.1	
MERCURY BASED PESTICIDE, SOLID, TOXIC	2777	6.1	
MERCURY BENZOATE	1631	6.1	
Mercury bichloride, see	1624	6.1	
MERCURY BROMIDES	1634	6.1	
MERCURY COMPOUND, LIQUID, N.O.S.	2024	6.1	
MERCURY COMPOUND, SOLID, N.O.S.	2025	6.1	
MERCURY CYANIDE	1636	6.1	
MERCURY FULMINATE, WETTED with not less than 20% water, or mixture of alcohol and water, by mass	0135	1	
MERCURY GLUCONATE	1637	6.1	
MERCURY IODIDE	1638	6.1	
MERCURY NUCLEATE	1639	6.1	
MERCURY OLEATE	1640	6.1	
MERCURY OXIDE	1641	6.1	
MERCURY OXYCYANIDE, DESENSITIZED	1642	6.1	
MERCURY POTASSIUM IODIDE	1643	6.1	
MERCURY SALICYLATE	1644	6.1	

Name and description	UN No.	Class	Remarks
MERCURY SULPHATE	1645	6.1	
MERCURY THIOCYANATE	1646	6.1	
Mesitylene, see	2325	3	
MESITYL OXIDE	1229	3	
METAL CARBONYLS, LIQUID, N.O.S.	3281	6.1	
METAL CARBONYLS, SOLID, N.O.S.	3466	6.1	
METAL CATALYST, DRY	2881	4.2	
METAL CATALYST, WETTED with a visible excess of liquid	1378	4.2	
METALDEHYDE	1332	4.1	
METAL HYDRIDES, FLAMMABLE, N.O.S.	3182	4.1	
METAL HYDRIDES, WATER-REACTIVE, N.O.S.	1409	4.3	
METALLIC SUBSTANCE, WATER-REACTIVE, N.O.S.	3208	4.3	
METALLIC SUBSTANCE, WATER-REACTIVE, SELF-HEATING, N.O.S.	3209	4.3	
METAL POWDER, FLAMMABLE, N.O.S.	3089	4.1	
METAL POWDER, SELF-HEATING, N.O.S.	3189	4.2	
METAL SALTS OF ORGANIC COMPOUNDS, FLAMMABLE, N.O.S.	3181	4.1	
METHACRYLALDEHYDE, STABILIZED	2396	3	
METHACRYLIC ACID, STABILIZED	2531	8	
METHACRYLONITRILE, STABILIZED	3079	3	
METHALLYL ALCOHOL	2614	3	
Methanal, see	1198 2209	3 8	
Methane and hydrogen mixture, see	2034	2	
METHANE, COMPRESSED	1971	2	
METHANE, REFRIGERATED LIQUID	1972	2	
METHANESULPHONYL CHLORIDE	3246	6.1	
METHANOL	1230	3	
2-Methoxyethyl acetate, see	1189	3	

Name and description	UN No.	Class	Remarks
METHOXYMETHYL ISOCYANATE	2605	3	
4-METHOXY-4-METHYLPENTAN-2-ONE	2293	3	
1-Methoxy-2-nitrobenzene, see	2730 3458	6.1 6.1	
1-Methoxy-3-nitrobenzene, see	2730 3458	6.1 6.1	
1-Methoxy-4-nitrobenzene, see	2730 3458	6.1 6.1	
1-METHOXY-2-PROPANOL	3092	3	
METHYL ACETATE	1231	3	
METHYLACETYLENE AND PROPADIENE MIXTURE, STABILIZED such as mixture P1 or mixture P2	1060	2	
beta-Methyl acrolein, see	1143	6.1	
METHYL ACRYLATE, STABILIZED	1919	3	
METHYLAL	1234	3	
Methyl alcohol, see	1230	3	
Methyl allyl alcohol, see	2614	3	
METHYLALLYL CHLORIDE	2554	3	
METHYLAMINE, ANHYDROUS	1061	2	
METHYLAMINE, AQUEOUS SOLUTION	1235	3	
METHYLAMYL ACETATE	1233	3	
Methyl amyl alcohol, see	2053	3	
Methyl amyl ketone, see	1110	3	
N-METHYLANILINE	2294	6.1	
Methylated spirit, see	1986 1987	3 3	
alpha-METHYLBENZYL ALCOHOL, LIQUID	2937	6.1	
alpha-METHYLBENZYL ALCOHOL, SOLID	3438	6.1	
METHYL BROMIDE with not more than 2% chloropicrin	1062	2	
Methyl bromide and chloropicrin mixture, with more than 2% chloropicrin, see	1581	2	
METHYL BROMIDE AND ETHYLENE DIBROMIDE MIXTURE, LIQUID	1647	6.1	
METHYL BROMOACETATE	2643	6.1	

Name and description	UN No.	Class	Remarks
2-METHYLBUTANAL	3371	3	
3-METHYLBUTAN-2-ONE	2397	3	
2-METHYL-1-BUTENE	2459	3	
2-METHYL-2-BUTENE	2460	3	
3-METHYL-1-BUTENE	2561	3	
N-METHYLBUTYLAMINE	2945	3	
METHYL tert-BUTYL ETHER	2398	3	
METHYL BUTYRATE	1237	3	
METHYL CHLORIDE	1063	2	
Methyl chloride and chloropicrin mixture, see	1582	2	
METHYL CHLORIDE AND METHYLENE CHLORIDE MIXTURE	1912	2	
METHYL CHLOROACETATE	2295	6.1	
Methyl chlorocarbonate, see	1238	6.1	
Methyl chloroform, see	2831	6.1	
METHYL CHLOROFORMATE	1238	6.1	
METHYL CHLOROMETHYL ETHER	1239	6.1	
METHYL 2-CHLORO-PROPIONATE	2933	3	
Methyl alpha-chloropropionate, see	2933	3	
METHYLCHLOROSILANE	2534	2	
Methyl cyanide, see	1648	3	
METHYLCYCLOHEXANE	2296	3	
METHYLCYCLOHEXANOLS, flammable	2617	3	
METHYLCYCLOHEXANONE	2297	3	
METHYLCYCLOPENTANE	2298	3	
METHYL DICHLORO-ACETATE	2299	6.1	
METHYLDICHLOROSILANE	1242	4.3	
Methylene bromide, see	2664	6.1	
Methylene chloride, see	1593	6.1	
Methylene chloride and methyl chloride mixture, see	1912	2	
Methylene cyanide, see	2647	6.1	
p,p'-Methylene dianiline, see	2651	6.1	
Methylene dibromide, see	2664	6.1	
2,2'-Methylene-di-(3,4,6-trichlorophenol), see	2875	6.1	

Name and description	UN No.	Class	Remarks
Methyl ethyl ether, see	1039	2	
METHYL ETHYL KETONE, see	1193	3	
2-METHYL-5-ETHYLPYRIDINE	2300	6.1	
METHYL FLUORIDE	2454	2	
METHYL FORMATE	1243	3	
2-METHYLFURAN	2301	3	
Methyl glycol, see	1188	3	
Methyl glycol acetate, see	1189	3	
2-METHYL-2-HEPTANE-THIOL	3023	6.1	
5-METHYLHEXAN-2-ONE	2302	3	
METHYLHYDRAZINE	1244	6.1	
METHYL IODIDE	2644	6.1	
METHYL ISOBUTYL CARBINOL	2053	3	
METHYL ISOBUTYL KETONE	1245	3	
METHYL ISOCYANATE	2480	6.1	
METHYL ISOPROPENYL KETONE, STABILIZED	1246	3	
METHYL ISOTHIOCYANATE	2477	6.1	
METHYL ISOVALERATE	2400	3	
METHYL MAGNESIUM BROMIDE IN ETHYL ETHER	1928	4.3	
METHYL MERCAPTAN	1064	2	
Methyl mercapto-propionaldehyde, see	2785	6.1	
METHYL METHACRYLATE MONOMER, STABILIZED	1247	3	
4-METHYLMORPHOLINE	2535	3	
N-METHYLMORPHOLINE, see	2535	3	
METHYL NITRITE	2455	2	Carriage prohi-bited
METHYL ORTHOSILICATE	2606	6.1	
METHYLPENTADIENE	2461	3	
Methylpentanes, see	1208	3	
2-METHYLPENTAN-2-OL	2560	3	
4-Methylpentan-2-ol, see	2053	3	
3-Methyl-2-penten-4ynol, see	2705	8	
METHYLPHENYL-DICHLOROSILANE	2437	8	

Name and description	UN No.	Class	Remarks
2-Methyl-2-phenylpropane, see	2709	3	
1-METHYLPIPERIDINE	2399	3	
METHYL PROPIONATE	1248	3	
Methylpropylbenzene, see	2046	3	
METHYL PROPYL ETHER	2612	3	
METHYL PROPYL KETONE	1249	3	
Methyl pyridines, see	2313	3	
Methylstyrene, inhibited, see	2618	3	
alpha-Methylstyrene, see	2303	3	
Methyl sulphate, see	1595	6.1	
Methyl sulphide, see	1164	3	
METHYLTETRAHYDRO-FURAN	2536	3	
METHYL TRICHLORO-ACETATE	2533	6.1	
METHYLTRICHLOROSILANE	1250	3	
alpha-METHYLVALERAL-DEHYDE	2367	3	
Methyl vinyl benzene, inhibited, see	2618	3	
METHYL VINYL KETONE, STABILIZED	1251	6.1	
M.i.b.c., see	2053	3	
MINES with bursting charge	0136	1	
	0137	1	
	0138	1	
	0294	1	
Mirbane oil, see	1662	6.1	
Missiles, guided, see	0180	1	
	0181	1	
	0182	1	
	0183	1	
	0295	1	
	0397	1	
	0398	1	
	0436	1	
	0437	1	
	0438	1	
Mixtures A, A01, A02, A0, A1, B1, B2, B or C, see	1965	2	
Mixture F1, mixture F2 or mixture F3, see	1078	2	
MIXTURES OF 1,3-BUTADIENE AND HYDROCARBONS, STABILIZED, having a vapour pressure at 70 °C not exceeding 1.1 MPa (11 bar) and a density at 50 °C not lower than 0.525 kg/l	1010	2	
Mixture P1 or mixture P2, see	1060	2	
MOLYBDENUM PENTACHLORIDE	2508	8	
Monochloroacetic acid, see	1750	6.1	
	1751	6.1	
Monochlorobenzene, see	1134	3	
Monochlorodifluoromethane, see	1018	2	
Monochlorodifluoromethane and monochloropentafluoroethane mixture, see	1973	2	
Monochlorodifluoromonobromo-methane, see	1974	2	
Monochloropentafluoroethane and monochlorodifluoromethane mixture, see	1973	2	
Monoethylamine, see	1036	2	
MONONITROTOLUIDINES, see	2660	6.1	
Monopropylamine, see	1277	3	
MORPHOLINE	2054	8	
MOTOR FUEL ANTI-KNOCK MIXTURE	1649	6.1	
MOTOR SPIRIT	1203	3	
Muriatic acid, see	1789	8	
MUSK XYLENE, see	2956	4.1	
Mysorite, see	2212	9	
Naphta, see	1268	3	
Naphta, petroleum, see	1268	3	
Naphta, solvent, see	1268	3	
NAPHTHALENE, CRUDE	1334	4.1	
NAPHTHALENE, MOLTEN	2304	4.1	
NAPHTHALENE, REFINED	1334	4.1	
alpha-NAPHTHYLAMINE	2077	6.1	
beta-NAPHTHYLAMINE, SOLID	1650	6.1	
beta-NAPHTHYLAMINE, SOLUTION	3411	6.1	
NAPHTHYLTHIOUREA	1651	6.1	

Name and description	UN No.	Class	Remarks
1-Naphthylthiourea, see	1651	6.1	
NAPHTHYLUREA	1652	6.1	
NATURAL GAS, COMPRESSED with high methane content	1971	2	
NATURAL GAS, REFRIGERATED LIQUID with high methane content	1972	2	
Natural gasoline, see	1203	3	
Neohexane, see	1208	3	
NEON, COMPRESSED	1065	2	
NEON, REFRIGERATED LIQUID	1913	2	
Neothyl, see	2612	3	
NICKEL CARBONYL	1259	6.1	
NICKEL CYANIDE	1653	6.1	
Nickel (II) cyanide, see	1653	6.1	
NICKEL NITRATE	2725	5.1	
Nickel (II) nitrate, see	2725	5.1	
NICKEL NITRITE	2726	5.1	
Nickel (II) nitrite, see	2726	5.1	
Nickelous nitrate, see	2725	5.1	
Nickelous nitrite, see	2726	5.1	
Nickel tetracarbonyl, see	1259	6.1	
NICOTINE	1654	6.1	
NICOTINE COMPOUND, LIQUID, N.O.S	3144	6.1	
NICOTINE COMPOUND, SOLID, N.O.S.	1655	6.1	
NICOTINE HYDROCHLORIDE, LIQUID	1656	6.1	
NICOTINE HYDROCHLORIDE, SOLID	3444	6.1	
NICOTINE HYDROCHLORIDE, SOLUTION	1656	6.1	
NICOTINE PREPARATION, LIQUID, N.O.S.	3144	6.1	
NICOTINE PREPARATION, SOLID, N.O.S.	1655	6.1	
NICOTINE SALICYLATE	1657	6.1	
NICOTINE SULPHATE, SOLID	3445	6.1	
NICOTINE SULPHATE, SOLUTION	1658	6.1	
NICOTINE TARTRATE	1659	6.1	

Name and description	UN No.	Class	Remarks
NITRATES, INORGANIC, N.O.S.	1477	5.1	
NITRATES, INORGANIC, AQUEOUS SOLUTION, N.O.S.	3218	5.1	
NITRATING ACID MIXTURE with more than 50% nitric acid	1796	8	
NITRATING ACID MIXTURE with not more than 50% nitric acid	1796	8	
NITRATING ACID MIXTURE, SPENT, with more than 50% nitric acid	1826	8	
NITRATING ACID MIXTURE, SPENT, with not more than 50% nitric acid	1826	8	
NITRIC ACID, other than red fuming, with more than 70% nitric acid	2031	8	
NITRIC ACID, other than red fuming, with not more than 70% nitric acid	2031	8	
NITRIC ACID, RED FUMING	2032	8	
NITRIC OXIDE, COMPRESSED	1660	2	
NITRIC OXIDE AND DINITROGEN TETROXIDE MIXTURE	1975	2	
NITRIC OXIDE AND NITROGEN DIOXIDE MIXTURE, see	1975	2	
NITRILES, FLAMMABLE, TOXIC, N.O.S.	3273	3	
NITRILES, TOXIC, LIQUID, N.O.S.	3276	6.1	
NITRILES, TOXIC, SOLID, N.O.S.	3439	6.1	
NITRILES, TOXIC, FLAMMABLE, N.O.S.	3275	6.1	
NITRITES, INORGANIC, N.O.S.	2627	5.1	
NITRITES, INORGANIC, AQUEOUS SOLUTION, N.O.S.	3219	5.1	
NITROANILINES (o-, m-, p-)	1661	6.1	
NITROANISOLES, LIQUID	2730	6.1	
NITROANISOLES, SOLID	3458	6.1	
NITROBENZENE	1662	6.1	

Name and description	UN No.	Class	Remarks
Nitrobenzene bromide, see	2732	6.1	
NITROBENZENESULPHONIC ACID	2305	8	
Nitrobenzol, see	1662	6.1	
5-NITROBENZOTRIAZOL	0385	1	
NITROBENZO-TRIFLUORIDES, LIQUID	2306	6.1	
NITROBENZOTRIFLUO-RIDES, SOLID	3431	6.1	
NITROBROMOBENZENES, LIQUID	2732	6.1	
NITROBROMOBENZENES, SOLID	3459	6.1	
NITROCELLULOSE, dry or wetted with less than 25% water (or alcohol), by mass	0340	1	
NITROCELLULOSE, unmodified or plasticized with less than 18% plasticizing substance, by mass	0341	1	
NITROCELLULOSE MEMBRANE FILTERS, with not more than 12.6% nitrogen, by dry mass	3270	4.1	
NITROCELLULOSE, with not more than 12.6% nitrogen, by dry mass, MIXTURE WITH PLASTICIZER, WITH PIGMENT	2557	4.1	
NITROCELLULOSE, with not more than 12.6% nitrogen, by dry mass, MIXTURE WITH PLASTICIZER, WITHOUT PIGMENT	2557	4.1	
NITROCELLULOSE, with not more than 12.6% nitrogen, by dry mass, MIXTURE WITHOUT PLASTICIZER, WITH PIGMENT	2557	4.1	
NITROCELLULOSE, with not more than 12.6% nitrogen, by dry mass, MIXTURE WITHOUT PLASTICIZER, WITHOUT PIGMENT	2557	4.1	
NITROCELLULOSE, PLASTICIZED with not less than 18% plasticizing substance, by mass	0343	1	
NITROCELLULOSE SOLUTION, FLAMMABLE with not more than 12.6% nitrogen, by dry mass, and not more than 55% nitrocellulose	2059	3	
NITROCELLULOSE, WETTED with not less than 25% alcohol, by mass	0342	1	
NITROCELLULOSE WITH ALCOHOL (not less than 25% alcohol, by mass, and not more than 12.6% nitrogen, by dry mass)	2556	4.1	
NITROCELLULOSE WITH WATER (not less than 25% water, by mass)	2555	4.1	
Nitrochlorobenzenes, see	1578 3409	6.1	
3-NITRO-4-CHLOROBENZO-TRIFLUORIDE	2307	6.1	
NITROCRESOLS, LIQUID	3434	6.1	
NITROCRESOLS, SOLID	2446	6.1	
NITROETHANE	2842	3	
NITROGEN, COMPRESSED	1066	2	
NITROGEN DIOXIDE, see	1067	2	
Nitrogen mixture with rare gases, see	1981	2	
NITROGEN, REFRIGERATED LIQUID	1977	2	
NITROGEN TRIFLUORIDE	2451	2	
NITROGEN TRIOXIDE	2421	2	Carriage prohi-bited
NITROGLYCERIN, DESENSITIZED with not less than 40% non-volatile water-insoluble phlegmatizer, by mass	0143	1	
NITROGLYCERIN MIXTURE, DESENSITIZED, LIQUID, N.O.S. with not more than 30% nitroglycerin, by mass	3357	3	
NITROGLYCERIN MIXTURE, DESENSITIZED, LIQUID, FLAMMABLE, N.O.S. with not more than 30% nitroglycerin, by mass	3343	3	

Name and description	UN No.	Class	Remarks
NITROGLYCERIN MIXTURE, DESENSITIZED, SOLID, N.O.S. with more than 2% but not more than 10% nitroglycerin, by mass	3319	4.1	
NITROGLYCERIN, SOLUTION IN ALCOHOL with more than 1% but not more than 5% nitroglycerin	3064	3	
NITROGLYCERIN SOLUTION IN ALCOHOL with more than 1% but not more than 10% nitroglycerin	0144	1	
NITROGLYCERIN SOLUTION IN ALCOHOL with not more than 1% nitroglycerin	1204	3	
NITROGUANIDINE, dry or wetted with less than 20% water, by mass	0282	1	
NITROGUANIDINE, WETTED with not less than 20% water, by mass	1336	4.1	
NITROHYDROCHLORIC ACID	1798	8	Carriage prohi-bited
NITROMANNITE, WETTED, see	0133	1	
NITROMETHANE	1261	3	
Nitromuriatic acid, see	1798	8	
NITRONAPHTHALENE	2538	4.1	
NITROPHENOLS (o-, m-, p-)	1663	6.1	
4-NITROPHENYL-HYDRAZINE, with not less than 30% water, by mass	3376	4.1	
NITROPROPANES	2608	3	
p-NITROSODIMETHYL-ANILINE	1369	4.2	
NITROSTARCH, dry or wetted with less than 20% water, by mass	0146	1	
NITROSTARCH, WETTED with not less than 20% water, by mass	1337	4.1	
NITROSYL CHLORIDE	1069	2	
NITROSYLSULPHURIC ACID, LIQUID	2308	8	
NITROSYLSULPHURIC ACID, SOLID	3456	8	
NITROTOLUENES, LIQUID	1664	6.1	
NITROTOLUENES, SOLID	3446	6.1	
NITROTOLUIDINES	2660	6.1	
NITROTRIAZOLONE	0490	1	
NITRO UREA	0147	1	
NITROUS OXIDE	1070	2	
Nitrous oxide and carbon dioxide mixture, see	1015	2	
NITROUS OXIDE, REFRIGERATED LIQUID	2201	2	
NITROXYLENES, LIQUID	1665	6.1	
NITROXYLENES, SOLID	3447	6.1	
Non-activated carbon, see	1361	4.2	
Non-activated charcoal, see	1361	4.2	
NONANES	1920	3	
NONYLTRICHLOROSILANE	1799	8	
2,5-NORBORNADIENE, STABILIZED, see	2251	3	
Normal propyl alcohol, see	1274	3	
NTO, see	0490	1	
OCTADECYLTRICHLORO-SILANE	1800	8	
OCTADIENE	2309	3	
OCTAFLUOROBUT-2-ENE	2422	2	
OCTAFLUOROCYCLO-BUTANE	1976	2	
OCTAFLUOROPROPANE	2424	2	
OCTANES	1262	3	
OCTOGEN, see	0226 0391 0484	1 1 1	
OCTOL, dry or wetted with less than 15% water, by mass, see	0266	1	
OCTOLITE, dry or wetted with less than 15% water, by mass	0266	1	
OCTONAL	0496	1	
OCTYL ALDEHYDES	1191	3	
tert-Octyl mercaptan, see	3023	6.1	
OCTYLTRICHLOROSILANE	1801	8	
Oenanthol, see	3056	3	
OIL GAS, COMPRESSED	1071	2	
Oleum, see	1831	8	
ORGANIC PEROXIDE TYPE B, LIQUID	3101	5.2	

Name and description	UN No.	Class	Remarks
ORGANIC PEROXIDE TYPE B, LIQUID, TEMPERATURE CONTROLLED	3111	5.2	
ORGANIC PEROXIDE TYPE B, SOLID	3102	5.2	
ORGANIC PEROXIDE TYPE B, SOLID, TEMPERATURE CONTROLLED	3112	5.2	
ORGANIC PEROXIDE TYPE C, LIQUID	3103	5.2	
ORGANIC PEROXIDE TYPE C, LIQUID, TEMPERATURE CONTROLLED	3113	5.2	
ORGANIC PEROXIDE TYPE C, SOLID	3104	5.2	
ORGANIC PEROXIDE TYPE C, SOLID, TEMPERATURE CONTROLLED	3114	5.2	
ORGANIC PEROXIDE TYPE D, LIQUID	3105	5.2	
ORGANIC PEROXIDE TYPE D, LIQUID, TEMPERATURE CONTROLLED	3115	5.2	
ORGANIC PEROXIDE TYPE D, SOLID	3106	5.2	
ORGANIC PEROXIDE TYPE D, SOLID, TEMPERATURE CONTROLLED	3116	5.2	
ORGANIC PEROXIDE TYPE E, LIQUID	3107	5.2	
ORGANIC PEROXIDE TYPE E, LIQUID, TEMPERATURE CONTROLLED	3117	5.2	
ORGANIC PEROXIDE TYPE E, SOLID	3108	5.2	
ORGANIC PEROXIDE TYPE E, SOLID, TEMPERATURE CONTROLLED	3118	5.2	
ORGANIC PEROXIDE TYPE F, LIQUID	3109	5.2	
ORGANIC PEROXIDE TYPE F, LIQUID, TEMPERATURE CONTROLLED	3119	5.2	
ORGANIC PEROXIDE TYPE F, SOLID	3110	5.2	
ORGANIC PEROXIDE TYPE F, SOLID, TEMPERATURE CONTROLLED	3120	5.2	
Organic peroxides, see 2.2.52.4 for an alphabetic list of currently assigned organic peroxides and see	3101 to 3120	5.2	
ORGANIC PIGMENTS, SELF-HEATING	3313	4.2	
ORGANOARSENIC COMPOUND, LIQUID, N.O.S.	3280	6.1	
ORGANOARSENIC COMPOUND, SOLID, N.O.S.	3465	6.1	
ORGANOCHLORINE PESTICIDE, LIQUID, FLAMMABLE, TOXIC, flash-point less than 23 °C	2762	3	
ORGANOCHLORINE PESTICIDE, LIQUID, TOXIC	2996	6.1	
ORGANOCHLORINE PESTICIDE, LIQUID, TOXIC, FLAMMABLE, flash-point not less than 23 °C	2995	6.1	
ORGANOCHLORINE PESTICIDE, SOLID, TOXIC	2761	6.1	
ORGANOMETALLIC COMPOUND, TOXIC, LIQUID, N.O.S.,	3282	6.1	
ORGANOMETALLIC COMPOUND, TOXIC, SOLID, N.O.S.,	3467	6.1	
ORGANOMETALLIC SUBSTANCE, LIQUID, PYROPHORIC	3392	4.2	
ORGANOMETALLIC SUBSTANCE, SOLID, PYROPHORIC	3391	4.2	
ORGANOMETALLIC SUBSTANCE, SOLID, SELF-HEATING	3400	4.2	
ORGANOMETALLIC SUBSTANCE, LIQUID, PYROPHORIC, WATER-REACTIVE	3394	4.2	
ORGANOMETALLIC SUBSTANCE, SOLID, PYROPHORIC, WATER-REACTIVE	3393	4.2	

Name and description	UN No.	Class	Remarks
ORGANOMETALLIC SUBSTANCE, LIQUID, WATER-REACTIVE	3398	4.3	
ORGANOMETALLIC SUBSTANCE, SOLID, WATER-REACTIVE	3395	4.3	
ORGANOMETALLIC SUBSTANCE, LIQUID, WATER-REACTIVE, FLAMMABLE	3399	4.3	
ORGANOMETALLIC SUBSTANCE, SOLID, WATER-REACTIVE, FLAMMABLE	3396	4.3	
ORGANOMETALLIC SUBSTANCE, SOLID, WATER-REACTIVE, SELF-HEATING	3397	4.3	
ORGANOPHOSPHORUS COMPOUND, TOXIC, LIQUID, N.O.S.	3278	6.1	
ORGANOPHOSPHORUS COMPOUND, TOXIC, SOLID N.O.S.	3464	6.1	
ORGANOPHOSPHORUS COMPOUND, TOXIC, FLAMMABLE, N.O.S.	3279	6.1	
ORGANOPHOSPHORUS PESTICIDE, LIQUID, FLAMMABLE, TOXIC, flash-point less than 23 °C	2784	3	
ORGANOPHOSPHORUS PESTICIDE, LIQUID, TOXIC	3018	6.1	
ORGANOPHOSPHORUS PESTICIDE, LIQUID, TOXIC, FLAMMABLE, flash-point not less than 23 °C	3017	6.1	
ORGANOPHOSPHORUS PESTICIDE, SOLID, TOXIC	2783	6.1	
ORGANOTIN COMPOUND, LIQUID, N.O.S.	2788	6.1	
ORGANOTIN COMPOUND, SOLID, N.O.S.	3146	6.1	
ORGANOTIN PESTICIDE, LIQUID, FLAMMABLE, TOXIC, flash-point less than 23 °C	2787	3	
ORGANOTIN PESTICIDE, LIQUID, TOXIC	3020	6.1	
ORGANOTIN PESTICIDE, LIQUID, TOXIC, FLAMMABLE, flash-point not less than 23 °C	3019	6.1	
ORGANOTIN PESTICIDE, SOLID, TOXIC	2786	6.1	
Orthophospohoric acid, see	1805	8	
OSMIUM TETROXIDE	2471	6.1	
OXIDIZING LIQUID, N.O.S.	3139	5.1	
OXIDIZING LIQUID, CORROSIVE, N.O.S.	3098	5.1	
OXIDIZING LIQUID, TOXIC, N.O.S.	3099	5.1	
OXIDIZING SOLID, N.O.S.	1479	5.1	
OXIDIZING SOLID, CORROSIVE, N.O.S.	3085	5.1	
OXIDIZING SOLID, FLAMMABLE, N.O.S.	3137	5.1	Carriage prohi-bited
OXIDIZING SOLID, SELF-HEATING, N.O.S.	3100	5.1	Carriage prohi-bited
OXIDIZING SOLID, TOXIC, N.O.S.	3087	5.1	
OXIDIZING SOLID, WATER-REACTIVE, N.O.S.	3121	5.1	Carriage prohi-bited
Oxirane, see	1040	2	
Oxygen and carbon dioxide mixture, see	1014	2	
OXYGEN, COMPRESSED	1072	2	
OXYGEN DIFLUORIDE, COMPRESSED	2190	2	
OXYGEN GENERATOR, CHEMICAL	3356	5.1	
Oxygen, mixture with rare gases, see	1980	2	
OXYGEN, REFRIGERATED LIQUID	1073	2	
1-Oxy-4-nitrobenzene, see	1663	6.1	
PAINT (including paint, lacquer, enamel, stain, shellac, varnish, polish, liquid filler and liquid lacquer base)	1263 3066	3 8	
PAINT RELATED MATERIAL (including paint thinning and reducing compound)	1263 3066	3 8	
PAPER, UNSATURATED OIL TREATED, incompletely dried (including carbon paper)	1379	4.2	
Paraffin, see	1223	3	

Name and description	UN No.	Class	Remarks
PARAFORMALDEHYDE	2213	4.1	
PARALDEHYDE	1264	3	
PCBs, see	2315 3432	9 9	
PENTABORANE	1380	4.2	
PENTACHLOROETHANE	1669	6.1	
PENTACHLOROPHENOL	3155	6.1	
PENTAERYTHRITE TETRANITRATE with not less than 7% wax, by mass	0411	1	
PENTAERYTHRITE TETRANITRATE, DESENSITIZED with not less than 15% phlegmatizer, by mass	0150	1	
PENTAERYTHRITE TETRANITRATE MIXTURE, DESENSITIZED, SOLID, N.O.S. with more than 10% but not more than 20% PETN, by mass	3344	4.1	
PENTAERYTHRITE TETRANITRATE, WETTED with not less than 25% water, by mass	0150	1	
PENTAERYTHRITOL TETRANITRATE, see	0150 0411	1 1	
PENTAFLUOROETHANE	3220	2	
Pentafluoroethane, 1,1,1-trifluoroethane, and 1,1,1,2-tetrafluoroethane zeotropic mixture with approximately 44% pentafluoroethane and 52% 1,1,1-trifluoroethane, see	3337	2	
PENTAMETHYLHEPTANE	2286	3	
Pentanal, see	2058	3	
PENTANE-2,4-DIONE	2310	3	
PENTANES, liquid	1265	3	
n-Pentane, see	1265	3	
PENTANOLS	1105	3	
3-Pentanol, see	1105	3	
1-PENTENE	1108	3	
1-PENTOL	2705	8	
PENTOLITE, dry or wetted with less than 15% water, by mass	0151	1	
Pentyl nitrite, see	1113	3	
PERCHLORATES, INORGANIC, N.O.S.	1481	5.1	
PERCHLORATES, INORGANIC, AQUEOUS SOLUTION, N.O.S.	3211	5.1	
PERCHLORIC ACID with more than 50% but not more than 72% acid, by mass	1873	5.1	
PERCHLORIC ACID with not more than 50% acid, by mass	1802	8	
Perchlorobenzene, see	2729	6.1	
Perchlorocyclopentadiene, see	2646	6.1	
Perchloroethylene, see	1897	6.1	
PERCHLOROMETHYL MERCAPTAN	1670	6.1	
PERCHLORYL FLUORIDE	3083	2	
Perfluoroacetylchloride, see	3057	2	
PERFLUORO (ETHYL VINYL ETHER)	3154	2	
PERFLUORO (METHYL VINYL ETHER)	3153	2	
Perfluoropropane, see	2424	2	
PERFUMERY PRODUCTS with flammable solvents	1266	3	
PERMANGANATES, INORGANIC, N.O.S.	1482	5.1	
PERMANGANATES, INORGANIC, AQUEOUS SOLUTION, N.O.S.	3214	5.1	
PEROXIDES, INORGANIC, N.O.S.	1483	5.1	
PERSULPHATES, INORGANIC, N.O.S.	3215	5.1	
PERSULPHATES, INORGANIC, AQUEOUS SOLUTION, N.O.S.	3216	5.1	
PESTICIDE, LIQUID, FLAMMABLE, TOXIC, N.O.S., flash-point less than 23 °C	3021	3	
PESTICIDE, LIQUID, TOXIC, N.O.S.	2902	6.1	
PESTICIDE, LIQUID, TOXIC, FLAMMABLE, N.O.S., flash-point not less than 23 °C	2903	6.1	
PESTICIDE, SOLID, TOXIC, N.O.S.	2588	6.1	
Pesticide, toxic, under compressed gas, n.o.s, see	1950	2	

Name and description	UN No.	Class	Remarks
PETN, see	0150 0411	1 1	
PETN/TNT, see	0151	1	
PETROL	1203	3	
PETROLEUM CRUDE OIL	1267	3	
PETROLEUM DISTILLATES, N.O.S.	1268	3	
Petroleum ether, see	1268	3	
PETROLEUM GASES, LIQUEFIED	1075	2	
Petroleum naphtha, see	1268	3	
Petroleum oil, see	1268	3	
PETROLEUM PRODUCTS, N.O.S.	1268	3	
Petroleum raffinate, see	1268	3	
Petroleum spirit, see	1268	3	
PHENACYL BROMIDE	2645	6.1	
PHENETIDINES	2311	6.1	
PHENOLATES, LIQUID	2904	8	
PHENOLATES, SOLID	2905	8	
PHENOL, MOLTEN	2312	6.1	
PHENOL, SOLID	1671	6.1	
PHENOL SOLUTION	2821	6.1	
PHENOLSULPHONIC ACID, LIQUID	1803	8	
PHENOXYACETIC ACID DERIVATIVE PESTICIDE, LIQUID, FLAMMABLE, TOXIC, flash-point less than 23 °C	3346	3	
PHENOXYACETIC ACID DERIVATIVE PESTICIDE, LIQUID, TOXIC	3348	6.1	
PHENOXYACETIC ACID DERIVATIVE PESTICIDE, LIQUID, TOXIC, FLAMMABLE, flash-point not less than 23 °C	3347	6.1	
PHENOXYACETIC ACID DERIVATIVE PESTICIDE, SOLID, TOXIC	3345	6.1	
PHENYLACETONITRILE, LIQUID	2470	6.1	
PHENYLACETYL CHLORIDE	2577	8	
Phenylamine, see	1547	6.1	
1-Phenylbutane, see	2709	3	
2-Phenylbutane, see	2709	3	
PHENYLCARBYLAMINE CHLORIDE	1672	6.1	
PHENYL CHLOROFORMATE	2746	6.1	
Phenyl cyanide, see	2224	6.1	
PHENYLENEDIAMINES (o-, m-, p-)	1673	6.1	
Phenylethylene, see	2055	3	
PHENYLHYDRAZINE	2572	6.1	
PHENYL ISOCYANATE	2487	6.1	
Phenylisocyanodichloride, see	1672	6.1	
PHENYL MERCAPTAN	2337	6.1	
PHENYLMERCURIC ACETATE	1674	6.1	
PHENYLMERCURIC COMPOUND, N.O.S.	2026	6.1	
PHENYLMERCURIC HYDROXIDE	1894	6.1	
PHENYLMERCURIC NITRATE	1895	6.1	
PHENYLPHOSPHORUS DICHLORIDE	2798	8	
PHENYLPHOSPHORUS THIODICHLORIDE	2799	8	
2-Phenylpropene, see	2303	3	
PHENYLTRICHLOROSILANE	1804	8	
PHOSGENE	1076	2	
9-PHOSPHABICYCLO-NONANES	2940	4.2	
PHOSPHINE	2199	2	
Phosphoretted hydrogen, see	2199	2	
PHOSPHORIC ACID, SOLUTION	1805	8	
PHOSPHORIC ACID, SOLID	3453	8	
Phosphoric acid, anhydrous, see	1807	8	
PHOSPHOROUS ACID	2834	8	
PHOSPHORUS, AMORPHOUS	1338	4.1	
Phosphorus bromide, see	1808	8	
Phosphorus chloride, see	1809	6.1	
PHOSPHORUS HEPTASULPHIDE, free from yellow and white phosphorus	1339	4.1	
PHOSPHORUS OXYBROMIDE	1939	8	

Name and description	UN No.	Class	Remarks
PHOSPHORUS OXYBROMIDE, MOLTEN	2576	8	
PHOSPHORUS OXYCHLORIDE	1810	8	
PHOSPHORUS PENTABROMIDE	2691	8	
PHOSPHORUS PENTACHLORIDE	1806	8	
PHOSPHORUS PENTAFLUORIDE	2198	2	
PHOSPHORUS PENTASULPHIDE, free from yellow and white phosphorus	1340	4.3	
PHOSPHORUS PENTOXIDE	1807	8	
PHOSPHORUS SESQUISULPHIDE, free from yellow and white phosphorus	1341	4.1	
Phosphorus (V) sulphide, free from yellow and white phosphorus, see	1340	4.3	
Phosphorus sulphochloride, see	1837	8	
PHOSPHORUS TRIBROMIDE	1808	8	
PHOSPHORUS TRICHLORIDE	1809	6.1	
PHOSPHORUS TRIOXIDE	2578	8	
PHOSPHORUS TRISULPHIDE, free from yellow and white phosphorus	1343	4.1	
PHOSPHORUS, WHITE, DRY	1381	4.2	
PHOSPHORUS, WHITE IN SOLUTION	1381	4.2	
PHOSPHORUS, WHITE, MOLTEN	2447	4.2	
PHOSPHORUS, WHITE, UNDER WATER	1381	4.2	
PHOSPHORUS, YELLOW, DRY	1381	4.2	
PHOSPHORUS, YELLOW, IN SOLUTION	1381	4.2	
PHOSPHORUS, YELLOW, UNDER WATER	1381	4.2	
Phosphoryl chloride, see	1810	8	
PHTHALIC ANHYDRIDE with more than 0.05% of maleic anhydride	2214	8	
PICOLINES	2313	3	
PICRAMIDE, see	0153	1	
PICRIC ACID, see	3364	4.1	
PICRITE, see	0282	1	
PICRITE, WETTED, see	1336	4.1	
Picrotoxin, see	3172 3462	6.1 6.1	
PICRYL CHLORIDE, see	0155	1	
alpha-PINENE	2368	3	
PINE OIL	1272	3	
PIPERAZINE	2579	8	
PIPERIDINE	2401	8	
Pivaloyl chloride, see	2438	6.1	
Plastic explosives, see	0084	1	
PLASTICS MOULDING COMPOUND in dough, sheet or extruded rope form evolving flammable vapour	3314	9	
PLASTICS, NITROCELLULOSE-BASED, SELF-HEATING, N.O.S.	2006	4.2	
POLYAMINES, FLAMMABLE, CORROSIVE, N.O.S.	2733	3	
POLYAMINES, LIQUID, CORROSIVE, N.O.S.	2735	8	
POLYAMINES, LIQUID, CORROSIVE, FLAMMABLE, N.O.S.	2734	8	
POLYAMINES, SOLID, CORROSIVE, N.O.S.	3259	8	
POLYCHLORINATED BIPHENYLS, LIQUID	2315	9	
POLYCHLORINATED BIPHENYLS, SOLID	3432	9	
POLYESTER RESIN KIT	3269	3	
POLYHALOGENATED BIPHENYLS, LIQUID	3151	9	
POLYHALOGENATED BIPHENYLS, SOLID	3152	9	
POLYHALOGENATED TERPHENYLS, LIQUID	3151	9	
POLYHALOGENATED TERPHENYLS, SOLID	3152	9	
POLYMERIC BEADS, EXPANDABLE, evolving flammable vapour	2211	9	
Polystyrene beads, expandable, see	2211	9	
POTASSIUM	2257	4.3	

Name and description	UN No.	Class	Remarks
POTASSIUM ARSENATE	1677	6.1	
POTASSIUM ARSENITE	1678	6.1	
Potassium bifluoride, see	1811	8	
Potassium bisulphate, see	2509	8	
Potassium bisulphite solution, see	2693	8	
POTASSIUM BOROHYDRIDE	1870	4.3	
POTASSIUM BROMATE	1484	5.1	
POTASSIUM CHLORATE	1485	5.1	
POTASSIUM CHLORATE, AQUEOUS SOLUTION	2427	5.1	
Potassium chlorate mixed with mineral oil, see	0083	1	
POTASSIUM CUPROCYANIDE	1679	6.1	
POTASSIUM CYANIDE, SOLID	1680	6.1	
POTASSIUM CYANIDE, SOLUTION	3413	6.1	
Potassium dicyanocuprate (I), see	1679	6.1	
POTASSIUM DITHIONITE	1929	4.2	
POTASSIUM FLUORIDE, SOLID	1812	6.1	
POTASSIUM FLUORIDE, SOLUTION	3422	6.1	
POTASSIUM FLUOROACETATE	2628	6.1	
POTASSIUM FLUOROSILICATE	2655	6.1	
Potassium hexafluorosilicate, see	2655	6.1	
Potassium hydrate, see	1814	8	
POTASSIUM HYDROGENDIFLUORIDE, SOLID	1811	8	
POTASSIUM HYDROGENDIFLUORIDE, SOLUTION	3421	8	
POTASSIUM HYDROGEN SULPHATE	2509	8	
POTASSIUM HYDROSULPHITE, see	1929	4.2	
Potassium hydroxide, liquid, see	1814	8	
POTASSIUM HYDROXIDE, SOLID	1813	8	
POTASSIUM HYDROXIDE SOLUTION	1814	8	
POTASSIUM METAL ALLOYS, LIQUID	1420	4.3	
POTASSIUM METAL ALLOYS, SOLID	3403	4.3	
POTASSIUM METAVANADATE	2864	6.1	
POTASSIUM MONOXIDE	2033	8	
POTASSIUM NITRATE	1486	5.1	
Potassium nitrate and sodium nitrate mixture, see	1499	5.1	
POTASSIUM NITRATE AND SODIUM NITRITE MIXTURE	1487	5.1	
POTASSIUM NITRITE	1488	5.1	
POTASSIUM PERCHLORATE	1489	5.1	
POTASSIUM PERMANGANATE	1490	5.1	
POTASSIUM PEROXIDE	1491	5.1	
POTASSIUM PERSULPHATE	1492	5.1	
POTASSIUM PHOSPHIDE	2012	4.3	
Potassium selenate, see	2630	6.1	
Potassium selenite, see	2630	6.1	
Potassium silicofluoride, see	2655	6.1	
POTASSIUM SODIUM ALLOYS, LIQUID	1422	4.3	
POTASSIUM SODIUM ALLOYS, SOLID	3404	4.3	
POTASSIUM SULPHIDE with less than 30% water of crystallization	1382	4.2	
POTASSIUM SULPHIDE, ANHYDROUS	1382	4.2	
POTASSIUM SULPHIDE, HYDRATED with not less than 30% water of crystallization	1847	8	
POTASSIUM SUPEROXIDE	2466	5.1	
Potassium tetracyanomercurate (II), see	1626	6.1	
POWDER CAKE, WETTED with not less than 17% alcohol, by mass	0433	1	
POWDER CAKE, WETTED with not less than 25% water, by mass	0159	1	
POWDER PASTE, see	0159 0433	1 1	

Name and description	UN No.	Class	Remarks
POWDER, SMOKELESS	0160	1	
	0161	1	
Power devices, explosive, see	0275	1	
	0276	1	
	0323	1	
	0381	1	
PRIMERS, CAP TYPE	0044	1	
	0377	1	
	0378	1	
Primers, small arms, see	0044	1	
PRIMERS, TUBULAR	0319	1	
	0320	1	
	0376	1	
PRINTING INK, flammable or PRINTING INK RELATED MATERIAL (including printing ink thinning or reducing compound), flammable	1210	3	
Projectiles, illuminating, see	0171	1	
	0254	1	
	0297	1	
PROJECTILES, inert with tracer	0345	1	
	0424	1	
	0425	1	
PROJECTILES with burster or expelling charge	0346	1	
	0347	1	
	0426	1	
	0427	1	
	0434	1	
	0435	1	
PROJECTILES with bursting charge	0167	1	
	0168	1	
	0169	1	
	0324	1	
	0344	1	
PROPADIENE, STABILIZED	2200	2	
Propadiene and methyl acetylene mixture, stabilized, see	1060	2	
PROPANE	1978	2	
PROPANETHIOLS	2402	3	
n-PROPANOL	1274	3	
PROPELLANT, LIQUID	0495	1	
	0497	1	
PROPELLANT, SOLID	0498	1	
	0499	1	
	0501	1	
Propellant with a single base, Propellant with a double base, Propellant with a triple base, see	0160	1	
	0161	1	
Propene, see	1077	2	
PROPIONALDEHYDE	1275	3	
PROPIONIC ACID	1848	8	
PROPIONIC ANHYDRIDE	2496	8	
PROPIONITRILE	2404	3	
PROPIONYL CHLORIDE	1815	3	
n-PROPYL ACETATE	1276	3	
PROPYL ALCOHOL, NORMAL, see	1274	3	
PROPYLAMINE	1277	3	
n-PROPYLBENZENE	2364	3	
Propyl chloride, see	1278	3	
n-PROPYL CHLOROFORMATE	2740	6.1	
PROPYLENE	1077	2	
PROPYLENE CHLOROHYDRIN	2611	6.1	
1,2-PROPYLENEDIAMINE	2258	8	
Propylene dichloride, see	1279	3	
PROPYLENEIMINE, STABILIZED	1921	3	
PROPYLENE OXIDE	1280	3	
PROPYLENE TETRAMER	2850	3	
Propylene trimer, see	2057	3	
PROPYL FORMATES	1281	3	
n-PROPYL ISOCYANATE	2482	6.1	
Propyl mercaptan, see	2402	3	
n-PROPYL NITRATE	1865	3	
PROPYLTRICHLOROSILANE	1816	8	
Pyrazine hexahydride, see	2579	8	
PYRETHROID PESTICIDE, LIQUID, FLAMMABLE, TOXIC, flash-point less than 23 °C	3350	3	
PYRETHROID PESTICIDE, LIQUID, TOXIC	3352	6.1	
PYRETHROID PESTICIDE, LIQUID, TOXIC, FLAMMABLE, flash-point not less than 23 °C	3351	6.1	
PYRETHROID PESTICIDE, SOLID, TOXIC	3349	6.1	
PYRIDINE	1282	3	
PYROPHORIC ALLOY, N.O.S.	1383	4.2	

Name and description	UN No.	Class	Remarks
PYROPHORIC LIQUID, INORGANIC, N.O.S.	3194	4.2	
PYROPHORIC LIQUID, ORGANIC, N.O.S.	2845	4.2	
PYROPHORIC METAL, N.O.S.	1383	4.2	
PYROPHORIC SOLID, INORGANIC, N.O.S.	3200	4.2	
PYROPHORIC SOLID, ORGANIC, N.O.S.	2846	4.2	
PYROSULPHURYL CHLORIDE	1817	8	
Pyroxylin solution, see	2059	3	
PYRROLIDINE	1922	3	
Quinol, see	2662	6.1	
QUINOLINE	2656	6.1	
Quinone, see	2587	6.1	
RADIOACTIVE MATERIAL, EXCEPTED PACKAGE - ARTICLES MANUFACTURED FROM NATURAL URANIUM or DEPLETED URANIUM or NATURAL THORIUM	2909	7	
RADIOACTIVE MATERIAL, EXCEPTED PACKAGE - EMPTY PACKAGING	2908	7	
RADIOACTIVE MATERIAL, EXCEPTED PACKAGE - INSTRUMENTS or ARTICLES	2911	7	
RADIOACTIVE MATERIAL, EXCEPTED PACKAGE - LIMITED QUANTITY OF MATERIAL	2910	7	
RADIOACTIVE MATERIAL, LOW SPECIFIC ACTIVITY (LSA-I), non fissile or fissile-excepted	2912	7	
RADIOACTIVE MATERIAL, LOW SPECIFIC ACTIVITY (LSA-II), FISSILE	3324	7	
RADIOACTIVE MATERIAL, LOW SPECIFIC ACTIVITY (LSA-II), non fissile or fissile-excepted	3321	7	
RADIOACTIVE MATERIAL, LOW SPECIFIC ACTIVITY, (LSA-III), FISSILE	3325	7	
RADIOACTIVE MATERIAL, LOW SPECIFIC ACTIVITY (LSA-III), non fissile or fissile-excepted	3322	7	
RADIOACTIVE MATERIAL, SURFACE CONTAMINATED OBJECTS (SCO-I or SCO-II), FISSILE	3326	7	
RADIOACTIVE MATERIAL, SURFACE CONTAMINATED OBJECTS (SCO-I or SCO-II), non fissile or fissile-excepted	2913	7	
RADIOACTIVE MATERIAL, TRANSPORTED UNDER SPECIAL ARRANGEMENT, FISSILE	3331	7	
RADIOACTIVE MATERIAL, TRANSPORTED UNDER SPECIAL ARRANGEMENT, non fissile or fissile-excepted	2919	7	
RADIOACTIVE MATERIAL, TYPE A PACKAGE, FISSILE, non-special form	3327	7	
RADIOACTIVE MATERIAL, TYPE A PACKAGE, non-special form, non fissile or fissile-excepted	2915	7	
RADIOACTIVE MATERIAL, TYPE A PACKAGE, SPECIAL FORM, FISSILE	3333	7	
RADIOACTIVE MATERIAL, TYPE A PACKAGE, SPECIAL FORM, non fissile or fissile-excepted	3332	7	
RADIOACTIVE MATERIAL, TYPE B(M) PACKAGE, FISSILE	3329	7	
RADIOACTIVE MATERIAL, TYPE B(M) PACKAGE, non fissile or fissile-excepted	2917	7	
RADIOACTIVE MATERIAL, TYPE B(U) PACKAGE, FISSILE	3328	7	
RADIOACTIVE MATERIAL, TYPE B(U) PACKAGE, non fissile or fissile-excepted	2916	7	
RADIOACTIVE MATERIAL, TYPE C PACKAGE, FISSILE	3330	7	
RADIOACTIVE MATERIAL, TYPE C PACKAGE, non fissile or fissile-excepted	3323	7	

Name and description	UN No.	Class	Remarks
RADIOACTIVE MATERIAL, URANIUM HEXAFLUORIDE, FISSILE	2977	7	
RADIOACTIVE MATERIAL, URANIUM HEXAFLUORIDE, non fissile or fissile-excepted	2978	7	
Rags, oily	1856	4.2	Not subject to ADR
RARE GASES AND NITROGEN MIXTURE, COMPRESSED	1981	2	
RARE GASES AND OXYGEN MIXTURE, COMPRESSED	1980	2	
RARE GASES MIXTURE, COMPRESSED	1979	2	
RDX, see	0072 0391 0483	1 1 1	
RECEPTACLES, SMALL, CONTAINING GAS without a release device, non-refillable	2037	2	
Red phosphorus, see	1338	4.1	
REFRIGERANT GAS, N.O.S., such as mixture F1, mixture F2 or mixture P2	1078	2	
REFRIGERANT GAS R 12, see	1028	2	
REFRIGERANT GAS R 12B1, see	1974	2	
REFRIGERANT GAS R 13, see	1022	2	
REFRIGERANT GAS R 13B1, see	1009	2	
REFRIGERANT GAS R 14, see	1982	2	
REFRIGERANT GAS R 21, see	1029	2	
REFRIGERANT GAS R 22, see	1018	2	
REFRIGERANT GAS R 23, see	1984	2	
REFRIGERANT GAS R 32, see	3252	2	
REFRIGERANT GAS R 40, see	1063	2	
REFRIGERANT GAS R 41, see	2454	2	
REFRIGERANT GAS R 114, see	1958	2	
REFRIGERANT GAS R 115, see	1020	2	
REFRIGERANT GAS R 116, see	2193	2	
REFRIGERANT GAS R 124, see	1021	2	
REFRIGERANT GAS R 125, see	3220	2	
REFRIGERANT GAS R 133a, see	1983	2	
REFRIGERANT GAS R 134a, see	3159	2	
REFRIGERANT GAS R 142b, see	2517	2	
REFRIGERANT GAS R 143a, see	2035	2	
REFRIGERANT GASR 152a, see	1030	2	
REFRIGERANT GAS R 161, see	2453	2	
REFRIGERANT GAS R 218, see	2424	2	
REFRIGERANT GAS R 227, see	3296	2	
REFRIGERANT GAS R 404A	3337	2	
REFRIGERANT GAS R 407A	3338	2	
REFRIGERANT GAS R 407B	3339	2	
REFRIGERANT GAS R 407C	3340	2	
REFRIGERANT GAS R 500, see	2602	2	
REFRIGERANT GAS R 502, see	1973	2	
REFRIGERANT GAS R 503, see	2599	2	
REFRIGERANT GAS R 1132a, see	1959	2	
REFRIGERANT GAS R 1216, see	1858	2	
REFRIGERANT GAS R 1318, see	2422	2	
REFRIGERANT GAS RC 318, see	1976	2	
REFRIGERATING MACHINES containing flammable, non-toxic, liquefied gas	3358	2	
REFRIGERATING MACHINES containing non-flammable, non-toxic, gases or ammonia solutions (UN 2672)	2857	2	
REGULATED MEDICAL WASTE, N.O.S.	3291	6.2	
RELEASE DEVICES, EXPLOSIVE	0173	1	
RESIN SOLUTION, flammable	1866	3	
Resorcin, see	2876	6.1	
RESORCINOL	2876	6.1	
RIVETS, EXPLOSIVE	0174	1	
ROCKET MOTORS	0186 0280 0281	1 1 1	
ROCKET MOTORS, LIQUID FUELLED	0395 0396	1 1	

Name and description	UN No.	Class	Remarks
ROCKET MOTORS WITH HYPERGOLIC LIQUIDS with or without expelling charge	0250 0322	1 1	
ROCKETS with bursting charge	0180 0181 0182 0295	1 1 1 1	
ROCKETS with expelling charge	0436 0437 0438	1 1 1	
ROCKETS with inert head	0183 0502	1 1	
ROCKETS, LINE-THROWING	0238 0240 0453	1 1 1	
ROCKETS, LIQUID FUELLED with bursting charge	0397 0398	1 1	
ROSIN OIL	1286	3	
RUBBER SCRAP, powdered or granulated	1345	4.1	
RUBBER SHODDY, powdered or granulated	1345	4.1	
RUBBER SOLUTION	1287	3	
RUBIDIUM	1423	4.3	
RUBIDIUM HYDROXIDE	2678	8	
RUBIDIUM HYDROXIDE SOLUTION	2677	8	
Saltpetre, see	1486	5.1	
SAMPLES, EXPLOSIVE, other than initiating explosive	0190	1	
Sand acid, see	1778	8	
SEAT-BELT PRETENSIONERS	0503 3268	1 9	
SEED CAKE with more than 1.5% oil and not more than 11% moisture	1386	4.2	
SEED CAKE with not more than 1.5% oil and not more than 11% moisture	2217	4.2	
Seed expellers, see	1386 2217	4.2 4.2	
SELENATES	2630	6.1	
SELENIC ACID	1905	8	
SELENITES	2630	6.1	
SELENIUM COMPOUND, LIQUID, N.O.S.	3440	6.1	
SELENIUM COMPOUND, SOLID, N.O.S.	3283	6.1	
SELENIUM DISULPHIDE	2657	6.1	
SELENIUM HEXAFLUORIDE	2194	2	
SELENIUM OXYCHLORIDE	2879	8	
SELF-HEATING LIQUID, CORROSIVE, INORGANIC, N.O.S.	3188	4.2	
SELF-HEATING LIQUID, CORROSIVE, ORGANIC, N.O.S.	3185	4.2	
SELF-HEATING LIQUID, INORGANIC, N.O.S.	3186	4.2	
SELF-HEATING LIQUID, ORGANIC, N.O.S.	3183	4.2	
SELF-HEATING LIQUID, TOXIC, INORGANIC, N.O.S.	3187	4.2	
SELF-HEATING LIQUID, TOXIC, ORGANIC, N.O.S.	3184	4.2	
SELF-HEATING SOLID, CORROSIVE, INORGANIC, N.O.S.	3192	4.2	
SELF-HEATING SOLID, CORROSIVE, ORGANIC, N.O.S.	3126	4.2	
SELF-HEATING SOLID, INORGANIC, N.O.S.	3190	4.2	
SELF-HEATING SOLID, ORGANIC, N.O.S.	3088	4.2	
SELF-HEATING SOLID, OXIDIZING, N.O.S	3127	4.2	Carriage prohi-bited
SELF-HEATING SOLID, TOXIC, INORGANIC, N.O.S.	3191	4.2	
SELF-HEATING SOLID, TOXIC, ORGANIC, N.O.S.	3128	4.2	
SELF-REACTIVE LIQUID TYPE B	3221	4.1	
SELF-REACTIVE LIQUID TYPE B, TEMPERATURE CONTROLLED	3231	4.1	
SELF-REACTIVE LIQUID TYPE C	3223	4.1	
SELF-REACTIVE LIQUID TYPE C, TEMPERATURE CONTROLLED	3233	4.1	
SELF-REACTIVE LIQUID TYPE D	3225	4.1	

Name and description	UN No.	Class	Remarks
SELF-REACTIVE LIQUID TYPE D, TEMPERATURE CONTROLLED	3235	4.1	
SELF-REACTIVE LIQUID TYPE E	3227	4.1	
SELF-REACTIVE LIQUID TYPE E, TEMPERATURE CONTROLLED	3237	4.1	
SELF-REACTIVE LIQUID TYPE F	3229	4.1	
SELF-REACTIVE LIQUID TYPE F, TEMPERATURE CONTROLLED	3239	4.1	
SELF-REACTIVE SOLID TYPE B	3222	4.1	
SELF-REACTIVE SOLID TYPE B, TEMPERATURE CONTROLLED	3232	4.1	
SELF-REACTIVE SOLID TYPE C	3224	4.1	
SELF-REACTIVE SOLID TYPE C, TEMPERATURE CONTROLLED	3234	4.1	
SELF-REACTIVE SOLID TYPE D	3226	4.1	
SELF-REACTIVE SOLID TYPE D, TEMPERATURE CONTROLLED	3236	4.1	
SELF-REACTIVE SOLID TYPE E	3228	4.1	
SELF-REACTIVE SOLID TYPE E, TEMPERATURE CONTROLLED	3238	4.1	
SELF-REACTIVE SOLID TYPE F	3230	4.1	
SELF-REACTIVE SOLID TYPE F, TEMPERATURE CONTROLLED	3240	4.1	
SHALE OIL	1288	3	
Shaped charges, see	0059	1	
	0439	1	
	0440	1	
	0441	1	
SIGNAL DEVICES, HAND	0191	1	
	0373	1	
SIGNALS, DISTRESS, ship	0194	1	
	0195	1	
Signals, distress, ship, water-activated, see	0249	1	
SIGNALS, RAILWAY TRACK, EXPLOSIVE	0192	1	
	0193	1	
	0492	1	
	0493	1	
SIGNALS, SMOKE	0196	1	
	0197	1	
	0313	1	
	0487	1	
SILANE	2203	2	
Silicofluoric acid, see	1778	8	
Silicofluorides, n.o.s., see	2856	6.1	
Silicon chloride, see	1818	8	
SILICON POWDER, AMORPHOUS	1346	4.1	
SILICON TETRACHLORIDE	1818	8	
SILICON TETRAFLUORIDE	1859	2	
SILVER ARSENITE	1683	6.1	
SILVER CYANIDE	1684	6.1	
SILVER NITRATE	1493	5.1	
SILVER PICRATE, WETTED with not less than 30% water, by mass	1347	4.1	
SLUDGE ACID	1906	8	
SODA LIME with more than 4% sodium hydroxide	1907	8	
SODIUM	1428	4.3	
Sodium aluminate, solid	2812	8	Not subject to ADR
SODIUM ALUMINATE SOLUTION	1819	8	
SODIUM ALUMINIUM HYDRIDE	2835	4.3	
SODIUM AMMONIUM VANADATE	2863	6.1	
SODIUM ARSANILATE	2473	6.1	
SODIUM ARSENATE	1685	6.1	
SODIUM ARSENITE, AQUEOUS SOLUTION	1686	6.1	
SODIUM ARSENITE, SOLID	2027	6.1	
SODIUM AZIDE	1687	6.1	
Sodium bifluoride, see	2439	8	
Sodium binoxide, see	1504	5.1	
Sodium bisulphite solution, see	2693	8	
SODIUM BOROHYDRIDE	1426	4.3	

Name and description	UN No.	Class	Remarks
SODIUM BOROHYDRIDE AND SODIUM HYDROXIDE SOLUTION, with not more than 12% sodium borohydride and not more than 40% sodium hydroxide by mass	3320	8	
SODIUM BROMATE	1494	5.1	
SODIUM CACODYLATE	1688	6.1	
SODIUM CARBONATE PEROXYHYDRATE	3378	5.1	
SODIUM CHLORATE	1495	5.1	
SODIUM CHLORATE, AQUEOUS SOLUTION	2428	5.1	
Sodium chlorate mixed with dinitrotoluene, see	0083	1	
SODIUM CHLORITE	1496	5.1	
SODIUM CHLOROACETATE	2659	6.1	
SODIUM CUPROCYANIDE, SOLID	2316	6.1	
SODIUM CUPROCYANIDE SOLUTION	2317	6.1	
SODIUM CYANIDE, SOLID	1689	6.1	
SODIUM CYANIDE, SOLUTION	3414	6.1	
Sodium dicyanocuprate (I), solid, see	2316	6.1	
Sodium dicyanocuprate (I) solution, see	2317	6.1	
Sodium dimethylarsenate, see	1688	6.1	
SODIUM DINITRO-o-CRESOLATE, dry or wetted with less than 15% water, by mass	0234	1	
SODIUM DINITRO-o-CRESOLATE, WETTED with not less than 10% water, by mass	3369	4.1	
SODIUM DINITRO-o-CRESOLATE, WETTED with not less than 15% water, by mass	1348	4.1	
Sodium dioxide, see	1504	5.1	
SODIUM DITHIONITE	1384	4.2	
SODIUM FLUORIDE, SOLID	1690	6.1	
SODIUM FLUORIDE, SOLUTION	3415	6.1	
SODIUM FLUOROACETATE	2629	6.1	
SODIUM FLUOROSILICATE	2674	6.1	
Sodium hexafluorosilicate, see	2674	6.1	
Sodium hydrate, see	1824	8	
SODIUM HYDRIDE	1427	4.3	
Sodium hydrogen 4-amino-phenylarsenate, see	2473	6.1	
SODIUM HYDROGEN-DIFLUORIDE	2439	8	
SODIUM HYDROSULPHIDE with less than 25% water of crystallization	2318	4.2	
SODIUM HYDROSULPHIDE with not less than 25% water of crystallization	2949	8	
SODIUM HYDROSULPHITE, see	1384	4.2	
SODIUM HYDROXIDE, SOLID	1823	8	
SODIUM HYDROXIDE SOLUTION	1824	8	
Sodium metasilicate pentahydrate, see	3253	8	
SODIUM METHYLATE	1431	4.2	
SODIUM METHYLATE SOLUTION in alcohol	1289	3	
SODIUM MONOXIDE	1825	8	
SODIUM NITRATE	1498	5.1	
SODIUM NITRATE AND POTASSIUM NITRATE MIXTURE	1499	5.1	
SODIUM NITRITE	1500	5.1	
Sodium nitrite and potassium nitrate mixture, see	1487	5.1	
SODIUM PENTACHLORO-HENATE	2567	6.1	
SODIUM PERBORATE MONOHYDRATE	3377	5.1	
SODIUM PERCHLORATE	1502	5.1	
SODIUM PERMANGANATE	1503	5.1	
SODIUM PEROXIDE	1504	5.1	
SODIUM PEROXOBORATE, ANHYDROUS	3247	5.1	
SODIUM PERSULPHATE	1505	5.1	
SODIUM PHOSPHIDE	1432	4.3	
SODIUM PICRAMATE, dry or wetted with less than 20% water, by mass	0235	1	

Name and description	UN No.	Class	Remarks
SODIUM PICRAMATE, WETTED with not less than 20% water, by mass	1349	4.1	
Sodium potassium alloys, liquid, see	1422	4.3	
Sodium selenate, see	2630	6.1	
Sodium selenite, see	2630	6.1	
Sodium silicofluoride, see	2674	6.1	
SODIUM SULPHIDE, ANHYDROUS	1385	4.2	
SODIUM SULPHIDE with less than 30% water of crystallization	1385	4.2	
SODIUM SULPHIDE, HYDRATED with not less than 30% water	1849	8	
SODIUM SUPEROXIDE	2547	5.1	
SOLIDS CONTAINING CORROSIVE LIQUID, N.O.S.	3244	8	
SOLIDS or mixtures of solids (such as preparations and wastes) CONTAINING FLAMMABLE LIQUID, N.O.S. having a flash-point up to 61°C	3175	4.1	
SOLIDS CONTAINING TOXIC LIQUID, N.O.S.	3243	6.1	
Solvents, flammable, n.o.s., see	1993	3	
Solvents, flammable, toxic, n.o.s., see	1992	3	
SOUNDING DEVICES, EXPLOSIVE	0204 0296 0374 0375	1 1 1 1	
Squibs, see	0325 0454	1 1	
STANNIC CHLORIDE, ANHYDROUS	1827	8	
STANNIC CHLORIDE PENTAHYDRATE	2440	8	
STANNIC PHOSPHIDES	1433	4.3	
Steel swarf, see	2793	4.2	
STIBINE	2676	2	
Straw	1327	4.1	Not subject to ADR
Strontium alloys, pyrophoric, see	1383	4.2	
STRONTIUM ARSENITE	1691	6.1	

Name and description	UN No.	Class	Remarks
STRONTIUM CHLORATE	1506	5.1	
Strontium dioxide, see	1509	5.1	
STRONTIUM NITRATE	1507	5.1	
STRONTIUM PERCHLORATE	1508	5.1	
STRONTIUM PEROXIDE	1509	5.1	
STRONTIUM PHOSPHIDE	2013	4.3	
STRYCHNINE	1692	6.1	
STRYCHNINE SALTS	1692	6.1	
STYPHNIC ACID, see	0219 0394	1 1	
STYRENE MONOMER, STABILIZED	2055	3	
SUBSTANCES, EVI, N.O.S., see	0482	1	
SUBSTANCES, EXPLOSIVE, N.O.S.	0357 0358 0359 0473 0474 0475 0476 0477 0478 0479 0480 0481 0485	1 1 1 1 1 1 1 1 1 1 1 1 1	
SUBSTANCES, EXPLOSIVE, VERY INSENSITIVE, N.O.S.	0482	1	
Substances liable to spontaneous combustion, n.o.s., see	2845 2846 3194 3200	4.2 4.2 4.2 4.2	
SUBSTITUTED NITROPHENOL PESTICIDE, LIQUID, FLAMMABLE, TOXIC, flash-point less than 23 °C	2780	3	
SUBSTITUTED NITROPHENOL PESTICIDE, LIQUID, TOXIC	3014	6.1	
SUBSTITUTED NITROPHENOL PESTICIDE, LIQUID, TOXIC, FLAMMABLE, flash-point not less than 23 °C	3013	6.1	
SUBSTITUTED NITROPHENOL PESTICIDE, SOLID, TOXIC	2779	6.1	
SULPHAMIC ACID	2967	8	
SULPHUR	1350	4.1	

Name and description	UN No.	Class	Remarks
SULPHUR CHLORIDES	1828	8	
Sulphur dichloride, see	1828	8	
SULPHUR DIOXIDE	1079	2	
Sulphuretted hydrogen, see	1053	2	
SULPHUR HEXAFLUORIDE	1080	2	
SULPHURIC ACID with more than 51% acid	1830	8	
SULPHURIC ACID with not more than 51% acid	2796	8	
SULPHURIC ACID, FUMING	1831	8	
SULPHURIC ACID, SPENT	1832	8	
Sulphuric and hydrofluoric acid mixture, see	1786	8	
SULPHUR, MOLTEN	2448	4.1	
Sulphur monochloride, see	1828	8	
SULPHUROUS ACID	1833	8	
SULPHUR TETRAFLUORIDE	2418	2	
SULPHUR TRIOXIDE, STABILIZED	1829	8	
SULPHURYL CHLORIDE	1834	8	
SULPHURYL FLUORIDE	2191	2	
Synthesis gas, see	2600	2	
Talcum with tremolite and/or actinolite, see	2590	9	
TARS, LIQUID, including road asphalt and oils, bitumen and cut backs	1999	3	
Tartar emetic, see	1551	6.1	
TEAR GAS CANDLES	1700	6.1	
TEAR GAS SUBSTANCE, LIQUID, N.O.S.	1693	6.1	
TEAR GAS SUBSTANCE, SOLID, N.O.S.	3448	6.1	
TELLURIUM COMPOUND, N.O.S.	3284	6.1	
TELLURIUM HEXAFLUORIDE	2195	2	
TERPENE HYDROCARBONS, N.O.S.	2319	3	
TERPINOLENE	2541	3	
TETRABROMOETHANE	2504	6.1	
1,1,2,2-TETRACHLORO-ETHANE	1702	6.1	
TETRACHLOROETHYLENE	1897	6.1	
TETRAETHYL DITHIO-PYROPHOSPHATE	1704	6.1	
TETRAETHYLENE-PENTAMINE	2320	8	
Tetraethyl lead, see	1649	6.1	
TETRAETHYL SILICATE	1292	3	
Tetraethyoxysilane, see	1292	3	
Tetrafluorodichloroethane, see	1958	2	
1,1,1,2-TETRAFLUORO-ETHANE	3159	2	
TETRAFLUOROETHYLENE, STABILIZED	1081	2	
TETRAFLUOROMETHANE	1982	2	
1,2,3,6-TETRAHYDRO-BENZALDEHYDE	2498	3	
TETRAHYDROFURAN	2056	3	
TETRAHYDRO-FURFURYLAMINE	2943	3	
Tetrahydro-1,4-oxazine, see	2054	3	
TETRAHYDROPHTHALIC ANHYDRIDES with more than 0.05% of maleic anhydride	2698	8	
1,2,3,6-TETRAHYDRO-PYRIDINE	2410	3	
TETRAHYDROTHIOPHENE	2412	3	
Tetramethoxysilane, see	2606	6.1	
TETRAMETHYLAMMONIUM HYDROXIDE SOLID	3423	8	
TETRAMETHYLAMMONIUM HYDROXIDE SOLUTION	1835	8	
Tetramethylene, see	2601	2	
Tetramethylene cyanide, see	2205	6.1	
Tetramethyl lead, see	1649	6.1	
TETRAMETHYLSILANE	2749	3	
TETRANITROANILINE	0207	1	
TETRANITROMETHANE	1510	5.1	
TETRAPROPYL ORTHOTITANATE	2413	3	
TETRAZENE, WETTED with not less than 30% water, or mixture of alcohol and water, by mass, see	0114	1	
TETRAZOL-1-ACETIC ACID	0407	1	
1H-TETRAZOLE	0504	1	
TETRYL, see	0208	1	

Name and description	UN No.	Class	Remarks
Textile waste, wet	1857	4.2	Not subject to ADR
THALLIUM CHLORATE	2573	5.1	
Thallium (I) chlorate, see	2573	5.1	
THALLIUM COMPOUND, N.O.S.	1707	6.1	
THALLIUM NITRATE	2727	6.1	
Thallium (I) nitrate, see	2727	6.1	
Thallous chlorate, see	2573	5.1	
4-THIAPENTANAL	2785	6.1	
Thia-4-pentanal, see	2785	6.1	
THIOACETIC ACID	2436	3	
THIOCARBAMATE PESTICIDE, LIQUID, FLAMMABLE, TOXIC, flash-point less than 23 °C	2772	3	
THIOCARBAMATE PESTICIDE, LIQUID, TOXIC	3006	6.1	
THIOCARBAMATE PESTICIDE, LIQUID, TOXIC, FLAMMABLE, flash-point not less than 23 °C	3005	6.1	
THIOCARBAMATE PESTICIDE, SOLID, TOXIC	2771	6.1	
THIOGLYCOL	2966	6.1	
THIOGLYCOLIC ACID	1940	8	
THIOLACTIC ACID	2936	6.1	
THIONYL CHLORIDE	1836	8	
THIOPHENE	2414	3	
Thiophenol, see	2337	6.1	
THIOPHOSGENE	2474	6.1	
THIOPHOSPHORYL CHLORIDE	1837	8	
THIOUREA DIOXIDE	3341	4.2	
Tin (IV) chloride, anhydrous, see	1827	8	
Tin (IV) chloride pentahydrate, see	2440	8	
TINCTURES, MEDICINAL	1293	3	
Tin tetrachloride, see	1827	8	
TITANIUM DISULPHIDE	3174	4.2	
TITANIUM HYDRIDE	1871	4.1	
TITANIUM POWDER, DRY	2546	4.2	
TITANIUM POWDER, WETTED with not less than 25% water	1352	4.1	
TITANIUM SPONGE GRANULES	2878	4.1	
TITANIUM SPONGE POWDERS	2878	4.1	
TITANIUM TETRACHLORIDE	1838	8	
TITANIUM TRICHLORIDE MIXTURE	2869	8	
TITANIUM TRICHLORIDE MIXTURE, PYROPHORIC	2441	4.2	
TITANIUM TRICHLORIDE, PYROPHORIC	2441	4.2	
TNT, see	0209 0388 0389 1356	1 1 1 4.1	
TNT mixed with aluminium, see	0390	1	
TNT, WETTED with not less than 30% water, by mass, see	1356	4.1	
Toe puffs, nitrocellulose base, see	1353	4.1	
TOLUENE	1294	3	
TOLUENE DIISOCYANATE	2078	6.1	
TOLUIDINES, LIQUID	1708	6.1	
TOLUIDINES, SOLID	3451	6.1	
Toluol, see	1294	3	
2,4-TOLUYLENEDIAMINE, SOLID	1709	6.1	
2,4-TOLUYLENEDIAMINE, SOLUTION	3418	6.1	
Toluylene diisocyanate, see	2078	6.1	
Tolylene diisocyanate, see	2078	6.1	
Tolylethylene, inhibited, see	2618	3	
TORPEDOES with bursting charge	0329 0330 0451	1 1 1	
TORPEDOES, LIQUID FUELLED with inert head	0450	1	
TORPEDOES, LIQUID FUELLED with or without bursting charge	0449	1	
TOXIC BY INHALATION LIQUID, N.O.S. with an inhalation toxicity lower than or equal to 200 ml/m^3 and saturated vapour concentration greater than or equal to 500 LC_{50}	3381	6.1	

Name and description	UN No.	Class	Remarks
TOXIC BY INHALATION LIQUID, N.O.S. with an inhalation toxicity lower than or equal to 1000 ml/m^3 and saturated vapour concentration greater than or equal to 10 LC_{50}	3382	6.1	
TOXIC BY INHALATION LIQUID, CORROSIVE, N.O.S. with an inhalation toxicity lower than or equal to 200 ml/m^3 and saturated vapour concentration greater than or equal to 500 LC_{50}	3389	6.1	
TOXIC BY INHALATION LIQUID, CORROSIVE, N.O.S. with an inhalation toxicity lower than or equal to 1000 ml/m^3 and saturated vapour concentration greater than or equal to 10 LC_{50}	3390	6.1	
TOXIC BY INHALATION LIQUID, FLAMMABLE, N.O.S. with an inhalation toxicity lower than or equal to 200 ml/m^3 and saturated vapour concentration greater than or equal to 500 LC_{50}	3383	6.1	
TOXIC BY INHALATION LIQUID, FLAMMABLE, N.O.S. with an inhalation toxicity lower than or equal to 1000 ml/m^3 and saturated vapour concentration greater than or equal to 10 LC_{50}	3384	6.1	
TOXIC BY INHALATION LIQUID, OXIDIZING, N.O.S. with an inhalation toxicity lower than or equal to 200 ml/m^3 and saturated vapour concentration greater than or equal to 500 LC_{50}	3388	6.1	
TOXIC BY INHALATION LIQUID, WATER-REACTIVE, N.O.S. with an inhalation toxicity lower than or equal to 200 ml/m^3 and saturated vapour concentration greater than or equal to 500 LC_{50}	3385	6.1	
TOXIC BY INHALATION LIQUID, WATER-REACTIVE, N.O.S. with an inhalation toxicity lower than or equal to 1000 ml/m^3 and saturated vapour concentration greater than or equal to 10 LC_{50}	3386	6.1	
TOXIC LIQUID, CORROSIVE, INORGANIC, N.O.S.	3289	6.1	
TOXIC LIQUID, CORROSIVE, ORGANIC, N.O.S.	2927	6.1	
TOXIC LIQUID, FLAMMABLE, ORGANIC, N.O.S.	2929	6.1	
TOXIC LIQUID, INORGANIC, N.O.S.	3287	6.1	
TOXIC LIQUID, ORGANIC, N.O.S.	2810	6.1	
TOXIC LIQUID, OXIDIZING, N.O.S.	3122	6.1	
TOXIC LIQUID, WATER-REACTIVE, N.O.S.	3123	6.1	
TOXIC SOLID, CORROSIVE, INORGANIC, N.O.S.	3290	6.1	
TOXIC SOLID, CORROSIVE, ORGANIC, N.O.S.	2928	6.1	
TOXIC SOLID, FLAMMABLE, ORGANIC, N.O.S.	2930	6.1	
TOXIC SOLID, INORGANIC, N.O.S.	3288	6.1	
TOXIC SOLID, ORGANIC, N.O.S.	2811	6.1	
TOXIC SOLID, OXIDIZING, N.O.S.	3086	6.1	
TOXIC SOLID, SELF-HEATING, N.O.S.	3124	6.1	
TOXIC SOLID, WATER-REACTIVE, N.O.S.	3125	6.1	
TOXINS, EXTRACTED FROM LIVING SOURCES, LIQUID, N.O.S.	3172	6.1	
TOXINS, EXTRACTED FROM LIVING SOURCES, SOLID, N.O.S.	3462	6.1	
TRACERS FOR AMMUNITION	0212 0306	1 1	
Tremolite, see	2590	9	
TRIALLYLAMINE	2610	3	
TRIALLYL BORATE	2609	6.1	
TRIAZINE PESTICIDE, LIQUID, FLAMMABLE, TOXIC, flash-point less than 23 °C	2764	3	
TRIAZINE PESTICIDE, LIQUID, TOXIC	2998	6.1	
TRIAZINE PESTICIDE, LIQUID, TOXIC, FLAMMABLE, flash-point not less than 23 °C	2997	6.1	
TRIAZINE PESTICIDE, SOLID, TOXIC	2763	6.1	
Tribromoborane, see	2692	8	
TRIBUTYLAMINE	2542	6.1	
TRIBUTYLPHOSPHANE	3254	4.2	
Trichloroacetaldehyde, see	2075	6.1	

Name and description	UN No.	Class	Remarks
TRICHLOROACETIC ACID	1839	8	
TRICHLOROACETIC ACID SOLUTION	2564	8	
Trichlororaceticaldehyde, see	2075	6.1	
TRICHLOROACETYL CHLORIDE	2442	8	
TRICHLOROBENZENES, LIQUID	2321	6.1	
TRICHLOROBUTENE	2322	6.1	
1,1,1-TRICHLOROETHANE	2831	6.1	
TRICHLOROETHYLENE	1710	6.1	
TRICHLOROISOCYANURIC ACID, DRY	2468	5.1	
Trichloronitromethane, see	1580	6.1	
TRICHLOROSILANE	1295	4.3	
1,3,5-Trichloro-s-triazine-2,4,6-trione, see	2468	5.1	
2,4,6-Trichloro-1,3,5- triazine, see	2670	8	
TRICRESYL PHOSPHATE with more than 3% ortho isomer	2574	6.1	
TRIETHYLAMINE	1296	3	
Triethyl borate, see	1176	3	
TRIETHYLENETETRAMINE	2259	8	
Triethyl orthoformate, see	2524	3	
TRIETHYL PHOSPHITE	2323	3	
TRIFLUOROACETIC ACID	2699	8	
TRIFLUOROACETYL CHLORIDE	3057	2	
Trifluorobromomethane, see	1009	2	
Trifluorochloroethane, see	1983	2	
TRIFLUOROCHLORO-ETHYLENE, STABILIZED	1082	2	
Trifluorochloromethane, see	1022	2	
1,1,1-TRIFLUOROETHANE	2035	2	
TRIFLUOROMETHANE	1984	2	
TRIFLUOROMETHANE, REFRIGERATED LIQUID	3136	2	
2-TRIFLUOROMETHYL-ANILINE	2942	6.1	
3-TRIFLUOROMETHYL-ANILINE	2948	6.1	
TRIISOBUTYLENE	2324	3	
TRIISOPROPYL BORATE	2616	3	

Name and description	UN No.	Class	Remarks
TRIMETHYLACETYL CHLORIDE	2438	6.1	
TRIMETHYLAMINE, ANHYDROUS	1083	2	
TRIMETHYLAMINE, AQUEOUS SOLUTION, not more than 50% trimethylamine, by mass	1297	3	
1,3,5-TRIMETHYLBENZENE	2325	3	
TRIMETHYL BORATE	2416	3	
TRIMETHYLCHLOROSILANE	1298	3	
TRIMETHYLCYCLOHEXYL-AMINE	2326	8	
Trimethylene chlorobromide, see	2688	6.1	
TRIMETHYLHEXA-METHYLENEDIAMINES	2327	8	
TRIMETHYLHEXA-METHYLENE DIISOCYANATE	2328	6.1	
2,4,4-Trimethylpentene-1, see	2050	3	
2,4,4-Trimethylpentene-2, see	2050	3	
TRIMETHYL PHOSPHITE	2329	3	
TRINITROANILINE	0153	1	
TRINITROANISOLE	0213	1	
TRINITROBENZENE, dry or wetted with less than 30% water, by mass	0214	1	
TRINITROBENZENE, wetted with not less than 10% water, by mass	3367	4.1	
TRINITROBENZENE, WETTED with not less than 30% water, by mass	1354	4.1	
TRINITROBENZENE-SULPHONIC ACID	0386	1	
TRINITROBENZOIC ACID, dry or wetted with less than 30% water, by mass	0215	1	
TRINITROBENZOIC ACID, wetted with not less than 10% water, by mass	3368	4.1	
TRINITROBENZOIC ACID, WETTED with not less than 30% water, by mass	1355	4.1	
TRINITROCHLOROBENZENE	0155	1	
TRINITROCHLOROBENZENE wetted with not less than 10% water, by mass	3365	4.1	

Name and description	UN No.	Class	Remarks
TRINITRO-m-CRESOL	0216	1	
TRINITROFLUORENONE	0387	1	
TRINITRONAPHTHALENE	0217	1	
TRINITROPHENETOLE	0218	1	
TRINITROPHENOL, dry or wetted with less than 30% water, by mass	0154	1	
TRINITROPHENOL, WETTED with not less than 30% water, by mass	1344	4.1	
TRINITROPHENOL wetted with not less than 10% water, by mass	3364	4.1	
TRINITROPHENYL-METHYLNITRAMINE	0208	1	
TRINITRORESORCINOL, dry or wetted with less than 20% water, or mixture of alcohol and water, by mass	0219	1	
TRINITRORESORCINOL, WETTED with not less than 20% water, or mixture of alcohol and water, by mass	0394	1	
TRINITROTOLUENE (TNT), dry or wetted with less than 30% water, by mass	0209	1	
TRINITROTOLUENE AND HEXANITROSTILBENE MIXTURE	0388	1	
TRINITROTOLUENE MIXTURE CONTAINING TRINITROBENZENE AND HEXANITROSTILBENE	0389	1	
TRINITROTOLUENE AND TRINITROBENZENE MIXTURE	0388	1	
TRINITROTOLUENE, wetted with not less than 10% water, by mass	3366	4.1	
TRINITROTOLUENE, WETTED with not less than 30% water, by mass	1356	4.1	
TRIPROPYLAMINE	2260	3	
TRIPROPYLENE	2057	3	
TRIS-(1-AZIRIDINYL) PHOSPHINE OXIDE SOLUTION	2501	6.1	
TRITONAL	0390	1	
Tropilidene, see	2603	3	
TUNGSTEN HEXAFLUORIDE	2196	2	
TURPENTINE	1299	3	
TURPENTINE SUBSTITUTE	1300	3	
UNDECANE	2330	3	
UREA HYDROGEN PEROXIDE	1511	5.1	
UREA NITRATE, dry or wetted with less than 20% water, by mass	0220	1	
UREA NITRATE, wetted with not less than 10% water, by mass	3370	4.1	
UREA NITRATE, WETTED with not less than 20% water, by mass	1357	4.1	
Valeral, see	2058	3	
VALERALDEHYDE	2058	3	
n-Valeraldehyde, see	2058	3	
Valeric aldehyde, see	2058	3	
VALERYL CHLORIDE	2502	8	
VANADIUM COMPOUND, N.O.S.	3285	6.1	
Vanadium (IV) oxide sulphate, see	2931	6.1	
Vanadium oxysulphate, see	2931	6.1	
VANADIUM OXYTRICHLORIDE	2443	8	
VANADIUM PENTOXIDE, non-fused form	2862	6.1	
VANADIUM TETRACHLORIDE	2444	8	
VANADIUM TRICHLORIDE	2475	8	
VANADYL SULPHATE	2931	6.1	
Vehicle, flammable gas powered or vehicle, flammable liquid powered	3166	9	Not subject to ADR
Villiaumite, see	1690	6.1	
VINYL ACETATE, STABILIZED	1301	3	
Vinylbenzene, see	2055	3	
VINYL BROMIDE, STABILIZED	1085	2	
VINYL BUTYRATE, STABILIZED	2838	3	
VINYL CHLORIDE, STABILIZED	1086	2	

Name and description	UN No.	Class	Remarks
VINYL CHLOROACETATE	2589	6.1	
VINYL ETHYL ETHER, STABILIZED	1302	3	
VINYL FLUORIDE, STABILIZED	1860	2	
VINYLIDENE CHLORIDE, STABILIZED	1303	3	
VINYL ISOBUTYL ETHER, STABILIZED	1304	3	
VINYL METHYL ETHER, STABILIZED	1087	2	
VINYLPYRIDINES, STABILIZED	3073	6.1	
VINYLTOLUENES, STABILIZED	2618	3	
VINYLTRICHLOROSILANE	1305	3	
Warheads for guided missiles, see	0286 0287 0369 0370 0371	1 1 1 1 1	
WARHEADS, ROCKET with burster or expelling charge	0370 0371	1 1	
WARHEADS, ROCKET with bursting charge	0286 0287 0369	1 1 1	
WARHEADS, TORPEDO with bursting charge	0221	1	
Water gas, see	2600	2	
WATER-REACTIVE LIQUID, N.O.S.	3148	4.3	
WATER-REACTIVE LIQUID, CORROSIVE, N.O.S.	3129	4.3	
WATER-REACTIVE LIQUID, TOXIC, N.O.S.	3130	4.3	
WATER-REACTIVE SOLID, N.O.S.	2813	4.3	
WATER-REACTIVE SOLID, CORROSIVE, N.O.S.	3131	4.3	
WATER-REACTIVE SOLID, FLAMMABLE, N.O.S.	3132	4.3	Carriage prohi-bited
WATER-REACTIVE SOLID, OXIDIZING, N.O.S.	3133	4.3	Carriage prohi-bited
WATER-REACTIVE SOLID, SELF-HEATING, N.O.S.	3135	4.3	Carriage prohi-bited
WATER-REACTIVE SOLID, TOXIC, N.O.S.	3134	4.3	
White arsenic, see	1561	6.1	
WHITE ASBESTOS (chrysotile, actinolite, anthophyllite, tremolite)	2590	9	
White spirit, see	1300	3	
WOOD PRESERVATIVES, LIQUID	1306	3	
Wool waste, wet	1387	4.2	Not subject to ADR
XANTHATES	3342	4.2	
XENON	2036	2	
XENON, REFRIGERATED LIQUID	2591	2	
XYLENES	1307	3	
XYLENOLS, LIQUID	3430	6.1	
XYLENOLS, SOLID	2261	6.1	
XYLIDINES, LIQUID	1711	6.1	
XYLIDINES, SOLID	3452	6.1	
Xylols, see	1307	3	
XYLYL BROMIDE, LIQUID	1701	6.1	
XYLYL BROMIDE, SOLID	3417	6.1	
ZINC AMMONIUM NITRITE	1512	5.1	
ZINC ARSENATE	1712	6.1	
ZINC ARSENATE AND ZINC ARSENITE MIXTURE	1712	6.1	
ZINC ARSENITE	1712	6.1	
ZINC ASHES	1435	4.3	
Zinc bisulphite solution, see	2693	8	
ZINC BROMATE	2469	5.1	
ZINC CHLORATE	1513	5.1	
ZINC CHLORIDE, ANHYDROUS	2331	8	
ZINC CHLORIDE SOLUTION	1840	8	
ZINC CYANIDE	1713	6.1	
ZINC DITHIONITE	1931	9	
ZINC DUST	1436	4.3	
ZINC FLUOROSILICATE	2855	6.1	
Zinc hexafluorosilicate, see	2855	6.1	
ZINC HYDROSULPHITE, see	1931	9	
ZINC NITRATE	1514	5.1	

Name and description	UN No.	Class	Remarks
ZINC PERMANGANATE	1515	5.1	
ZINC PEROXIDE	1516	5.1	
ZINC PHOSPHIDE	1714	4.3	
ZINC POWDER	1436	4.3	
ZINC RESINATE	2714	4.1	
Zinc selenate, see	2630	4.1	
Zinc selenite, see	2630	4.1	
Zinc silicofluoride, see	2855	6.1	
ZIRCONIUM, DRY, coiled wire, finished metal sheets, strip (thinner than 254 microns but not thinner than 18 microns)	2858	4.1	
ZIRCONIUM, DRY, finished sheets, strip or coiled wire	2009	4.2	
ZIRCONIUM HYDRIDE	1437	4.1	
ZIRCONIUM NITRATE	2728	5.1	
ZIRCONIUM PICRAMATE, dry or wetted with less than 20% water, by mass	0236	1	
ZIRCONIUM PICRAMATE, WETTED with not less than 20% water, by mass	1517	4.1	
ZIRCONIUM POWDER, DRY	2008	4.2	
ZIRCONIUM POWDER, WETTED with not less than 25% water	1358	4.1	
ZIRCONIUM SCRAP	1932	4.2	
ZIRCONIUM SUSPENDED IN A FLAMMABLE LIQUID	1308	3	
ZIRCONIUM TETRACHLORIDE	2503	8	

ANNEX A

GENERAL PROVISIONS AND PROVISIONS CONCERNING DANGEROUS SUBSTANCES AND ARTICLES

(cont'd)

PART 3

Dangerous goods list, special provisions and exemptions related to dangerous goods packed in limited quantities

(cont'd)

CHAPTER 3.3

SPECIAL PROVISIONS APPLICABLE TO CERTAIN ARTICLES OR SUBSTANCES

3.3.1 When Column (6) of Table A of Chapter 3.2 indicates that a special provision is relevant to a substance or article, the meaning and requirements of that special provision are as set forth below.

16 Samples of new or existing explosive substances or articles may be carried as directed by the competent authorities (see 2.2.1.1.3) for purposes including: testing, classification, research and development, quality control, or as a commercial sample. Explosive samples which are not wetted or desensitized shall be limited to 10 kg in small packages as specified by the competent authorities. Explosive samples which are wetted or desensitized shall be limited to 25 kg.

23 Even though this substance has a flammability hazard, it only exhibits such hazard under extreme fire conditions in confined areas.

32 This substance is not subject to the requirements of ADR when in any other form.

37 This substance is not subject to the requirements of ADR when coated.

38 This substance is not subject to the requirements of ADR when it contains not more than 0.1% calcium carbide.

39 This substance is not subject to the requirements of ADR when it contains less than 30% or not less than 90% silicon.

43 When offered for carriage as pesticides, these substances shall be carried under the relevant pesticide entry and in accordance with the relevant pesticide provisions (see 2.2.61.1.10 to 2.2.61.1.11.2).

45 Antimony sulphides and oxides which contain not more than 0.5% of arsenic calculated on the total mass are not subject to the requirements of ADR.

47 Ferricyanides and ferrocyanides are not subject to the requirements of ADR.

48 The carriage of this substance, when it contains more than 20% hydrocyanic acid, is prohibited.

59 These substances are not subject to the requirements of ADR when they contain not more than 50% magnesium.

60 If the concentration is more than 72%, the carriage of this substance is prohibited.

61 The technical name which shall supplement the proper shipping name shall be the ISO common name (see also ISO 1750:1981 "*Pesticides and other agrochemicals - common names*", as amended), other name listed in the WHO "*Recommended Classification of Pesticides by Hazard and Guidelines to Classification*" or the name of the active substance (see also 3.1.2.8.1 and 3.1.2.8.1.1).

62 This substance is not subject to the requirements of ADR when it contains not more than 4% sodium hydroxide.

65 Hydrogen peroxide aqueous solutions with less than 8% hydrogen peroxide are not subject to the requirements of ADR.

103 The carriage of ammonium nitrites and mixtures of an inorganic nitrite with an ammonium salt is prohibited.

105 Nitrocellulose meeting the descriptions of UN No. 2556 or UN No. 2557 may be classified in Class 4.1.

113 The carriage of chemically unstable mixtures is prohibited.

119 Refrigerating machines include machines or other appliances which have been designed for the specific purpose of keeping food or other items at a low temperature in an internal compartment, and air conditioning units. Refrigerating machines and refrigerating machine components are not subject to the provisions of ADR if they contain less than 12 kg of gas in Class 2, group A or O according to 2.2.2.1.3, or if they contain less than 12 litres ammonia solution (UN No. 2672).

122 The subsidiary risks, control and emergency temperatures if any, and the UN number (generic entry) for each of the currently assigned organic peroxide formulations are given in 2.2.52.4.

127 Other inert material or inert material mixture may be used, provided this inert material has identical phlegmatizing properties.

131 The phlegmatized substance shall be significantly less sensitive than dry PETN.

135 The dihydrated sodium salt of dichloroisocyanuric acid is not subject to the requirements of ADR.

138 p-Bromobenzyl cyanide is not subject to the requirements of ADR.

141 Products which have undergone sufficient heat treatment so that they present no hazard during carriage are not subject to the requirements of ADR.

142 Solvent extracted soya bean meal containing not more than 1.5% oil and 11% moisture, which is substantially free of flammable solvent, is not subject to the requirements of ADR.

144 An aqueous solution containing not more than 24% alcohol by volume is not subject to the requirements of ADR.

145 Alcoholic beverages of packing group III, when carried in receptacles of 250 litres or less, are not subject to the requirements of ADR.

152 The classification of this substance will vary with particle size and packaging, but borderlines have not been experimentally determined. Appropriate classifications shall be made in accordance with 2.2.1.

153 This entry applies only if it is demonstrated, on the basis of tests, that the substances when in contact with water are not combustible nor show a tendency to auto-ignition and that the mixture of gases evolved is not flammable.

162 Mixtures with a flash-point of not more than 61 °C shall bear a label conforming to model No. 3.

163 A substance mentioned by name in Table A of Chapter 3.2 shall not be carried under this entry. Substances carried under this entry may contain 20% or less nitrocellulose provided the nitrocellulose contains not more than 12.6% nitrogen (by dry mass).

168 Asbestos which is immersed or fixed in a natural or artificial binder (such as cement, plastics, asphalt, resins or mineral ore) in such a way that no escape of hazardous quantities of respirable asbestos fibres can occur during carriage is not subject to the requirements of ADR. Manufactured articles containing asbestos and not meeting this provision are nevertheless not subject to the requirements of ADR when packed so that no escape of hazardous quantities of respirable asbestos fibres can occur during carriage.

169 Phthalic anhydride in the solid state and tetrahydrophthalic anhydrides, with not more than 0.05% maleic anhydride, are not subject to the requirements of ADR. Phthalic anhydride molten at a temperature above its flash-point, with not more than 0.05% maleic anhydride, shall be classified under UN No. 3256.

172 For radioactive material with a subsidiary risk :

(a) The packages shall be labelled with a label corresponding to each subsidiary risk exhibited by the material; corresponding placards shall be affixed to vehicles or containers in accordance with the relevant provisions of 5.3.1;

(b) The radioactive material shall be allocated to packing groups I, II or III, as and if appropriate, by application of the grouping criteria provided in Part 2 corresponding to the nature of the predominant subsidiary risk.

The description required in 5.4.1.2.5.1 (b) shall include a description of these subsidiary risks (e.g. "Subsidiary risk: 3, 6.1"), the name of the constituents which most predominantly contribute to this (these) subsidiary risk(s), and where applicable, the packing group.

177 Barium sulphate is not subject to the requirements of ADR.

178 This designation shall be used only when no other appropriate designation exists in Table A of Chapter 3.2, and only with the approval of the competent authority of the country of origin (see 2.2.1.1.3).

181 Packages containing this type of substance shall bear a label conforming to model No. 1 unless the competent authority of the country of origin has permitted this label to be dispensed with for the specific packaging employed because test data have proved that the substance in this packaging does not exhibit explosive behaviour (see 5.2.2.1.9).

182 The group of alkali metals includes lithium, sodium, potassium, rubidium and caesium.

183 The group of alkaline earth metals includes magnesium, calcium, strontium and barium.

186 In determining the ammonium nitrate content, all nitrate ions for which a molecular equivalent of ammonium ions is present in the mixture shall be calculated as ammonium nitrate.

188 Lithium cells and batteries offered for carriage are not subject to other provisions of ADR if they meet the following:

(a) For a lithium metal or lithium alloy cell, the lithium content is not more than 1 g, and for a lithium-ion cell, the lithium-equivalent content is not more than 1.5 g;

(b) For a lithium metal or lithium alloy battery the aggregate lithium content is not more than 2 g, and for a lithium-ion battery, the aggregate lithium-equivalent content is not more than 8 g;

(c) Each cell or battery is of the type proved to meet the requirements of each test in the *Manual of Tests and Criteria*, Part III, sub-section 38.3;

(d) Cells and batteries are separated so as to prevent short circuits and are packed in strong packagings, except when installed in equipment; and

(e) Except when installed in equipment, each package containing more than 24 lithium cells or 12 lithium batteries shall in addition meet the following requirements:

(i) Each package shall be marked indicating that it contains lithium batteries and that special procedures should be followed in the event that the package is damaged;

(ii) Each shipment shall be accompanied with a document indicating that packages contain lithium batteries and that special procedures should be followed in the event a package is damaged;

(iii) Each package is capable of withstanding a 1.2 m drop test in any orientation without damage to cells or batteries contained therein, without shifting of the contents so as to allow battery to battery (or cell to cell) contact and without release of contents; and

(iv) Except in the case of lithium batteries packed with equipment, packages may not exceed 30 kg gross mass.

As used above and elsewhere in ADR, "lithium content" means the mass of lithium in the anode of a lithium metal or lithium alloy cell, except in the case of a lithium-ion cell the "lithium-equivalent content" in grams is calculated to be 0.3 times the rated capacity in ampere-hours.

190 Aerosol dispensers shall be provided with protection against inadvertent discharge. Aerosols with a capacity not exceeding 50 ml containing only non-toxic constituents are not subject to the requirements of ADR.

191 Receptacles, small, with a capacity not exceeding 50 ml, containing only non-toxic constituents are not subject to the requirements of ADR.

194 The control and emergency temperatures, if any, and the UN number (generic entry) for each of the currently assigned self-reactive substances are given in 2.2.41.4.

196 Formulations which in laboratory testing neither detonate in the cavitated state nor deflagrate, which show no effect when heated under confinement and which exhibit no explosive power may be carried under this entry. The formulation must also be thermally stable (i.e. the SADT is 60 °C or higher for a 50 kg package). Formulations not meeting these criteria shall be carried under the provisions of Class 5.2, (see 2.2.52.4).

198 Nitrocellulose solutions containing not more than 20% nitrocellulose may be carried as paint or printing ink, as applicable (see UN Nos. 1210, 1263 and 3066).

199 Lead compounds which, when mixed in a ratio of 1:1000 with 0.07M hydrochloric acid and stirred for one hour at a temperature of 23 °C ± 2 °C, exhibit a solubility of 5% or less are considered insoluble. See ISO 3711:1990 "*Lead chromate pigments and lead chromate - molybdate pigments - Specifications and methods of test*".

201 Lighters and lighter refills shall comply with the provisions of the country in which they were filled. They shall be provided with protection against inadvertent discharge. The liquid portion of the gas shall not exceed 85% of the capacity of the receptacle at 15 °C. The receptacles, including the closures, shall be capable of withstanding an internal pressure of twice the pressure of the liquefied petroleum gas at 55 °C. The valve mechanisms and ignition devices shall be securely sealed, taped or otherwise fastened or designed to prevent operation or leakage of the contents during carriage. Lighters shall not contain more than 10 g of liquefied petroleum gas. Lighter refills shall not contain more than 65 g of liquefied petroleum gas.

203 This entry shall not be used for polychlorinated biphenyls, liquid, UN No. 2315 and polychlorinated biphenyls, solid, UN No.3432.

204 Articles containing smoke-producing substance(s) corrosive according to the criteria for Class 8 shall be labelled with a label conforming to model No. 8.

205 This entry shall not be used for UN No. 3155 PENTACHLOROPHENOL.

207 Polymeric beads and moulding compounds may be made from polystyrene, poly(methyl methacrylate) or other polymeric material.

208 The commercial grade of calcium nitrate fertilizer, when consisting mainly of a double salt (calcium nitrate and ammonium nitrate) containing not more than 10% ammonium nitrate and at least 12% water of crystallization, is not subject to the requirements of ADR.

210 Toxins from plant, animal or bacterial sources which contain infectious substances, or toxins that are contained in infectious substances, shall be classified in Class 6.2.

215 This entry only applies to the technically pure substance or to formulations derived from it having an SADT higher than 75 °C and therefore does not apply to formulations which are self-reactive substances (for self-reactive substances, see 2.2.41.4). Homogeneous mixtures containing not more than 35% by mass of azodicarbonamide and at least 65% of inert substance are not subject to the requirements of ADR unless criteria of other classes are met.

216 Mixtures of solids which are not subject to the requirements of ADR and flammable liquids may be carried under this entry without first applying the classification criteria of Class 4.1, provided there is no free liquid visible at the time the substance is loaded or at the time the packaging, vehicle or container is closed. Sealed packets containing less than 10 ml of a packing group II or III flammable liquid absorbed into a solid material are not subject to ADR provided there is no free liquid in the packet.

217 Mixtures of solids which are not subject to the requirements of ADR and toxic liquids may be carried under this entry without first applying the classification criteria of Class 6.1, provided there is no free liquid visible at the time the substance is loaded or at the time the packaging, vehicle or container is closed. This entry shall not be used for solids containing a packing group I liquid.

218 Mixtures of solids which are not subject to the requirements of ADR and corrosive liquids may be carried under this entry without first applying the classification criteria of Class 8, provided there is no free liquid visible at the time the substance is loaded or at the time the packaging, vehicle or container is closed.

219 Genetically modified micro-organisms and genetically modified organisms which meet the definition of an infectious substance and the criteria for inclusion in Class 6.2 in accordance with section 2.2.62 shall be carried as UN No. 2814, UN No. 2900 or UN No. 3373, as appropriate.

220 Only the technical name of the flammable liquid component of this solution or mixture shall be shown in parentheses immediately following the proper shipping name.

221 Substances included under this entry shall not be of packing group I.

224 Unless it can be demonstrated by testing that the sensitivity of the substance in its frozen state is no greater than in its liquid state, the substance shall remain liquid during normal transport conditions. It shall not freeze at temperatures above -15 °C.

225 Fire extinguishers under this entry may include installed actuating cartridges (cartridges, power device of classification code 1.4C or 1.4S), without changing the classification of Class 2, group A or O according to 2.2.2.1.3 provided the total quantity of deflagrating (propellant) explosives does not exceed 3.2 g per extinguishing unit.

226 Formulations of this substance containing not less than 30% non-volatile, non-flammable phlegmatizer are not subject to the requirements of ADR.

227 When phlegmatized with water and inorganic inert material the content of urea nitrate may not exceed 75% by mass and the mixture shall not be capable of being detonated by the Series 1, type (a), test in the *Manual of Tests and Criteria*, Part 1.

228 Mixtures not meeting the criteria for flammable gases (see 2.2.2.1.5) shall be carried under UN No. 3163.

230 This entry applies to cells and batteries containing lithium in any form, including lithium polymer and lithium ion cells and batteries.

Lithium cells and batteries may be carried under this entry if they meet the following provisions:

(a) Each cell or battery is of the type proved to meet the requirements of each test of the *Manual of Tests and Criteria*, Part III, sub-section 38.3;

(b) Each cell and battery incorporates a safety venting device or is designed to preclude a violent rupture under normal conditions of carriage;

(c) Each cell and battery is equipped with an effective means of preventing external short circuits;

(d) Each battery containing cells or series of cells connected in parallel is equipped with effective means as necessary to prevent dangerous reverse current flow (e.g. diodes, fuses, etc.).

235 This entry applies to articles which contain Class 1 explosive substances and which may also contain dangerous goods of other classes. These articles are used as life-saving vehicle air bag inflators or air bag modules or seat-belt pretensioners.

236 Polyester resin kits consist of two components: a base material (Class 3, packing group II or III) and an activator (organic peroxide). The organic peroxide shall be type D, E or F, not requiring temperature control. Packing group shall be II or III, according to the criteria for Class 3, applied to the base material. The quantity limit referred to in Column (7) of Table A of Chapter 3.2 applies to the base material.

237 The membrane filters, including paper separators, coating or backing materials, etc., that are present in carriage, shall not be liable to propagate a detonation as tested by one of the tests described in the *Manual of Tests and Criteria*, Part I, Test series 1 (a).

In addition the competent authority may determine, on the basis of the results of suitable burning rate tests taking account of the standard tests in the *Manual of Tests and Criteria*, Part III, sub-section 33.2.1, that nitrocellulose membrane filters in the form in which they are to be carried are not subject to the requirements applicable to flammable solids in Class 4.1.

238 (a) Batteries can be considered as non-spillable provided that they are capable of withstanding the vibration and pressure differential tests given below, without leakage of battery fluid.

Vibration test: The battery is rigidly clamped to the platform of a vibration machine and a simple harmonic motion having an amplitude of 0.8 mm (1.6 mm maximum total excursion) is applied. The frequency is varied at the rate of 1 Hz/min between the limits of 10 Hz and 55 Hz. The entire range of frequencies and return is traversed in 95 ± 5 minutes for each mounting position (direction of vibration) of the battery. The battery is tested in three mutually perpendicular positions (to include testing with fill openings and vents, if any, in an inverted position) for equal time periods.

Pressure differential test: Following the vibration test, the battery is stored for six hours at 24 °C ± 4 °C while subjected to a pressure differential of at least 88 kPa. The battery is tested in three mutually perpendicular positions (to include testing with fill openings and vents, if any, in an inverted position) for at least six hours in each position.

(b) Non-spillable batteries are not subject to the requirements of ADR if, at a temperature of 55 °C, the electrolyte will not flow from a ruptured or cracked case and there is no free liquid to flow and if, as packaged for carriage, the terminals are protected from short circuit.

239 Batteries or cells shall not contain dangerous substances other than sodium, sulphur and/or polysulphides. Batteries or cells shall not be offered for carriage at a temperature such that liquid elemental sodium is present in the battery or cell unless approved and under the conditions established by the competent authority of the country of origin. If the country of origin is not a Contracting Party to ADR, the approval and conditions of carriage shall be recognized by the competent authority of the first country Contracting Party to ADR reached by the consignment.

Cells shall consist of hermetically sealed metal casings which fully enclose the dangerous substances and which are so constructed and closed as to prevent the release of the dangerous substances under normal conditions of carriage.

Batteries shall consist of cells secured within and fully enclosed by a metal casing so constructed and closed as to prevent the release of the dangerous substances under normal conditions of carriage.

241 The formulation shall be prepared so that it remains homogeneous and does not separate during carriage. Formulations with low nitrocellulose contents and not showing dangerous properties when tested for their liability to detonate, deflagrate or explode when heated under defined confinement by tests of Test series 1 (a), 2 (b) and 2 (c) respectively in the *Manual of Tests and Criteria*, Part I and not being a flammable solid when tested in accordance with test No. 1 in the *Manual of Tests and Criteria*, Part III, sub-section 33.2.1.4 (chips, if necessary, crushed and sieved to a particle size of less than 1.25 mm) are not subject to the requirements of ADR.

242 Sulphur is not subject to the requirements of ADR when it has been formed to a specific shape (e.g. prills, granules, pellets, pastilles or flakes).

243 Gasoline, motor spirit and petrol for use in spark-ignition engines (e.g. in automobiles, stationary engines and other engines) shall be assigned to this entry regardless of variations in volatility.

244 This entry includes e.g. aluminium dross, aluminium skimmings, spent cathodes, spent potliner, and aluminium salt slags.

247 Alcoholic beverages containing more than 24% alcohol but not more than 70% by volume, when carried as part of the manufacturing process, may be carried in wooden casks with a capacity of not more than 500 litres deviating from the requirements of Chapter 6.1, on the following conditions:

(a) The casks shall be checked and tightened before filling;

(b) Sufficient ullage (not less than 3%) shall be left to allow for the expansion of the liquid;

(c) The casks shall be carried with the bungholes pointing upwards;

(d) The casks shall be carried in containers meeting the requirements of the CSC. Each cask shall be secured in custom-made cradles and be wedged by appropriate means to prevent it from being displaced in any way during carriage.

249 Ferrocerium, stabilized against corrosion, with a minimum iron content of 10% is not subject to the requirements of ADR.

250 This entry may only be used for samples of chemicals taken for analysis in connection with the implementation of the Convention on the Prohibition of the Development, Production, Stockpiling and Use of Chemical Weapons and on their Destruction. The carriage of substances under this entry shall be in accordance with the chain of custody and security procedures specified by the Organisation for the Prohibition of Chemical Weapons.

The chemical sample may only be carried providing prior approval has been granted by the competent authority or the Director General of the Organisation for the Prohibition of Chemical Weapons and providing the sample complies with the following provisions:

(a) It shall be packed according to packing instruction 623 in the ICAO Technical Instructions (see S-3-8 of the Supplement); and

(b) During carriage, a copy of the document of approval for transport, showing the quantity limitations and the packing provisions shall be attached to the transport document.

251 The entry CHEMICAL KIT or FIRST AID KIT is intended to apply to boxes, cases etc. containing small quantities of various dangerous goods which are used for medical, analytical or testing purposes. Such kits may not contain dangerous goods for which the code "LQ0" has been indicated in Column (7) of Table A of Chapter 3.2.

Components shall not react dangerously (see "dangerous reaction" in 1.2.1). The total quantity of dangerous goods in any one kit shall not exceed either 1 *l* or 1 kg. The packing group assigned to the kit as a whole shall be the most stringent packing group assigned to any individual substance in the kit.

Kits which are carried on board vehicles for first-aid or operating purposes are not subject to the requirements of ADR.

Chemical kits and first aid kits containing dangerous goods in inner packagings which do not exceed the quantity limits applicable to individual substances as specified in Column (7) of Table A of Chapter 3.2 in accordance with the LQ code defined in 3.4.6 may be carried in accordance with Chapter 3.4.

252 Provided the ammonium nitrate remains in solution under all conditions of carriage, aqueous solutions of ammonium nitrate, with not more than 0.2% combustible material, in a concentration not exceeding 80%, are not subject to the requirements of ADR.

266 This substance, when containing less alcohol, water or phlegmatizer than specified, shall not be carried unless specifically authorized by the competent authority (see 2.2.1.1).

267 Any explosives, blasting, type C containing chlorates shall be segregated from explosives containing ammonium nitrate or other ammonium salts.

270 Aqueous solutions of Class 5.1 inorganic solid nitrate substances are considered as not meeting the criteria of Class 5.1 if the concentration of the substances in solution at the minimum temperature encountered during carriage is not greater than 80% of the saturation limit.

271 Lactose or glucose or similar materials, may be used as a phlegmatizer provided that the substance contains not less than 90%, by mass, of phlegmatizer. The competent authority may authorize these mixtures to be classified in Class 4.1 on the basis of a test Series 6(c) of Section 16 of Part I of the *Manual of Tests and Criteria* on at least three packages as prepared for carriage. Mixtures containing at least 98%, by mass, of phlegmatizer are not subject to the requirements of ADR. Packages containing mixtures with not less than 90%, by mass, of phlegmatizer need not bear a label conforming to model No. 6.1.

272 This substance shall not be carried under the provisions of Class 4.1 unless specifically authorized by the competent authority (see UN No. 0143).

273 Maneb and maneb preparations stabilized against self-heating need not be classified in Class 4.2 when it can be demonstrated by testing that a cubic volume of 1 m^3 of substance does not self-ignite and that the temperature at the centre of the sample does not exceed 200 °C, when the sample is maintained at a temperature of not less than 75 °C ± 2 °C for a period of 24 hours.

274 The provisions of 3.1.2.8 apply.

278 These substances shall not be classified and carried unless authorized by the competent authority on the basis of results from Series 2 tests and a Series 6(c) test of Part I of the *Manual of Tests and Criteria* on packages as prepared for carriage (see 2.2.1.1). The competent authority shall assign the packing group on the basis of 2.2.3 criteria and the package type used for the Series 6(c) test.

279 The substance is assigned to this classification or packing group based on human experience rather than the strict application of classification criteria set out in ADR.

280 This entry applies to articles which are used as life-saving vehicle air bag inflators, or air bag modules or seat-belt pretensioners and which contain dangerous goods of Class 1 or dangerous goods of other classes and when carried as component parts and when these articles as presented for carriage have been tested in accordance with Test series 6 (c) of Part I of the *Manual of Tests and Criteria*, with no explosion of the device, no fragmentation of device casing or pressure vessel, and no projection hazard nor thermal effect which would significantly hinder fire-fighting or other emergency response efforts in the immediate vicinity.

282 Suspensions with a flash-point of not more than 61 °C, shall bear a label conforming to model No. 3.

283 Articles, containing gas, intended to function as shock absorbers, including impact energy-absorbing devices, or pneumatic springs are not subject to the requirements of ADR provided:

(a) Each article has a gas space capacity not exceeding 1.6 litres and a charge pressure not exceeding 280 bar where the product of the capacity (litres) and charge pressure (bars) does not exceed 80 (i.e. 0.5 litres gas space and 160 bar charge pressure, 1 litre gas space and 80 bar charge pressure, 1.6 litres gas space and 50 bar charge pressure, 0.28 litres gas space and 280 bar charge pressure);

(b) Each article has a minimum burst pressure of 4 times the charge pressure at 20 °C for products not exceeding 0.5 litres gas space capacity and 5 times charge pressure for products greater than 0.5 litres gas space capacity;

(c) Each article is manufactured from material which will not fragment upon rupture;

(d) Each article is manufactured in accordance with a quality assurance standard acceptable to the competent authority; and

(e) The design type has been subjected to a fire test demonstrating that the article relieves its pressure by means of a fire degradable seal or other pressure relief device, such that the article will not fragment and that the article does not rocket.

See also 1.1.3.2 (d) for equipment used for the operation of the vehicle.

284 An oxygen generator, chemical, containing oxidizing substances shall meet the following conditions:

(a) The generator when containing an explosive actuating device shall only be carried under this entry when excluded from Class 1 in accordance with the NOTE under paragraph 2.2.1.1.1 (b);

(b) The generator, without its packaging, shall be capable of withstanding a 1.8 m drop test onto a rigid, non-resilient, flat and horizontal surface, in the position most likely to cause damage, without loss of its contents and without actuation;

(c) When a generator is equipped with an actuating device, it shall have at least two positive means of preventing unintentional actuation.

286 Nitrocellulose membrane filters covered by this entry, each with a mass not exceeding 0.5 g, are not subject to the requirements of ADR when contained individually in an article or a sealed packet.

288 These substances shall not be classified and carried unless authorized by the competent authority on the basis of results from Series 2 tests and a Series 6(c) test of Part I of the *Manual of tests and Criteria* on packages as prepared for carriage (see 2.2.1.1).

289 Air bags or seat-belts installed in vehicles or in completed vehicle components such as steering columns, door panels, seats, etc. are not subject to the requirements of ADR.

290 When this material meets the definitions and criteria of other classes as defined in Part 2, it shall be classified in accordance with the predominant subsidiary risk. Such material shall be declared under the proper shipping name and UN number appropriate for the material in that predominant Class, with the addition of the name applicable to this material according to Column (2) of Table A of Chapter 3.2, and shall be carried in accordance with the provisions applicable to that UN number. In addition, all other requirements specified in 2.2.7.9.1 shall apply, except 5.2.1.7.2.

291 Flammable liquefied gases shall be contained within refrigerating machine components. These components shall be designed and tested to at least three times the working pressure of the machinery. The refrigerating machines shall be designed and constructed to contain the liquefied gas and preclude the risk of bursting or cracking of the pressure retaining components during normal conditions of carriage. Refrigerating machines and refrigerating-machine components are not subject to the requirements of ADR if they contain less than 12 kg of gas.

292 Only mixtures with not more than 23.5% oxygen may be carried under this entry. A label conforming to model No. 5.1 is not required for any concentrations within this limit.

293 The following definitions apply to matches:

(a) Fusee matches are matches the heads of which are prepared with a friction-sensitive igniter composition and a pyrotechnic composition which burns with little or no flame, but with intense heat;

(b) Safety matches are matches which are combined with or attached to the box, book or card that can be ignited by friction only on a prepared surface;

(c) Strike anywhere matches are matches that can be ignited by friction on a solid surface;

(d) Wax Vesta matches are matches that can be ignited by friction either on a prepared surface or on a solid surface.

295 Batteries need not be individually marked and labelled if the pallet bears the appropriate mark and label.

296 These entries apply to life-saving appliances such as life rafts, personal flotation devices and self-inflating slides. UN No. 2990 applies to self-inflating appliances and UN No. 3072 applies to life-saving appliances that are not self-inflating. Life-saving appliances may contain:

(a) Signal devices (Class 1) which may include smoke and illumination signal flares packed in packagings that prevent them from being inadvertently activated;

(b) For UN No. 2990 only, cartridges, power device of Division 1.4, compatibility group S, may be contained for purposes of the self-inflating mechanism and provided that the quantity of explosives per appliance does not exceed 3.2 g;

(c) Class 2 compressed gases, group A or O, according to 2.2.2.1.3;

(d) Electric storage batteries (Class 8) and lithium batteries (Class 9);

(e) First aid kits or repair kits containing small quantities of dangerous goods (e.g.: substances of Class 3, 4.1, 5.2, 8 or 9); or

(f) "Strike anywhere" matches packed in packagings that prevent them from being inadvertently activated.

298 Solutions with a flash point of 61 °C or less shall bear a label conforming to model No. 3.

300 Fish meal or fish scrap shall not be loaded if the temperature at the time of loading exceeds 35 °C or 5 °C above the ambient temperature whichever is higher.

302 In the proper shipping name, the word "UNIT" means:

a vehicle;
a container; or
a tank.

Fumigated vehicles, containers and tanks are only subject to the provisions of 5.5.2.

303 The classification of these receptacles (UN No. 2037) shall be based on the gases contained therein and in accordance with the provisions of 2.2.2.

304 Batteries, dry, containing corrosive electrolyte which will not flow out of the battery if the battery case is cracked are not subject to the requirements of ADR provided the batteries are securely packed and protected against short-circuits. Examples of such batteries are: alkali-manganese, zinc-carbon, nickel-metal hydride and nickel-cadmium batteries.

305 These substances are not subject to the requirements of ADR when in concentrations of not more than 50 mg/kg.

306 This entry may only be used for substances that do not exhibit explosive properties of Class 1 when tested in accordance to Test Series 1 and 2 of Class 1 (see *Manual of Tests and Criteria*, Part I).

307 This entry may only be used for uniform mixtures containing ammonium nitrate as the main ingredient within the following composition limits:

(a) Not less than 90% ammonium nitrate with not more than 0.2% total combustible/organic material calculated as carbon and with added matter, if any, which is inorganic and inert towards ammonium nitrate; or

(b) Less than 90% but more than 70% ammonium nitrate with other inorganic materials or more than 80% but less than 90% ammonium nitrate mixed with calcium carbonate and/or dolomite and not more than 0.4% total combustible/organic material calculated as carbon; or

(c) Nitrogen type ammonium nitrate based fertilizers containing mixtures of ammonium nitrate and ammonium sulphate with more than 45% but less than 70% ammonium nitrate and not more than 0.4% total combustible/organic material calculated as carbon such that the sum of the percentage compositions of ammonium nitrate and ammonium sulphate exceeds 70%.

309 This entry applies to non sensitised emulsions, suspensions and gels consisting primarily of a mixture of ammonium nitrate and a fuel phase, intended to produce a Type E blasting explosive only after further processing prior to use. The mixture typically has the following composition: 60 - 85% ammonium nitrate; 5 - 30% water; 2 - 8% fuel; 0.5 - 4% emulsifier or thickening agent; 0 - 10% soluble flame suppressants and trace additives. Other inorganic nitrate salts may replace part of the ammonium nitrate. These substances shall pass Test Series 8 of the *Manual of Tests and Criteria*, Part I, Section 18.

310 The testing requirements in sub-section 38.3 of the *Manual of Tests and Criteria* do not apply to production runs consisting of not more than 100 lithium cells and batteries, or to pre-production prototypes of lithium cells and batteries when these prototypes are carried for testing, if:

(a) the cells and batteries are carried in an outer packaging that is a metal, plastics or plywood drum or a metal, plastics or wooden box and that meets the criteria for packing group I; and

(b) each cell and battery is individually packed in an inner packaging inside an outer packaging and is surrounded by cushioning material that is non-combustible, and non-conductive.

311 Substances shall not be carried under this entry unless approved by the competent authority on the basis of the results of appropriate tests according to Part I of the *Manual of Tests and Criteria*. Packaging shall ensure that the percentage of diluent does not fall below that stated in the competent authority approval, at any time during carriage.

312 *(Reserved)*

313 Substances and mixtures meeting the criteria for Class 8 shall bear a subsidiary risk label conforming to model No. 8 (see 5.2.2.2.2).

314 (a) These substances are liable to exothermic decomposition at elevated temperatures. Decomposition can be initiated by heat or by impurities (e.g. powdered metals (iron, manganese, cobalt, magnesium) and their compounds);

(b) During the course of carriage, these substances shall be shaded from direct sunlight and all sources of heat and be placed in adequately ventilated areas.

315 This entry shall not be used for Class 6.1 substances which meet the inhalation toxicity criteria for packing group I described in 2.2.61.1.8.

316 This entry applies only to calcium hypochlorite, dry or hydrated, when carried in non friable tablet form.

317 "Fissile-excepted" applies only to those packages complying with 6.4.11.2.

318 For the purposes of documentation, the proper shipping name shall be supplemented with the technical name (see 3.1.2.8). When the infectious substances to be carried are unknown, but suspected of meeting the criteria for inclusion in category A and assignment to UN No. 2814 or 2900, the words "suspected category A infectious substance" shall be shown, in parentheses, following the proper shipping name on the transport document.

319 This entry applies to human or animal material including, but not limited to, excreta, secreta, blood and its components, tissue and tissue fluids, and body parts being carried for purposes such as research, diagnosis, investigational activities, disease treatment or prevention. Substances packed and packages which are marked in accordance with packing instruction P650 are not subject to any other requirements of ADR.

320 It is intended that this entry will be deleted from ADR on 1 January 2007. Irrespective of 2.1.2, in the interim period, this entry or the appropriate generic entry may be used.

321 These storage systems shall always be considered as containing hydrogen.

322-499 *(Reserved)*

500 UN No. 3064 nitroglycerin, solution in alcohol with more than 1% but not more than 5% nitroglycerin, packed in accordance with packing instruction P300 of 4.1.4.1, is a substance of Class 3.

501 For naphthalene, molten, see UN No. 2304.

502 UN No. 2006 plastics, nitrocellulose-based, self-heating, n.o.s., and 2002 celluloid scrap are substances of Class 4.2.

503 For phosphorus, white or yellow, molten, see UN No. 2447.

504 UN No. 1847 potassium sulphide, hydrated with not less than 30% water of crystallization, UN No. 1849 sodium sulphide, hydrated with not less than 30% water of crystallization and UN No. 2949 sodium hydrosulphide with not less than 25% water of crystallization are substances of Class 8.

505 UN No. 2004 magnesium diamide is a substance of Class 4.2.

506 Alkaline earth metals and alkaline earth metal alloys in pyrophoric form are substances of Class 4.2.

UN No. 1869 magnesium or magnesium alloys containing more than 50% magnesium as pellets, turnings or ribbons, are substances of Class 4.1.

507 UN No. 3048 aluminium phosphide pesticides, with additives inhibiting the emission of toxic flammable gases are substances of Class 6.1.

508 UN No. 1871 titanium hydride and UN No. 1437 zirconium hydride are substances of Class 4.1. UN No. 2870 aluminium borohydride is a substance of Class 4.2.

509 UN No. 1908 chlorite solution is a substance of Class 8.

510 UN No. 1755 chromic acid solution is a substance of Class 8.

511 UN No. 1625 mercuric nitrate, UN No. 1627 mercurous nitrate and UN No. 2727 thallium nitrate are substances of Class 6.1. Thorium nitrate, solid, uranyl nitrate hexahydrate solution and uranyl nitrate, solid are substances of Class 7.

512 UN No. 1730 antimony pentachloride, liquid, UN No. 1731 antimony pentachloride solution, UN No. 1732 antimony pentafluoride and UN No. 1733 antimony trichloride are substances of Class 8.

513 UN No. 0224 barium azide, dry or wetted with less than 50% water, by mass, is a substance of Class 1. UN No. 1571 barium azide, wetted with not less than 50% water, by mass, is a substance of Class 4.1. UN No. 1854 barium alloys, pyrophoric, are substances of Class 4.2. UN No. 1445 barium chlorate, solid, UN No. 1446 barium nitrate, UN No. 1447 barium perchlorate, solid, UN No. 1448 barium permanganate, UN No. 1449 barium peroxide, UN No. 2719 barium bromate, UN No. 2741 barium hypochlorite with more than 22% available chlorine, UN No. 3405 barium chlorate, solution and UN No. 3406 barium perchlorate, solution, are substances of Class 5.1. UN No. 1565 barium cyanide and UN No. 1884 barium oxide are substances of Class 6.1.

514 UN No. 2464 beryllium nitrate is a substance of Class 5.1.

515 UN No. 1581 chloropicrin and methyl bromide mixture and UN No. 1582 chloropicrin and methyl chloride mixture are substances of Class 2.

516 UN No. 1912 methyl chloride and methylene chloride mixture is a substance of Class 2.

517 UN No. 1690 sodium fluoride, solid, UN No. 1812 potassium fluoride, solid, UN No. 2505 ammonium fluoride, UN No. 2674 sodium fluorosilicate, UN No. 2856 fluorosilicates, n.o.s., UN No. 3415 sodium fluoride, solution and UN No. 3422 potassium fluoride, solution, are substances of Class 6.1.

518 UN No. 1463 chromium trioxide, anhydrous (chromic acid, solid) is a substance of Class 5.1.

519 UN No. 1048 hydrogen bromide, anhydrous, is a substance of Class 2.

520 UN No. 1050 hydrogen chloride, anhydrous, is a substance of Class 2.

521 Solid chlorites and hypochlorites are substances of Class 5.1.

522 UN No. 1873 perchloric acid aqueous solution with more than 50% but not more than 72% pure acid, by mass are substances of Class 5.1. Perchloric acid solutions containing more than 72% pure acid, by mass, or mixtures of perchloric acid with any liquid other than water, are not to be accepted for carriage.

523 UN No. 1382 anhydrous potassium sulphide and UN No. 1385 anhydrous sodium sulphide and their hydrates with less than 30% water of crystallization, and UN No. 2318 sodium hydrosulphide with less than 25% water of crystallization are substances of Class 4.2.

524 UN No. 2858 finished zirconium products of a thickness of 18 μm or more are substances of Class 4.1.

525 Solutions of inorganic cyanides with a total cyanide ion content of more than 30% shall be classified in packing group I, solutions with a total cyanide ion content of more than 3% and not more than 30% in packing group II and solutions with a cyanide ion content of more than 0.3% and not more than 3% in packing group III.

526 UN No. 2000 celluloid is assigned to Class 4.1.

528 UN No. 1353 fibres or fabrics impregnated with weakly nitrated cellulose, non-self heating are articles of Class 4.1.

529 UN No. 0135 mercury fulminate, wetted with not less than 20% water, or mixture of alcohol and water, by mass, is a substance of Class 1. Mercurous chloride (calomel) is a substance of Class 9 (UN No. 3077).

530 UN No. 3293 hydrazine, aqueous solution with not more than 37% hydrazine, by mass, is a substance of Class 6.1.

531 Mixtures having a flash-point below 23 °C and containing more than 55% nitrocellulose, whatever its nitrogen content or containing not more than 55% nitrocellulose with a nitrogen content above 12.6% (by dry mass), are substances of Class 1 (see UN Nos. 0340 or 0342) or of Class 4.1.

532 UN No. 2672 ammonia solution containing not less than 10% but not more than 35% ammonia is a substance of Class 8.

533 UN No. 1198 formaldehyde solutions, flammable are substances of Class 3. Formaldehyde solutions, non-flammable, with less than 25% formaldehyde are not subject to the requirements of ADR.

534 While in some climatic conditions, petrol (gasoline) may have a vapour pressure at 50 °C of more than 110 kPa (1.10 bar) but not more than 150 kPa (1.50 bar) it is to continue to be considered as a substance having a vapour pressure at 50 °C of not more than 110 kPa (1.10 bar).

535 UN No. 1469 lead nitrate, UN No. 1470 lead perchlorate, solid and UN No. 3408 lead perchlorate, solution, are substances of Class 5.1.

536 For naphthalene, solid, see UN No. 1334.

537 UN No. 2869 titanium trichloride mixture, not pyrophoric, is a substance of Class 8.

538 For sulphur (in the solid state), see UN No. 1350.

539 Solutions of isocyanates having a flash-point of not less than 23 °C are substances of Class 6.1.

540 UN No. 1326 hafnium powder, wetted, UN No. 1352 titanium powder, wetted or UN No. 1358 zirconium powder, wetted, with not less than 25% water, are substances of Class 4.1.

541 Nitrocellulose mixtures with a water content, alcohol content or plasticizer content lower than the stated limits are substances of Class 1.

542 Talc containing tremolite and/or actinolite is covered by this entry.

543 UN No. 1005 ammonia, anhydrous, UN No. 3318 ammonia solution with more than 50% ammonia and UN No. 2073 ammonia solution, with more than 35% but not more than 50% ammonia, are substances of Class 2. Ammonia solutions with not more than 10% ammonia are not subject to the requirements of ADR.

544 UN No. 1032 dimethylamine, anhydrous, UN No. 1036 ethylamine, UN No. 1061 methylamine, anhydrous and UN No. 1083 trimethylamine, anhydrous, are substances of Class 2.

545 UN No. 0401 dipicryl sulphide, wetted with less than 10% water by mass is a substance of Class 1.

546 UN No. 2009 zirconium, dry, finished sheets, strip or coiled wire, in thicknesses of less than 18 µm, is a substance of Class 4.2. Zirconium, dry, finished sheets, strip or coiled wire, in thicknesses of 254 µm or more, is not subject to the requirements of ADR.

547 UN No. 2210 maneb or UN No. 2210 maneb preparations in self-heating form are substances of Class 4.2.

548 Chlorosilanes which, in contact with water, emit flammable gases, are substances of Class 4.3.

549 Chlorosilanes having a flash-point of less than 23 °C and which, in contact with water, do not emit flammable gases are substances of Class 3. Chlorosilanes having a flash-point equal to or greater than 23 °C and which, in contact with water, do not emit flammable gases are substances of Class 8.

550 UN No. 1333 cerium in slabs, rods or ingots is a substance of Class 4.1.

551 Solutions of these isocyanates having a flash-point below 23 °C are substances of Class 3.

552 Metals and metal alloys in powdered or other flammable form, liable to spontaneous combustion, are substances of Class 4.2. Metals and metal alloys in powdered or other flammable form which, in contact with water, emit flammable gases are substances of Class 4.3.

553 This mixture of hydrogen peroxide and peroxyacetic acid shall, in laboratory testing (see *Manual of Tests and Criteria*, Part II, section 20), neither detonate in the cavitated state nor deflagrate at all and shall show no effect when heated under confinement nor any explosive power. The formulation shall be thermally stable (self-accelerating

decomposition temperature 60 °C or higher for a 50 kg package), and a liquid compatible with peroxyacetic acid shall be used for desensitization. Formulations not meeting these criteria are to be regarded as substances of Class 5.2 (see *Manual of Tests and Criteria*, Part II, paragraph 20.4.3(g)).

554 Metal hydrides which, in contact with water, emit flammable gases are substances of Class 4.3. UN No. 2870 aluminium borohydride or UN No. 2870 aluminium borohydride in devices is a substance of Class 4.2.

555 Dust and powder of metals in non-spontaneously combustible form, non-toxic which nevertheless, in contact with water, emit flammable gases, are substances of Class 4.3.

556 Organometallic compounds and their solutions which ignite spontaneously are substances of Class 4.2. Flammable solutions with organometallic compounds in concentrations which, in contact with water, neither emit flammable gases in dangerous quantities nor ignite spontaneously are substances of Class 3.

557 Dust and powder of metals in pyrophoric form are substances of Class 4.2.

558 Metals and metal alloys in pyrophoric form are substances of Class 4.2. Metals and metal alloys which, in contact with water, do not emit flammable gases and are not pyrophoric or self-heating, but which are easily ignited, are substances of Class 4.1.

559 Mixtures of a hypochlorite with an ammonium salt are not to be accepted for carriage. UN No. 1791 hypochlorite solution is a substance of Class 8.

560 UN No. 3257 elevated temperature liquid, n.o.s., at or above 100 °C and, for a substance with a flash-point, below its flash-point (including molten metals and molten salts) is a substance of Class 9.

561 Chloroformates having predominantly corrosive properties are substances of Class 8.

562 Spontaneously combustible organometallic compounds are substances of Class 4.2. Water-reactive organometallic compounds, flammable, are substances of Class 4.3.

563 UN No. 1905 selenic acid is a substance of Class 8.

564 UN No. 2443 vanadium oxytrichloride, UN No. 2444 vanadium tetrachloride and UN No. 2475 vanadium trichloride are substances of Class 8.

565 Unspecified wastes resulting from medical/veterinary treatment of humans/animals or from biological research, and which are unlikely to contain substances of Class 6.2 shall be assigned to this entry. Decontaminated clinical wastes or wastes resulting from biological research which previously contained infectious substances are not subject to the requirements of Class 6.2.

566 UN No. 2030 hydrazine aqueous solution, with more than 37% hydrazine, by mass, is a substance of Class 8.

567 Mixtures containing more than 21% oxygen by volume shall be classified as oxidizing.

568 Barium azide with a water content lower than the stated limit is a substance of Class 1, UN No. 0224.

569-579 *(Reserved)*

580 Tank-vehicles, specialized vehicles and specially equipped vehicles for carriage in bulk shall bear on both sides and at the rear the mark referred to in 5.3.3. Tank-containers, portable tanks, special containers and specially equipped containers for carriage in bulk shall bear this mark on both sides and at each end.

581 This entry covers mixtures of methylacetylene and propadiene with hydrocarbons, which as

Mixture P1, contain not more than 63% methylacetylene and propadiene by volume and not more than 24% propane and propylene by volume, the percentage of C_4-saturated hydrocarbons being not less than 14% by volume; and as

Mixture P2, contain not more than 48% methylacetylene and propadiene by volume and not more than 50% propane and propylene by volume, the percentage of C_4-saturated hydrocarbons being not less than 5% by volume,

as well as mixtures of propadiene with 1 to 4% methylacetylene.

When relevant, in order to meet the requirements for the transport document (5.4.1.1), the term "Mixture P1" or "Mixture P2" may be used as technical name.

582 This entry covers, inter alia, mixtures of gases indicated by the letter R ..., which as

Mixture F1, have a vapour pressure at 70 °C not exceeding 1.3 MPa (13 bar) and a density at 50 °C not lower than that of dichlorofluoromethane (1.30 kg/l);

Mixture F2, have a vapour pressure at 70 °C not exceeding 1.9 MPa (19 bar) and a density at 50 °C not lower than that of dichloridifluoromethane (1.21 kg/l);

Mixture F3, have a vapour pressure at 70 °C not exceeding 3 MPa (30 bar) and a density at 50 °C not lower than that of chlorodifluoromethane (1.09 kg/l).

NOTE: *Trichlorofluoromethane (refrigerant R 11), 1,1,2-trichloro-1,2,2-trifluoroethane (refrigerant R 113), 1,1,1-trichloro-2,2,2-trifluoroethane (refrigerant R 113a), 1-chloro-1,2,2-trifluoroethane (refrigerant R 133) and 1-chloro-1,1,2-trifluoroethane (refrigerant R 133 b) are not substances of Class 2. They may, however, enter into the composition of mixtures F 1 to F 3.*

When relevant, in order to meet the requirements for the transport document (5.4.1.1), the term "Mixture F1", "Mixture F2" or "Mixture F3" may be used as technical name.

583 This entry covers, inter alia, mixtures which as

Mixture A, have a vapour pressure at 70 °C not exceeding 1.1 MPa (11 bar) and a density at 50 °C not lower than 0.525 kg/l;

Mixture A01, have a vapour pressure at 70 °C not exceeding 1.6 MPa (16 bar) and a relative density at 50 °C not lower than 0.516 kg/l;

Mixture A02, have a vapour pressure at 70 °C not exceeding 1.6 MPa (16 bar) and a relative density at 50 °C not lower than 0.505 kg/l;

Mixture A0, have a vapour pressure at 70 °C not exceeding 1.6 MPa (16 bar) and a density at 50 °C not lower than 0.495 kg/l;

Mixture A1, have a vapour pressure at 70 °C not exceeding 2.1 MPa (21 bar) and a density at 50 °C not lower than 0.485 kg/l;

Mixture B1, have a vapour pressure at 70 °C not exceeding 2.6 MPa (26 bar) and a relative density at 50 °C not lower than 0.474 kg/l;

Mixture B2, have a vapour pressure at 70 °C not exceeding 2.6 MPa (26 bar) and a relative density at 50 °C not lower than 0.463 kg/l;

Mixture B, have a vapour pressure at 70 °C not exceeding 2.6 MPa (26 bar) and a density at 50 °C not lower than 0.450 kg/l;

Mixture C, have a vapour pressure at 70 °C not exceeding 3.1 MPa (31 bar) and a relative density at 50 °C not lower than 0.440 kg/l;

When relevant, in order to meet the requirements for the transport document (5.4.1.1), the following terms may be used as technical name:

- "Mixture A" or "Butane";
- "Mixture A01" or "Butane";
- "Mixture A02" or "Butane";
- "Mixture A0" or "Butane";
- "Mixture A1";
- "Mixture B1";
- "Mixture B2";
- "Mixture B";
- "Mixture C" or "Propane".

For carriage in tanks, the trade names "butane" or "propane" may be used only as a complement.

584 This gas is not subject to the requirements of ADR when:

- it is in the gaseous state;
- it contains not more than 0.5% air;
- it is contained in metal capsules (sodors, sparklets) free from defects which may impair their strength;
- the leakproofness of the closure of the capsule is ensured;
- a capsule contains not more than 25 g of this gas;
- a capsule contains not more than 0.75 g of this gas per cm^3 of capacity.

585 Cinnabar is not subject to the requirements of ADR.

586 Hafnium, titanium and zirconium powders shall contain a visible excess of water. Hafnium, titanium and zirconium powders, wetted, mechanically produced, of a particle size of 53 :m and over, or chemically produced, of a particle size of 840 :m and over, are not subject to the requirements of ADR.

587 Barium stearate and barium titanate are not subject to the requirements of ADR.

588 Solid hydrated forms of aluminium bromide and aluminium chloride are not subject to the requirements of ADR.

589 Calcium hypochlorite mixtures, dry, containing not more than 10% available chlorine are not subject to the requirements of ADR.

590 Ferric chloride hexahydrate is not subject to the requirements of ADR.

591 Lead sulphate with not more than 3% free acid is not subject to the requirements of ADR.

592 Uncleaned empty packagings (including empty IBCs and large packagings), empty tank-vehicles, empty demountable tanks, empty portable tanks, empty tank-containers and empty small containers which have contained this substance are not subject to the requirements of ADR.

593 This gas, intended for the cooling of e.g. medical or biological specimens, if contained in double wall receptacles which comply with the provisions of packing instruction P203 (12) of 4.1.4.1 is not subject to the requirements of ADR.

594 The following articles, manufactured and filled according to the regulations of the manufacturing State and packaged in strong outer packagings, are not subject to the requirements of ADR:

- UN No. 1044 fire extinguishers provided with protection against inadvertent discharge;

- UN No. 3164 articles, pressurized pneumatic or hydraulic, designed to withstand stresses greater than the internal gas pressure by virtue of transmission of force, intrinsic strength or construction.

596 Cadmium pigments, such as cadmium sulphides, cadmium sulphoselenides and cadmium salts of higher fatty acids (e.g. cadmium stearate), are not subject to the requirements of ADR.

597 Acetic acid solutions with not more than 10% pure acid by mass, are not subject to the requirements of ADR.

598 The following are not subject to the requirements of ADR:

(a) New storage batteries when:

- they are secured in such a way that they cannot slip, fall or be damaged;
- they are provided with carrying devices, unless they are suitably stacked, e.g. on pallets;
- there are no dangerous traces of alkalis or acids on the outside;
- they are protected against short circuits;

(b) Used storage batteries when:

- their cases are undamaged;
- they are secured in such a way that they cannot leak, slip, fall or be damaged, e.g. by stacking on pallets;
- there are no dangerous traces of alkalis or acids on the outside of the articles;
- they are protected against short circuits.

"Used storage batteries" means storage batteries carried for recycling at the end of their normal service life.

599 Manufactured articles or instruments containing not more than 1 kg of mercury are not subject to the requirements of ADR.

600 Vanadium pentoxide, fused and solidified, is not subject to the requirements of ADR.

601 Pharmaceutical products ready for use, e.g. cosmetics, drugs and medicines, which are substances manufactured and packed in packagings of a type intended for retail sale or distribution for personal or household consumption are not subject to the requirements of ADR.

602 Phosphorus sulphides which are not free from yellow and white phosphorus are not to be accepted for carriage.

603 Anhydrous hydrogen cyanide not meeting the description for UN No. 1051 or UN No. 1614 is not to be accepted for carriage. Hydrogen cyanide (hydrocyanic acid) containing less than 3% water is stable, if the pH-value is 2.5 ± 0.5 and the liquid is clear and colourless.

604 Ammonium bromate and its aqueous solutions and mixtures of a bromate with an ammonium salt are not to be accepted for carriage.

605 Ammonium chlorate and its aqueous solutions and mixtures of a chlorate with an ammonium salt are not to be accepted for carriage.

606 Ammonium chlorite and its aqueous solutions and mixtures of a chlorite with an ammonium salt are not to be accepted for carriage.

607 Mixtures of potassium nitrate and sodium nitrite with an ammonium salt are not to be accepted for carriage.

608 Ammonium permanganate and its aqueous solutions and mixtures of a permanganate with an ammonium salt are not to be accepted for carriage.

609 Tetranitromethane not free from combustible impurities is not to be accepted for carriage.

610 The carriage of this substance, when it contains more than 45% hydrogen cyanide is prohibited.

611 Ammonium nitrate containing more than 0.2% combustible substances (including any organic substance calculated as carbon) is not to be accepted for carriage unless it is a constituent of a substance or article of Class 1.

612 *(Reserved)*

613 Chloric acid solution containing more than 10% chloric acid and mixtures of chloric acid with any liquid other than water is not to be accepted for carriage.

614 2,3,7,8-tetrachlorodibenzo-p-dioxin (TCDD) in concentrations considered highly toxic according to the criteria in 2.2.61.1 is not to be accepted for carriage.

615 *(Reserved)*

616 Substances containing more than 40% liquid nitric esters shall satisfy the exudation test specified in 2.3.1.

617 In addition to the type of explosive, the commercial name of the particular explosive shall be marked on the package and shall be specified in the transport document.

618 In receptacles containing 1,2-butadiene, the oxygen concentration in the gaseous phase shall not exceed 50 ml/m^3.

619-622 *(Reserved)*

623 UN No. 1829 sulphur trioxide shall be inhibited. Sulphur trioxide, 99.95% pure or above, may be carried without inhibitor in tanks provided that its temperature is maintained at or above 32.5 °C. For the carriage of this substance without inhibitor in tanks at a minimum temperature of 32.5 °C, the specification "**Transport under minimum temperature of the product of 32.5 °C**" shall appear in the transport document.

625 Packages containing these articles shall be clearly marked as follows:
"**UN 1950 AEROSOLS**"

626-627 *(Reserved)*

632 Considered to be spontaneously flammable (pyrophoric).

633 Packages and small containers containing this substance shall bear the following marking: "**Keep away from any source of ignition**". This marking shall be in an official language of the forwarding country, and also, if that language is not English, French or German, in English, French or German, unless any agreements concluded between the countries concerned in the transport operation provide otherwise.

634 Packages containing substances carried in refrigerated liquid nitrogen shall, in addition, bear a label conforming to model No. 2.2.

635 Packages containing these articles need not bear a label conforming to model No. 9 unless the article is fully enclosed by packaging, crates or other means that prevent the ready identification of the article.

636 (a) Used lithium cells and batteries collected and presented for carriage for disposal between the consumer collecting point and the intermediate processing facility, together with other non-lithium cells or batteries or alone, are not subject to the other provisions of ADR if they meet the following conditions:

(i) The gross mass of each lithium cell or battery does not exceed 250 g;

(ii) The provisions of packing instruction P903b) (2) are complied with;

(b) Cells contained in equipment shall not be capable of being discharged during carriage to the extent that the open circuit voltage falls below 2 volts or two thirds of the voltage of the undischarged cell, whichever is the lower;

(c) Packages containing used cells or batteries in unmarked packagings shall bear the inscription: "**Used lithium cells**".

637 Genetically modified micro-organisms are those which are not dangerous for humans and animals, but which could alter animals, plants, microbiological substances and ecosystems in such a way as cannot occur naturally. Genetically modified micro-organisms which have received a consent for deliberate release into the environment [1] are not subject to the requirements of Class 9. Live vertebrate or invertebrate animals shall not be used to carry these substances classified under this UN number unless the substance can be carried in no other way. For the carriage of easily perishable substances under this UN number appropriate information shall be given, e.g.: "**Cool at +2 °/+4 °C**" or "**Carry in frozen state**" or "**Do not freeze"**.

638 Substances related to self-reactive substances (see 2.2.41.1.19).

639 See 2.2.2.3, classification code 2F, UN No. 1965, Note 2.

640 The physical and technical characteristics mentioned in column (2) of Table A of Chapter 3.2 determine different tank codes for the carriage of substances of the same packing group in ADR tanks.

In order to identify these physical and technical characteristics of the product carried in the tank, the following shall be added, to the particulars required in the transport document, only in case of carriage in ADR tanks:

"Special provision 640X" where "X" is the applicable capital letter appearing after the reference to special provision 640 in column (6) of Table A of Chapter 3.2.

These particulars may, however, be dispensed with in the case of carriage in the type of tank which, for substances of a specific packing group of a specific UN number, meets at least the most stringent requirements.

642 Except as authorized under 1.1.4.2, this entry of the UN Model Regulations shall not be used for the carriage of fertilizer ammoniating solutions with free ammonia.

643 Stone or aggregate asphalt mixture is not subject to the requirements for Class 9.

644 This substance is admitted for carriage provided that:

- The pH is between 5 and 7 measured in an aqueous solution of 10% of the substance carried;

- The solution does not contain more than 0.2% combustible material or chlorine compounds in quantities such that the chlorine level exceeds 0.02%.

645 The classification code as mentioned in Column (3b) of Table A of Chapter 3.2 shall be used only with the approval of the competent authority of a Contracting Party to ADR prior to carriage.

---

[1] *See in particular Part C of Directive 90/220/EEC (Official Journal of the European Communities, No. L 117 of 8 May 1990, pp. 18-20), which sets out the authorization procedures for the European Community.*

646 Carbon made by steam activation process is not subject to the requirements of ADR.

647 The carriage of vinegar and acetic acid food grade with not more than 25% pure acid by mass is subject only to the following requirements:

(a) Packagings, including IBCs and large packagings, and tanks shall be manufactured from stainless steel or plastic material which is permanently resistant to corrosion of vinegar/acetic acid food grade;

(b) Packagings, including IBCs and large packagings, and tanks shall be subjected to a visual inspection by the owner at least once a year. The results of the inspections shall be recorded and the records kept for at least one year. Damaged packagings, including IBCs and large packagings, and tanks shall not be filled;

(c) Packagings, including IBCs and large packagings, and tanks shall be filled in a way that no product is spilled or adheres to the outer surface;

(d) Seals and closures shall be resistant to vinegar/acetic acid food grade. Packagings, including IBCs and large packagings, and tanks shall be hermetically sealed by the packer or the filler so that under normal conditions of carriage there will be no leakage;

(e) Combination packagings with inner packaging made of glass or plastic (see packing instruction P001 in 4.1.4.1) which fulfil the general packing requirements of 4.1.1.1, 4.1.1.2, 4.1.1.4, 4.1.1.5, 4.1.1.6, 4.1.1.7 and 4.1.1.8 may be used;

The other provisions of ADR do not apply.

648 Articles impregnated with this pesticide, such as fibreboard plates, paper strips, cotton-wool balls, sheets of plastics material, in hermetically closed wrappings, are not subject to the provisions of ADR.

649 To determine the initial boiling point, as mentioned under 2.2.3.1.3 packing group I, the test method according to standard ASTM D86-01[2] is suitable.

Substances which have an initial boiling point above 35 °C determined with this method are substances of packing group II and shall be classified in accordance with the applicable entry of this packing group.

650 Waste consisting of packaging residues, solidified residues and liquid residues of paint may be carried under the conditions of packing group II. In addition to the provisions of UN No. 1263 packing group II, the waste may also be packed and carried as follows:

(a) The waste may be packed in accordance with packing instruction P002 of 4.1.4.1 or to packing instruction IBC06 of 4.1.4.2;

[2] *Standard Test Method for Distillation of Petroleum Products at Atmospheric Pressure, published September 2001 by ASTM International, 100 Barr Harbor Drive, Po Box C700, West Conshohocken, PA 19428-2959, United States*.

(b) The waste may be packed in flexible IBCs of types 13H3, 13H4 and 13H5 in overpacks with complete walls;

(c) Testing of packagings and IBCs indicated under (a) or (b) may be carried out in accordance with the requirements of Chapters 6.1 or 6.5, as appropriate, in relation to solids, at the packing group II performance level.

The tests shall be carried out on packagings and IBCs, filled with a representative sample of the waste, as prepared for carriage;

(d) Carriage in bulk in sheeted vehicles, closed containers or sheeted large containers, all with complete walls is allowed. The body of vehicles or containers shall be leakproof or rendered leakproof, for example by means of a suitable and sufficiently stout inner lining;

(e) If the waste is carried under the conditions of this special provision, the goods shall be declared in accordance with 5.4.1.1.3 in the transport document, as follows: "WASTE, UN 1263 PAINT, 3, II".

651 Special provision V2 (1) is only applicable for a net explosive content of more than 3000 kg (4000 kg with trailer).

CHAPTER 3.4

EXEMPTIONS RELATED TO DANGEROUS GOODS PACKED IN LIMITED QUANTITIES

3.4.1 General requirements

3.4.1.1 Packagings used in accordance with 3.4.3 to 3.4.6 below, need only to conform to the general provisions of 4.1.1.1, 4.1.1.2 and 4.1.1.4 to 4.1.1.8.

3.4.1.2 The maximum gross mass of a combination packaging shall not exceed 30 kg and for shrink and stretched wrapped trays shall not exceed 20 kg.

NOTE: *The limit for combination packagings does not apply when LQ5 is issued.*

3.4.1.3 Subject to the maximum limits in 3.4.1.2 and individual limits in table 3.4.6, dangerous goods may be packed together with other articles or substances, provided they will not react dangerously in the event of leakage.

3.4.2 When the code "LQ0" is shown in Column (7) of Table A in Chapter 3.2 for a given substance or article, that substance or article is not exempted from any of the applicable provisions of Annexes A and B when it is packed in limited quantities, unless otherwise specified in these Annexes.

3.4.3 Unless otherwise provided in this Chapter, when one of the codes "LQ1" or "LQ2" is shown in Column (7) of Table A in Chapter 3.2 for a given substance or article, the provisions of other Chapters of ADR do not apply to the carriage of that substance or article, provided:

(a) The provisions of 3.4.5 (a) to (c) are observed; with respect to these provisions, articles are considered to be inner packagings;

(b) Inner packagings meet the conditions of 6.2.1.2 and 6.2.4.1 to 6.2.4.3.

3.4.4 Unless otherwise provided in this Chapter, when the code "LQ3" is shown in Column (7) of Table A in Chapter 3.2 for a given substance, the provisions of other Chapters of ADR do not apply to the carriage of that substance, provided:

(a) The substance is carried in combination packagings, the following outer packagings being allowed:

- steel or aluminium drums with removable head;
- steel or aluminium jerricans with removable head;
- plywood or fibre drums;
- plastics drums or jerricans with removable head;
- boxes of natural wood, plywood, reconstituted wood, fibreboard, plastics, steel or aluminium;

and be so designed that they meet the relevant construction requirements of 6.1.4;

(b) The maximum net quantities per inner packaging shown in columns (2) or (4) and per package in columns (3) or (5), where indicated, of table 3.4.6 are not exceeded;

(c) Each package is clearly and durably marked with:

(i) the UN number of the goods contained therein, as given in Column (1) of Table A in Chapter 3.2, preceded by the letters "UN";

(ii) in the case of different goods with different UN numbers within a single package:

- the UN numbers of the goods contained therein, preceded by the letters "UN", or
- the letters "LQ" [1].

These markings shall be displayed within a diamond-shaped area surrounded by a line that measures at least 100 mm × 100 mm. The width of line forming the diamond shall be at least 2 mm; the number shall be at least 6 mm high. Where more than one substance assigned to different UN numbers are included in the package, the diamond shall be large enough to include each relevant UN number. If the size of the package so requires, the dimension may be reduced, provided the markings remain clearly visible.

3.4.5 Unless otherwise provided in this Chapter, when one of the codes "LQ4" to "LQ19" and "LQ22" to "LQ28" is shown in Column (7) of Table A in Chapter 3.2 for a given substance, the provisions of other Chapters of ADR do not apply to the carriage of that substance, provided:

(a) The substance is carried:

- in combination packagings, corresponding to the prescriptions of 3.4.4 (a), or
- in metal or plastics inner packagings which are not liable to break or be easily punctured, placed in shrink-wrapped or stretch-wrapped trays;

(b) The maximum net quantities per inner packaging shown in columns (2) or (4) and per package in columns (3) or (5), where indicated, of table 3.4.6 are not exceeded;

(c) Each package is clearly and durably marked as indicated in 3.4.4 (c).

[1] *The letters "LQ" are an abbreviation of the English words "Limited Quantities". The letters "LQ" are not permitted by the IMDG Code or the ICAO Technical Instructions.*

3.4.6 Table

Code	Combination packagings[a] Maximum net quantity		Inner packagings placed in shrink-wrapped or stretch-wrapped trays[a] Maximum net quantity	
	per inner packaging	per package[b]	per inner packaging	per package[b]
(1)	(2)	(3)	(4)	(5)
LQ0	No exemption under the conditions of 3.4.2.			
LQ1	120 ml		120 ml	
LQ2	1 *l*		1 *l*	
LQ3 [c]	500 ml	1 *l*	Not allowed	Not allowed
LQ4	3 *l*		1 *l*	
LQ5	5 *l*	Unlimited	1 *l*	
LQ6 [c]	5 *l*		1 *l*	
LQ7 [c]	5 *l*		5 *l*	
LQ8	3 kg		500 g	
LQ9	6 kg		3 kg	
LQ10	500 ml		500 ml	
LQ11	500 g		500 g	
LQ12	1 kg		1 kg	
LQ13	1 *l*		1 *l*	
LQ14	25 ml		25 ml	
LQ15	100 g		100 g	
LQ16	125 ml		125 ml	
LQ17	500 ml	2 *l*	100 ml	2 *l*
LQ18	1 kg	4kg	500 g	4 kg
LQ19	3 *l*		1 *l*	
LQ20	Reserved	Reserved	Reserved	Reserved
LQ21	Reserved	Reserved	Reserved	Reserved
LQ22	1 *l*		500 ml	
LQ23	3 kg		1 kg	
LQ24	6 kg		2 kg	
LQ25[d]	1 kg		1 kg	
LQ26[d]	500 ml	2l	500 ml	2 *l*
LQ27	6 kg		6 kg	
LQ28	3 *l*		3 *l*	

[a] *See 3.4.1.2.*

[b] *See 3.4.1.3.*

[c] *In the case of homogenous mixtures of Class 3 containing water, the quantities specified relate only to the substance of Class 3 contained in those mixtures.*

[d] *For UN Nos. 2315, 3151, 3152 and 3432 when carried in apparatus, the inner packaging quantities shall not be exceeded per piece of apparatus. The apparatus shall be carried in a leakproof packaging and the complete package shall conform to 3.4.4 (c). Shrink-wrapped and stretch-wrapped trays shall not be used for apparatus.*

3.4.7 Overpacks containing packages conforming to 3.4.3, 3.4.4 or 3.4.5 shall be marked, as required by 3.4.4 (c) for each item of dangerous goods contained in the overpack, unless markings representative of all dangerous goods contained in the overpack are visible.

PART 4

Packing and tank provisions

CHAPTER 4.1

USE OF PACKAGINGS, INCLUDING INTERMEDIATE BULK CONTAINERS (IBCs) AND LARGE PACKAGINGS

4.1.1 General provisions for the packing of dangerous goods in packagings, including IBCs and large packagings

***NOTE**: The general provisions of this section only apply to the packing of goods of Classes 2, 6.2 and 7 as indicated in 4.1.1.16 (Class 2), 4.1.8.2 (Class 6.2), 4.1.9.1.5 (Class 7) and in the applicable packing instructions of 4.1.4 (packing instructions P201 and P202 for Class 2 and P621, IBC620 and LP621 for Class 6.2).*

4.1.1.1 Dangerous goods shall be packed in good quality packagings, including IBCs and large packagings, which shall be strong enough to withstand the shocks and loadings normally encountered during carriage, including trans-shipment between transport units and between transport units and warehouses as well as any removal from a pallet or overpack for subsequent manual or mechanical handling. Packagings, including IBCs and large packagings, shall be constructed and closed so as to prevent any loss of contents when prepared for transport which might be caused under normal conditions of transport, by vibration, or by changes in temperature, humidity or pressure (resulting from altitude, for example). Packagings, including IBCs and large packagings, shall be closed in accordance with the information provided by the manufacturer. No dangerous residue shall adhere to the outside of packagings, IBCs and large packagings during carriage. These provisions apply, as appropriate, to new, reused, reconditioned or remanufactured packagings and to new, reused, repaired or remanufactured IBCs, and to new or reused large packagings.

4.1.1.2 Parts of packagings, including IBCs and large packagings, which are in direct contact with dangerous goods:

(a) shall not be affected or significantly weakened by those dangerous goods; and

(b) shall not cause a dangerous effect e.g. catalysing a reaction or reacting with the dangerous goods.

Where necessary, they shall be provided with a suitable inner coating or treatment.

***NOTE:** For chemical compatibility of plastics packagings, including IBCs, made from high and medium molecular mass polyethylene see 4.1.1.19.*

4.1.1.3 Unless provided elsewhere in ADR, each packaging, including IBCs and large packagings, except inner packagings, shall conform to a design type successfully tested in accordance with the requirements of 6.1.5, 6.3.2, 6.5.4 or 6.6.5, as applicable. The packagings for which the test is not required are mentioned under 6.1.1.3.

4.1.1.4 When filling packagings, including IBCs and large packagings, with liquids, sufficient ullage (outage) shall be left to ensure that neither leakage nor permanent distortion of the packaging occurs as a result of an expansion of the liquid caused by temperatures likely to occur during transport. Unless specific requirements are prescribed, liquids shall not completely fill a packaging at a temperature of 55 °C. However, sufficient ullage shall be left in an IBC to ensure that at the mean bulk temperature of 50 °C it is not filled to more than 98% of its water capacity. For a filling temperature of 15 °C, the maximum degree of filling shall be determined as follows, unless otherwise provided, either:

(a)

Boiling point (initial boiling point) of the substance in °C	< 60	≥ 60 < 100	≥ 100 < 200	≥ 200 < 300	≥ 300
Degree of filling as a percentage of the capacity of the packaging	90	92	94	96	98

or

(b) $$\text{degree of filling} = \frac{98}{1 + \alpha\,(50 - t_f)}\ \%\ \text{of the capacity of the packaging.}$$

In this formula α represents the mean coefficient of cubic expansion of the liquid substance between 15 °C and 50 °C; that is to say, for a maximum rise in temperature of 35 °C,

$$\alpha \text{ is calculated according to the formula}: \alpha = \frac{d_{15} - d_{50}}{35 \times d_{50}}$$

d_{15} and d_{50} being the relative densities [1] of the liquid at 15 °C and 50 °C and t_f the mean temperature of the liquid at the time of filling.

4.1.1.5 Inner packagings shall be packed in an outer packaging in such a way that, under normal conditions of carriage, they cannot break, be punctured or leak their contents into the outer packaging. Inner packagings that are liable to break or be punctured easily, such as those made of glass, porcelain or stoneware or of certain plastics materials, etc., shall be secured in outer packagings with suitable cushioning material. Any leakage of the contents shall not substantially impair the protective properties of the cushioning material or of the outer packaging.

4.1.1.6 Dangerous goods shall not be packed together in the same outer packaging or in large packagings, with dangerous or other goods if they react dangerously with each other and cause:

(a) combustion or evolution of considerable heat;

(b) evolution of flammable, asphyxiant, oxidizing or toxic gases;

(c) the formation of corrosive substances; or

(d) the formation of unstable substances.

NOTE: *For mixed packing special provisions, see 4.1.10.*

4.1.1.7 The closures of packagings containing wetted or diluted substances shall be such that the percentage of liquid (water, solvent or phlegmatizer) does not fall below the prescribed limits during transport.

4.1.1.7.1 Where two or more closure systems are fitted in series on an IBC, that nearest to the substance being carried shall be closed first.

[1] *Relative density (d) is considered to be synonymous with specific gravity (SG) and will be used throughout this Chapter.*

4.1.1.8 Liquids may only be filled into inner packagings which have an appropriate resistance to internal pressure that may be developed under normal conditions of carriage. Where pressure may develop in a package by the emission of gas from the contents (as a result of temperature increase or other causes), the packaging, including IBC, may be fitted with a vent. A venting device shall be fitted if dangerous overpressure may develop due to normal decomposition of substances. However, the gas emitted shall not cause danger on account of its toxicity, its flammability, the quantity released, etc. The vent shall be so designed that, when the packaging, including IBC, is in the attitude in which it is intended to be carried, leakages of liquid and the penetration of foreign matter are prevented under normal conditions of carriage.

NOTE: *Venting of the package is not permitted for air transport.*

4.1.1.9 New, remanufactured or reused packagings, including IBCs and large packagings, or reconditioned packagings and repaired or routinely maintained IBCs shall be capable of passing the tests prescribed in 6.1.5, 6.3.2, 6.5.4 or 6.6.5, as applicable. Before being filled and handed over for carriage, every packaging, including IBCs and large packagings, shall be inspected to ensure that it is free from corrosion, contamination or other damage and every IBC shall be inspected with regard to the proper functioning of any service equipment. Any packaging which shows signs of reduced strength as compared with the approved design type shall no longer be used or shall be so reconditioned, that it is able to withstand the design type tests. Any IBC which shows signs of reduced strength as compared with the tested design type shall no longer be used or shall be so repaired or routinely maintained that it is able to withstand the design type tests.

4.1.1.10 Liquids shall be filled only into packagings, including IBCs, which have an appropriate resistance to the internal pressure that may develop under normal conditions of carriage. Packagings and IBCs marked with the hydraulic test pressure prescribed in 6.1.3.1 (d) and 6.5.2.2.1, respectively shall be filled only with a liquid having a vapour pressure:

(a) such that the total gauge pressure in the packaging or IBC (i.e. the vapour pressure of the filling substance plus the partial pressure of air or other inert gases, less 100 kPa) at 55 °C, determined on the basis of a maximum degree of filling in accordance with 4.1.1.4 and a filling temperature of 15 °C, will not exceed two-thirds of the marked test pressure; or

(b) at 50 °C less than four-sevenths of the sum of the marked test pressure plus 100 kPa; or

(c) at 55 °C less than two-thirds of the sum of the marked test pressure plus 100 kPa.

Metal IBCs intended for the carriage of liquids shall not be used to carry liquids having a vapour pressure of more than 110kPa (1.1 bar) at 50 °C or 130kPa (1.3 bar) at 55 °C.

EXAMPLES OF REQUIRED MARKED TEST PRESSURES FOR PACKAGINGS, INCLUDING IBCs, CALCULATED AS IN 4.1.1.10 (c)

UN No	Name	Class	Packing group	V_{p55} (kPa)	$V_{p55} \times 1.5$ (kPa)	$(V_{p55} \times 1.5)$ minus 100 (kPa)	Required minimum test pressure gauge under 6.1.5.5.4(c) (kPa)	Minimum test pressure (gauge) to be marked on the packaging (kPa)
2056	Tetrahydrofuran	3	II	70	105	5	100	100
2247	n-Decane	3	III	1.4	2.1	-97.9	100	100
1593	Dichloromethane	6.1	III	164	246	146	146	150
1155	Diethyl ether	3	I	199	299	199	199	250

***NOTE 1**: For pure liquids the vapour pressure at 55 °C (V_{p55}) can often be obtained from scientific tables.*

***NOTE 2**: The table refers to the use of 4.1.1.10 (c) only, which means that the marked test pressure shall exceed 1.5 times the vapour pressure at 55 °C less 100 kPa. When, for example, the test pressure for n-decane is determined according to 6.1.5.5.4 (a), the minimum marked test pressure may be lower.*

***NOTE 3**: For diethyl ether the required minimum test pressure under 6.1.5.5.5 is 250 kPa.*

4.1.1.11 Empty packagings, including IBCs and large packagings, that have contained a dangerous substance are subject to the same requirements as those for a filled packaging, unless adequate measures have been taken to nullify any hazard.

4.1.1.12 Every packagings, including IBCs, intended to contain liquids shall successfully undergo a suitable leakproofness test, and be capable of meeting the appropriate test level indicated in 6.1.5.4.3 or 6.5.4.7 for the various types of IBCs:

(a) before it is first used for carriage;

(b) after remanufacturing or reconditioning of any packaging, before it is re-used for carriage;

(c) after the repair or remanufacture of any IBC, before it is reused for carriage.

For this test the packaging, or IBC, need not have its closures fitted. The inner receptacle of a composite packaging or IBC may be tested without the outer packaging, provided the test results are not affected. This test is not required for:

- inner packagings of combination packagings or large packagings;
- inner receptacles of composite packagings (glass, porcelain or stoneware) marked with the symbol "RID/ADR" in accordance with 6.1.3.1 (a) (ii);
- light gauge metal packagings marked with the symbol "RID/ADR" in accordance with 6.1.3.1 (a) (ii).

4.1.1.13 Packagings, including IBCs, used for solids which may become liquid at temperatures likely to be encountered during carriage shall also be capable of containing the substance in the liquid state.

4.1.1.14 Packagings, including IBCs, used for powdery or granular substances shall be sift-proof or shall be provided with a liner.

4.1.1.15 For plastics drums and jerricans, rigid plastics IBCs and composite IBCs with plastics inner receptacles, unless otherwise approved by the competent authority, the period of use permitted for the carriage of dangerous substances shall be five years from the date of manufacture of the receptacles, except where a shorter period of use is prescribed because of the nature of the substance to be carried.

4.1.1.16 Packagings, including IBCs and large packagings, marked in accordance with 6.1.3, 6.2.5.8, 6.2.5.9, 6.3.1, 6.5.2 or 6.6.3 but which were approved in a State which is not a Contracting Party to ADR may nevertheless be used for carriage under ADR.

4.1.1.17 ***Explosives, self-reactive substances and organic peroxides***

Unless specific provision to the contrary is made in ADR, the packagings, including IBCs and large packagings, used for goods of Class 1, self-reactive substances of Class 4.1 and organic peroxides of Class 5.2 shall comply with the provisions for the medium danger group (packing group II).

4.1.1.18 ***Use of salvage packagings***

4.1.1.18.1 Damaged, defective, leaking or non-conforming packages, or dangerous goods that have spilled or leaked may be carried in salvage packagings mentioned in 6.1.5.1.11. This does not prevent the use of a bigger size packaging of appropriate type and performance level under the conditions of 4.1.1.18.2.

4.1.1.18.2 Appropriate measures shall be taken to prevent excessive movement of the damaged or leaking packages within a salvage packaging. When the salvage packaging contains liquids, sufficient inert absorbent material shall be added to eliminate the presence of free liquid.

4.1.1.19 ***Verification of the chemical compatibility of plastics packagings, including IBCs, by assimilation of filling substances to standard liquids***

4.1.1.19.1 *Scope*

For high and medium molecular mass polyethylene packagings as specified in 6.1.5.2.6, and for high molecular mass polyethylene IBCs as specified in 6.5.4.3.5, the chemical compatibility with filling substances may be verified by assimilation to standard liquids following the procedures, as set out in 4.1.1.19.3 to 4.1.1.19.5 and using the list in table 4.1.1.19.6, provided that the particular design types have been tested with these standard liquids in accordance with 6.1.5 or 6.5.4, taking into account 6.1.6 and that the conditions in 4.1.1.19.2 are met. When assimilation in accordance with this sub-section is not possible, the chemical compatibility needs to be verified by design type testing in accordance with 6.1.5.2.5 or by laboratory tests in accordance with 6.1.5.2.7 for packagings, and in accordance with 6.5.4.3.3 or 6.5.4.3.6 for IBCs, respectively.

NOTE: *Irrespective of the provisions of this sub-section, the use of packagings, including IBCs, for a specific filling substance is subject to the limitations of Table A of Chapter 3.2, and the packing instructions in Chapter 4.1.*

4.1.1.19.2 *Conditions*

The relative densities of the filling substances shall not exceed that used to determine the height for the drop test performed successfully according to 6.1.5.3.4 or 6.5.4.1.3 and the mass for the stacking test performed successfully according to 6.1.5.6 or where necessary according to 6.5.4.6 with the assimilated standard liquid(s). The vapour pressures of the filling substances at 50 °C or 55 °C shall not exceed that used to determine the pressure for the internal pressure (hydraulic) test performed successfully according to 6.1.5.5.4 or 6.5.4.8.4.2 with the assimilated standard liquid(s). In case that filling substances are assimilated to a combination of standard liquids, the corresponding values of the filling substances shall not exceed the minimum values derived from the applied drop heights, stacking masses and internal test pressures.

Example: UN 1736 Benzoyl chloride is assimilated to the combination of standard liquids "Mixture of hydrocarbons and wetting solution". It has a vapour pressure of 0.34 kPa at 50 °C and a relative density of approximately 1.2. Design type tests for plastics drums and jerricans were frequently performed at minimum required test levels. In practice this means that the stacking test is commonly performed with stacking loads considering only a relative

density of 1.0 for the "Mixture of hydrocarbons" and a relative density of 1.2 for the "Wetting solution" (see definition of standard liquids in 6.1.6). As a consequence chemical compatibility of such tested design types would not be verified for benzoyl chloride by reason of the inadequate test level of the design type with the standard liquid "mixture of hydrocarbons". (Due to the fact that in the majority of cases the applied internal hydraulic test pressure is not less than 100 kPa, the vapour pressure of benzoyl chloride would be covered by such test level according to 4.1.1.10).

All components of a filling substance, which may be a solution, mixture or preparation, such as wetting agents in detergents and disinfectants, irrespective whether dangerous or non-dangerous, shall be included in the assimilation procedure.

4.1.1.19.3 *Assimilation procedure*

The following steps shall be taken to assign filling substances to listed substances or groups of substances in table 4.1.1.19.6 (see also scheme in Figure 4.1.1.19.1):

(a) Classify the filling substance in accordance with the procedures and criteria of Part 2 (determination of the UN number and packing group);

(b) If it is included there, go to the UN number in column (1) of table 4.1.1.19.6;

(c) Select the line that corresponds in terms of packing group, concentration, flashpoint, the presence of non-dangerous components etc. by means of the information given in columns (2a), (2b) and (4), if there is more than one entry for this UN number.

If this is not possible, the chemical compatibility shall be verified in accordance with 6.1.5.2.5 or 6.1.5.2.7 for packagings, and in accordance with 6.5.4.3.3 or 6.5.4.3.6 for IBCs (however, in the case of aqueous solutions, see 4.1.1.19.4);

(d) If the UN number and packing group of the filling substance determined in accordance with (a) is not included in the assimilation list, the chemical compatibility shall be proved in accordance with 6.1.5.2.5 or 6.1.5.2.7 for packagings, and in accordance with 6.5.4.3.3 or 6.5.4.3.6 for IBCs;

(e) Apply the "Rule for collective entries", as described in 4.1.1.19.5, if this is indicated in column (5) of the selected line;

(f) The chemical compatibility of the filling substance may be regarded as verified taking into account 4.1.1.19.1 and 4.1.1.19.2, if a standard liquid or a combination of standard liquids is assimilated in column (5) and the design type is approved for that/those standard liquid(s).

Figure 4.1.1.19.1*:* Scheme for the assimilation of filling substances to standard liquids

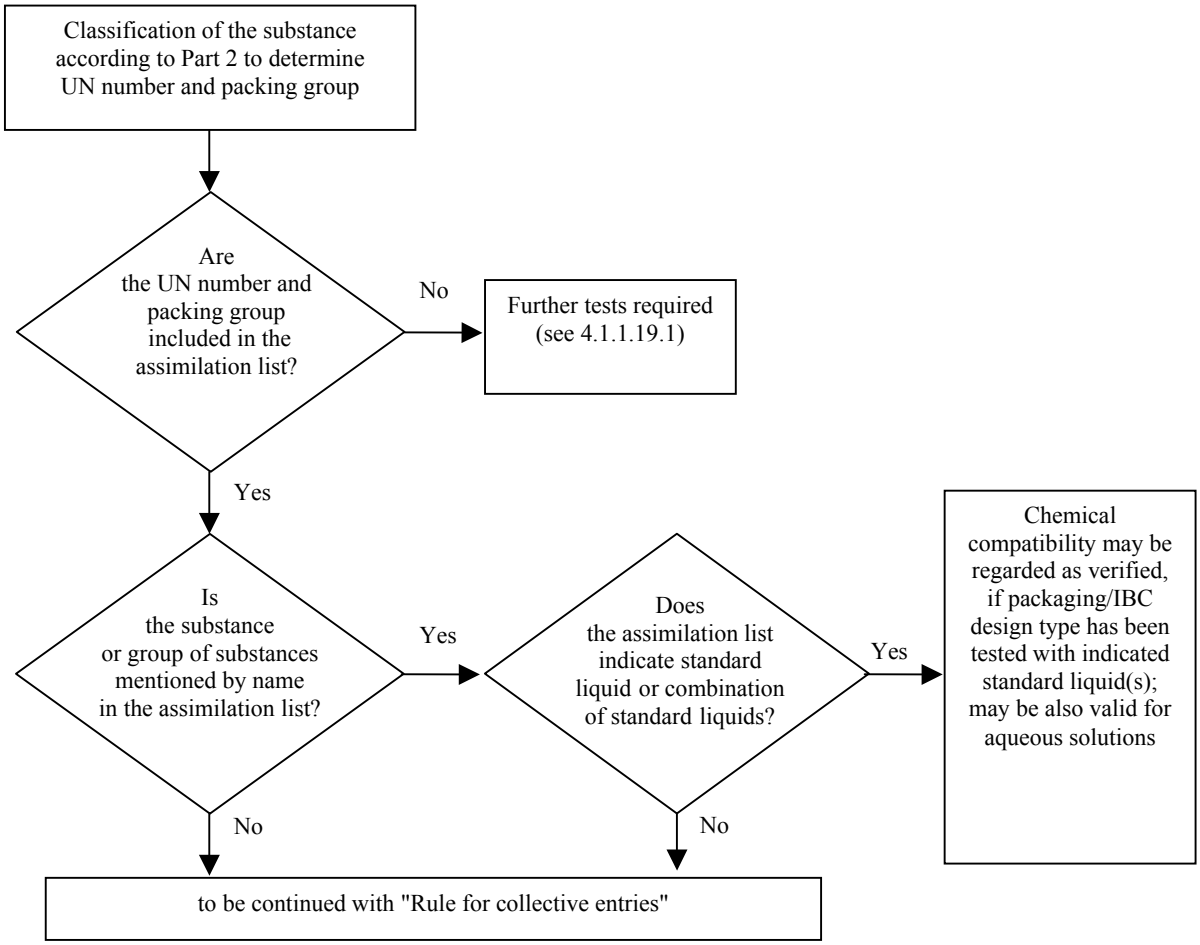

4.1.1.19.4 *Aqueous solutions*

Aqueous solutions of substances and groups of substances assimilated to specific standard liquid(s) in accordance with 4.1.1.19.3 may also be assimilated to that (those) standard liquid(s) provided the following conditions are met:

(a) the aqueous solution can be assigned to the same UN number as the listed substance in accordance with the criteria of 2.1.3.3, and

(b) the aqueous solution is not specifically mentioned by name otherwise in the assimilation list in 4.1.1.19.6, and

(c) no chemical reaction is taking place between the dangerous substance and the solvent water.

Example: Aqueous solutions of UN 1120 tert-Butanol:

- *Pure tert-Butanol itself is assigned to the standard liquid "acetic acid" in the assimilation list.*

- *Aqueous solutions of tert-Butanol can be classified under the entry UN 1120 BUTANOLS in accordance with 2.1.3.3, because the aqueous solution of tert-Butanol does not differ from the entries of the pure substances relating to the class, the packing group(s) and the physical state. Furthermore, the entry "1120 BUTANOLS" is not explicitly limited to the pure substances, and aqueous solutions of these substances are not specifically mentioned by name otherwise in Table A of chapter 3.2 as well as in the assimilation list.*

- *UN 1120 BUTANOLS do not react with water under normal conditions of carriage.*

As a consequence, aqueous solutions of UN 1120 tert-Butanol may be assigned to the standard liquid "acetic acid".

4.1.1.19.5 *Rule for collective entries*

For the assimilation of filling substances for which "Rule for collective entries" is indicated in column (5), the following steps shall be taken and conditions be met (see also scheme in Figure 4.1.1.19.2):

(a) Perform the assimilation procedure for each dangerous component of the solution, mixture or preparation in accordance with 4.1.1.19.3 taking into account the conditions in 4.1.1.19.2. In the case of generic entries, components may be neglected, that are known to have no damaging effect on high density polyethylene (e.g. solid pigments in UN 1263 PAINT or PAINT RELATED MATERIAL);

(b) A solution, mixture or preparation cannot be assimilated to a standard liquid, if:

(i) the UN number and packing group of one or more of the dangerous components does not appear in the assimilation list; or

(ii) "Rule for collective entries" is indicated in column (5) of the assimilation list for one or more of the components; or

(iii) (with the exception of UN 2059 NITROCELLULOSE SOLUTION, FLAMMABLE) the classification code of one or more of its dangerous components differs from that of the solution, mixture or preparation.

(c) If all dangerous components are listed in the assimilation list, and its classification codes are in accordance with the classification code of the solution, mixture or preparation itself, and all dangerous components are assimilated to the same standard liquid or combination of standard liquids in column (5), the chemical compatibility of the solution, mixture or preparation may be regarded as verified taking into account 4.1.1.19.1 and 4.1.1.19.2;

(d) If all dangerous components are listed in the assimilation list and its classification codes are in accordance with the classification code of the solution, mixture or preparation itself, but different standard liquids are indicated in column (5), the chemical compatibility may only be regarded as verified for the following combinations of standard liquids taking into account 4.1.1.19.1 and 4.1.1.19.2:

(i) water/nitric acid 55%; with the exception of inorganic acids with the classification code C1, which are assigned to standard liquid "water";

(ii) water/wetting solution;

(iii) water/acetic acid;

(iv) water/mixture of hydrocarbons;

(v) water/n-butyl acetate – n-butyl acetate-saturated wetting solution;

(e) In the scope of this rule, chemical compatibility is not regarded as verified for other combinations of standard liquids than those specified in (d) and for all cases specified in (b). In such cases the chemical compatibility shall be verified by other means (see 4.1.1.19.3 (d)).

Example 1: Mixture of UN 1940 THIOGLYCOLIC ACID (50%) and UN 2531 METHACRYLIC ACID, STABILIZED (50%); classification of the mixture: UN 3265 CORROSIVE LIQUID, ACIDIC, ORGANIC, N.O.S.

- *Both the UN numbers of the components and the UN number of the mixture are included in the assimilation list;*

- *Both the components and the mixture have the same classification code: C3;*

- *UN 1940 THIOGLYCOLIC ACID is assimilated to standard liquid "acetic acid", and UN 2531 METHACRYLIC ACID, STABILIZED is assimilated to standard liquid "n-butyl acetate/n-butyl acetate-saturated wetting solution". According to paragraph (d) this is not an acceptable combination of standard liquids. The chemical compatibility of the mixture has to be verified by other means.*

Example 2: Mixture of UN 1793 ISOPROPYL ACID PHOSPHATE (50%) and UN 1803 PHENOLSULPHONIC ACID, LIQUID (50%); classification of the mixture: UN 3265 CORROSIVE LIQUID, ACIDIC, ORGANIC, N.O.S.

- *Both the UN numbers of the components and the UN number of the mixture are included in the assimilation list;*

- *Both the components and the mixture have the same classification code: C3;*

- *UN 1793 ISOPROPYL ACID PHOSPHATE is assimilated to standard liquid "wetting solution", and UN 1803 PHENOLSULPHONIC ACID, LIQUID is assimilated to standard liquid "water". According to paragraph (d) this is one of the acceptable combinations of standard liquids. As a consequence the chemical compatibility may be regarded as verified for this mixture, provided the packaging design type is approved for the standard liquids "wetting solution" and "water".*

Figure 4.1.1.19.2: Scheme "Rules for collective entries"

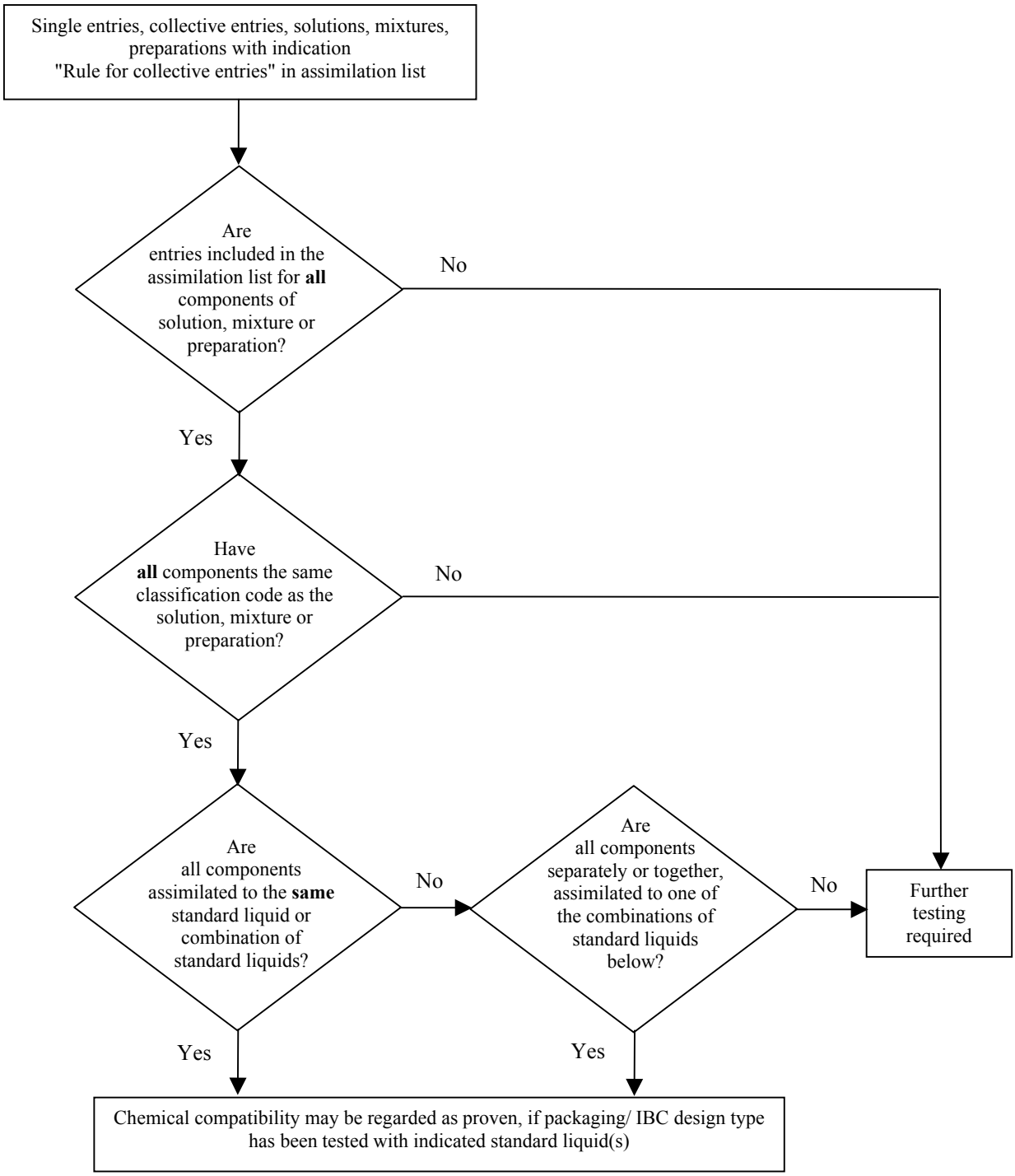

Acceptable combinations of standard liquids:

- water/nitric acid (55%), with the exception of inorganic acids of classification code C1 which are assigned to standard liquid "water";
- water/wetting solution;
- water/acetic acid;
- water/mixture of hydrocarbons;
- water/n-butyl acetate – n-butyl acetate saturated wetting solution

4.1.1.19.6 *Assimilation list*

In the following table (assimilation list) dangerous substances are listed in the numerical order of their UN numbers. As a rule, each line deals with a dangerous substance, single entry or collective entry covered by a specific UN number. However, several consecutive lines may be used for the same UN number, if substances belonging to the same UN number have different names (e.g. individual isomers of a group of substances), different chemical properties, different physical properties and/or different transport conditions. In such cases the single entry or collective entry within the particular packing group is the last one of such consecutive lines.

Columns (1) to (4) of table 4.1.1.19.6, following a structure similar to that of Table A of Chapter 3.2, are used to identify the substance for the purpose of this sub-section. The last column indicates the standard liquid(s) to which the substance can be assimilated.

Explanatory notes for each column:

Column (1) UN No.

Contains the UN number:

- of the dangerous substance, if the substance has been assigned its own specific UN number, or

- of the collective entry to which dangerous substances not listed by name have been assigned in accordance with the criteria ("decision trees") of Part 2.

Column (2a) Proper shipping name or technical name

Contains the name of the substance, the name of the single entry, which may cover various isomers, or the name of the collective entry itself.

The indicated name can deviate from the applicable proper shipping name.

Column (2b) Description

Contains a descriptive text to clarify the scope of the entry in those cases when the classification, the transport conditions and/or the chemical compatibility of the substance may be variable.

Column (3a) Class

Contains the number of the Class, whose heading covers the dangerous substance. This Class number is assigned in accordance with the procedures and criteria of Part 2.

Column (3b) Classification code

Contains the classification code of the dangerous substance in accordance with the procedures and criteria of Part 2.

Column (4) Packing group

Contains the packing group number(s) (I, II or III) assigned to the dangerous substance in accordance with the procedures and criteria of Part 2. Certain substances are not assigned to packing groups.

Column (5) Standard liquid

This column indicates, as definite information, either a standard liquid or a combination of standard liquids to which the substance can be assimilated, or a reference to the rule for collective entries in 4.1.1.19.5.

Table 4.1.1.19.6: Assimilation list

UN No.	Proper shipping name or technical name	Description	Class	Classification Code	Packing group	Standard liquid
	3.1.2	3.1.2	2.2	2.2	2.1.1.3	
(1)	(2a)	(2b)	(3a)	(3b)	(4)	(5)
1090	**Acetone**		3	F1	II	Mixture of hydrocarbons **Remark:** applicable only, if it is proved that the permeability of the substance out of the package intended for carriage has an acceptable level
1093	**Acrylonitrile, stabilized**		3	FT1	I	n-Butyl acetate/ n-butyl acetate-saturated wetting solution
1104	**Amyl acetates**	pure isomers and isomeric mixture	3	F1	III	n-Butyl acetate/ n-butyl acetate-saturated wetting solution
1105	**Pentanols**	pure isomers and isomeric mixture	3	F1	II/III	n-Butyl acetate/ n-butyl acetate-saturated wetting solution
1106	**Amylamine**s	pure isomers and isomeric mixture	3	FC	II/III	Mixture of hydrocarbons **and** wetting solution
1109	**Amyl formates**	pure isomers and isomeric mixture	3	F1	III	n-Butyl acetate/ n-butyl acetate-saturated wetting solution
1120	**Butanols**	pure isomers and isomeric mixture	3	F1	II/III	Acetic acid
1123	**Butyl acetates**	pure isomers and isomeric mixture	3	F1	II/III	n-Butyl acetate/ n-butyl acetate-saturated wetting solution
1125	**n-Butylamine**		3	FC	II	Mixture of hydrocarbons **and** wetting solution
1128	**n-Butyl formate**		3	F1	II	n-Butyl acetate/ n-butyl acetate-saturated wetting solution
1129	**Butyraldehyde**		3	F1	II	Mixture of hydrocarbons
1133	**Adhesives**	containing flammable liquid	3	F1	I/II/III	Rule for collective entries
1139	**Coating solution**	includes surface treatments or coatings used for industrial or other purposes such as vehicle under coating, drum or barrel lining	3	F1	I/II/III	Rule for collective entries

UN No.	Proper shipping name or technical name	Description	Class	Classification Code	Packing group	Standard liquid
	3.1.2	3.1.2	2.2	2.2	2.1.1.3	
(1)	(2a)	(2b)	(3a)	(3b)	(4)	(5)
1145	**Cyclohexane**		3	F1	II	Mixture of hydrocarbons
1146	**Cyclopentane**		3	F1	II	Mixture of hydrocarbons
1153	**Ethylene glycol diethyl ether**		3	F1	III	n-Butyl acetate/ n-butyl acetate-saturated wetting solution **and** mixture of hydrocarbons
1154	**Diethylamine**		3	FC	II	Mixture of hydrocarbons **and** wetting solution
1158	**Diisopropylamine**		3	FC	II	Mixture of hydrocarbons **and** wetting solution
1160	**Dimethylamine aqueous solution**		3	FC	II	Mixture of hydrocarbons **and** wetting solution
1165	**Dioxane**		3	F1	II	Mixture of hydrocarbons
1169	**Extracts, aromatic, liquid**		3	F1	I/II/III	Rule for collective entries
1170	**Ethanol** or **Ethanol solution**	aqueous solution	3	F1	II/III	Acetic acid
1171	**Ethylene glycol monoethyl ether**		3	F1	III	n-Butyl acetate/ n-butyl acetate-saturated wetting solution **and** mixture of hydrocarbons
1172	**Ethylene glycol monoethyl ether acetate**		3	F1	III	n-Butyl acetate/ n-butyl acetate-saturated wetting solution **and** mixture of hydrocarbons
1173	**Ethyl acetate**		3	F1	II	n-Butyl acetate/ n-butyl acetate-saturated wetting solution
1177	**2-Ethylbutyl acetate**		3	F1	III	n-Butyl acetate/ n-butyl acetate-saturated wetting solution
1178	**2-Ethylbutyraldehyde**		3	F1	II	Mixture of hydrocarbons
1180	**Ethyl butyrate**		3	F1	III	n-Butyl acetate/ n-butyl acetate-saturated wetting solution
1188	**Ethylene glycol monomethyl ether**		3	F1	III	n-Butyl acetate/ n-butyl acetate-saturated wetting solution **and** mixture of hydrocarbons
1189	**Ethylene glycol monomethyl ether acetate**		3	F1	III	n-Butyl acetate/ n-butyl acetate-saturated wetting solution **and** mixture of hydrocarbons
1190	**Ethyl formate**		3	F1	II	n-Butyl acetate/ n-butyl acetate-saturated wetting solution
1191	**Octyl aldehydes**	pure isomers and isomeric mixture	3	F1	III	Mixture of hydrocarbons

UN No.	Proper shipping name or technical name	Description	Class	Classification Code	Packing group	Standard liquid
	3.1.2	3.1.2	2.2	2.2	2.1.1.3	
(1)	(2a)	(2b)	(3a)	(3b)	(4)	(5)
1192	**Ethyl lactate**		3	F1	III	n-Butyl acetate/ n-butyl acetate-saturated wetting solution
1195	**Ethyl propionate**		3	F1	II	n-Butyl acetate/ n-butyl acetate-saturated wetting solution
1197	**Extracts, flavouring, liquid**		3	F1	I/II/III	Rule for collective entries
1198	**Formaldehyde solution, flammable**	aqueous solution, flashpoint between 23 °C and 61 °C	3	FC	III	Acetic acid
1202	**Diesel fuel**	complying with EN 590:1993 or with a flashpoint not more than 100 °C	3	F1	III	Mixture of hydrocarbons
1202	**Gas oil**	flashpoint not more than 100 °C	3	F1	III	Mixture of hydrocarbons
1202	**Heating oil, light**	extra light	3	F1	III	Mixture of hydrocarbons
1202	**Heating oil, light**	complying with EN 590:1993 or with a flashpoint not more than 100 °C	3	F1	III	Mixture of hydrocarbons
1203	**Motor spirit,** or **gasoline,** or **petrol**		3	F1	II	Mixture of hydrocarbons
1206	**Heptanes**	pure isomers and isomeric mixture	3	F1	II	Mixture of hydrocarbons
1207	**Hexaldehyde**	n-Hexaldehyde	3	F1	III	Mixture of hydrocarbons
1208	**Hexanes**	pure isomers and isomeric mixture	3	F1	II	Mixture of hydrocarbons
1210	**Printing ink** or **Printing ink related material**	flammable, including printing ink thinning or reducing compound	3	F1	I/II/III	Rule for collective entries
1212	**Isobutanol**		3	F1	III	Acetic acid
1213	**Isobutyl acetate**		3	F1	II	n-Butyl acetate/ n-butyl acetate-saturated wetting solution
1214	**Isobutylamine**		3	FC	II	Mixture of hydrocarbons **and** wetting solution
1216	**Isooctenes**	pure isomers and isomeric mixture	3	F1	II	Mixture of hydrocarbons
1219	**Isopropanol**		3	F1	II	Acetic acid
1220	**Isopropyl acetate**		3	F1	II	n-Butyl acetate/ n-butyl acetate-saturated wetting solution
1221	**Isopropylamine**		3	FC	I	Mixture of hydrocarbons **and** wetting solution
1223	**Kerosene**		3	F1	III	Mixture of hydrocarbons
1224	3,3-Dimethyl-2-butanone		3	F1	II	Mixture of hydrocarbons
1224	**Ketones, liquid, n.o.s.**		3	F1	II/III	Rule for collective entries
1230	**Methanol**		3	FT1	II	Acetic acid

UN No.	Proper shipping name or technical name	Description	Class	Classification Code	Packing group	Standard liquid
	3.1.2	3.1.2	2.2	2.2	2.1.1.3	
(1)	(2a)	(2b)	(3a)	(3b)	(4)	(5)
1231	**Methyl acetate**		3	F1	II	n-Butyl acetate/ n-butyl acetate-saturated wetting solution
1233	**Methylamyl acetate**		3	F1	III	n-Butyl acetate/ n-butyl acetate-saturated wetting solution
1235	**Methylamine, aqueous solution**		3	FC	II	Mixture of hydrocarbons **and** wetting solution
1237	**Methyl butyrate**		3	F1	II	n-Butyl acetate/ n-butyl acetate-saturated wetting solution
1247	**Methyl methacrylate monomer, stabilized**		3	F1	II	n-Butyl acetate/ n-butyl acetate-saturated wetting solution
1248	**Methyl propionate**		3	F1	II	n-Butyl acetate/ n-butyl acetate-saturated wetting solution
1262	**Octanes**	pure isomers and isomeric mixture	3	F1	II	Mixture of hydrocarbons
1263	**Paint** or **Paint related material**	including paint, lacquer, enamel, stain, shellac, varnish, polish, liquid filler and liquid lacquer base or including paint thinning and reducing compound	3	F1	I/II/III	Rule for collective entries
1265	**Pentanes**	n-Pentane	3	F1	II	Mixture of hydrocarbons
1266	**Perfumery products**	with flammable solvents	3	F1	I/II/III	Rule for collective entries
1268	Coal tar naphtha	vapour pressure at 50 °C not more than 110 kPa	3	F1	II	Mixture of hydrocarbons
1268	**Petroleum distillates, n.o.s.** or **Petroleum products, n.o.s.**		3	F1	I/II/III	Rule for collective entries
1274	**n-Propanol**		3	F1	II/III	Acetic acid
1275	**Propionaldehyde**		3	F1	II	Mixture of hydrocarbons
1276	**n-Propyl acetate**		3	F1	II	n-Butyl acetate/ n-butyl acetate-saturated wetting solution
1277	**Propylamine**	n-Propylamine	3	FC	II	Mixture of hydrocarbons **and** wetting solution
1281	**Propyl formates**	pure isomers and isomeric mixture	3	F1	II	n-Butyl acetate/ n-butyl acetate-saturated wetting solution
1282	**Pyridine**		3	F1	II	Mixture of hydrocarbons
1286	**Rosin oil**		3	F1	I/II/III	Rule for collective entries
1287	**Rubber solution**		3	F1	I/II/III	Rule for collective entries
1296	**Triethylamine**		3	FC	II	Mixture of hydrocarbons **and** wetting solution
1297	**Trimethylamine, aqueous solution**	not more than 50% trimethylamine, by mass	3	FC	I/II/III	Mixture of hydrocarbons **and** wetting solution

UN No.	Proper shipping name or technical name	Description	Class	Classification Code	Packing group	Standard liquid
	3.1.2	3.1.2	2.2	2.2	2.1.1.3	
(1)	(2a)	(2b)	(3a)	(3b)	(4)	(5)
1301	**Vinyl acetate, stabilized**		3	F1	II	n-Butyl acetate/ n-butyl acetate-saturated wetting solution
1306	**Wood preservatives, liquid**		3	F1	II/III	Rule for collective entries
1547	**Aniline**		6.1	T1	II	Acetic acid
1590	**Dichloroanilines, liquid**	pure isomers and isomeric mixture	6.1	T1	II	Acetic acid
1602	**Dye, liquid, toxic, n.o.s.** or **Dye intermediate, liquid, toxic, n.o.s.**		6.1	T1	I/II/III	Rule for collective entries
1604	**Ethylenediamine**		8	CF1	II	Mixture of hydrocarbons **and** wetting solution
1715	**Acetic anhydride**		8	CF1	II	Acetic acid
1717	**Acetyl chloride**		3	FC	II	n-Butyl acetate/ n-butyl acetate-saturated wetting solution
1718	**Butyl acid phosphate**		8	C3	III	Wetting solution
1719	Hydrogen sulphide	aqueous solution	8	C5	III	Acetic acid
1719	**Caustic alkali liquid, n.o.s.**	inorganic	8	C5	II/III	Rule for collective entries
1730	**Antimony pentachloride, liquid**	pure	8	C1	II	Water
1736	**Benzoyl chloride**		8	C3	II	Mixture of hydrocarbons **and** wetting solution
1750	**Chloroacetic acid solution**	aqueous solution	6.1	TC1	II	Acetic acid
1750	**Chloroacetic acid solution**	mixtures of mono- and dichloroacetic acid	6.1	TC1	II	Acetic acid
1752	**Chloroacetyl chloride**		6.1	TC1	I	n-Butyl acetate/ n-butyl acetate-saturated wetting solution
1755	**Chromic acid solution**	aqueous solution with not more than 30% chromic acid	8	C1	II/III	Nitric acid
1760	Cyanamide	aqueous solution with not more than 50% cyanamide	8	C9	II	Water
1760	O,O-Diethyl-dithiophosphoric acid		8	C9	II	n-Butyl acetate/ n-butyl acetate-saturated wetting solution
1760	O,O-Diisopropyl-dithiophosphoric acid		8	C9	II	n-Butyl acetate/ n-butyl acetate-saturated wetting solution
1760	O,O-Di-n-propyl-dithiophosphoric acid		8	C9	II	n-Butyl acetate/ n-butyl acetate-saturated wetting solution
1760	**Corrosive liquid, n.o.s.**	flashpoint more than 61 °C	8	C9	I/II/III	Rule for collective entries
1761	**Cupriethylenediamine solution**	aqueous solution	8	CT1	II/III	Mixture of hydrocarbons **and** wetting solution
1764	**Dichloroacetic acid**		8	C3	II	Acetic acid
1775	**Fluoroboric acid**	aqueous solution with not more than 50% fluoroboric acid	8	C1	II	Water
1778	**Fluorosilicic acid**		8	C1	II	Water

UN No.	Proper shipping name or technical name	Description	Class	Classification Code	Packing group	Standard liquid
	3.1.2	3.1.2	2.2	2.2	2.1.1.3	
(1)	(2a)	(2b)	(3a)	(3b)	(4)	(5)
1779	**Formic acid**		8	C3	II	Acetic acid
1783	**Hexamethylenediamine solution**	aqueous solution	8	C7	II/III	Mixture of hydrocarbons **and** wetting solution
1787	**Hydriodic acid**	aqueous solution	8	C1	II/III	Water
1788	**Hydrobromic acid**	aqueous solution	8	C1	II/III	Water
1789	**Hydrochloric acid**	not more than 38% aqueous solution	8	C1	II/III	Water
1790	**Hydrofluoric acid**	with not more than 60% hydrofluoric acid	8	CT1	II	Water the permissible period of use: not more than 2 years
1791	**Hypochlorite solution**	aqueous solution, containing wetting agents as customary in trade	8	C9	II/III	Nitric acid **and** wetting solution *
1791	**Hypochlorite solution**	aqueous solution	8	C9	II/III	Nitric acid *
* *For UN 1791: Test to be carried out only with vent. If the test is carried out with nitric acid as the standard liquid, an acid-resistant vent and gasket shall be used. For hypochlorite solutions, vents and gaskets of the same design type, resistant to hypochlorite (e.g. of silicone rubber) but not resistant to nitric acid, are also permitted.*						
1793	**Isopropyl acid phosphate**		8	C3	III	Wetting solution
1802	**Perchloric acid**	aqueous solution with not more than 50% acid, by mass	8	CO1	II	Water
1803	**Phenolsulphonic acid, liquid**	isomeric mixture	8	C3	II	Water
1805	**Phosphoric acid, solution**		8	C1	III	Water
1814	**Potassium hydroxide solution**	aqueous solution	8	C5	II/III	Water
1824	**Sodium hydroxide solution**	aqueous solution	8	C5	II/III	Water
1830	**Sulphuric acid**	with more than 51% pure acid	8	C1	II	Water
1832	**Sulphuric acid, spent**	chemical stable	8	C1	II	Water
1833	**Sulphurous acid**		8	C1	II	Water
1835	**Tetramethylammonium hydroxide, solution**	aqueous solution, flashpoint more than 61 °C	8	C7	II	Water
1840	**Zinc chloride solution**	aqueous solution	8	C1	III	Water
1848	**Propionic acid**		8	C3	III	n-Butyl acetate/ n-butyl acetate-saturated wetting solution
1862	**Ethyl crotonate**		3	F1	II	n-Butyl acetate/ n-butyl acetate-saturated wetting solution
1863	**Fuel, aviation, turbine engine**		3	F1	I/II/III	Mixture of hydrocarbons
1866	**Resin solution**	flammable	3	F1	I/II/III	Rule for collective entries
1902	**Diisooctyl acid phosphate**		8	C3	III	Wetting solution
1906	**Sludge acid**		8	C1	II	Nitric acid
1908	**Chlorite solution**	aqueous solution	8	C9	II/III	Acetic acid
1914	**Butyl propionates**		3	F1	III	n-Butyl acetate/ n-butyl acetate-saturated wetting solution
1915	**Cyclohexanone**		3	F1	III	Mixture of hydrocarbons
1917	**Ethyl acrylate, stabilized**		3	F1	II	n-Butyl acetate/ n-butyl acetate-saturated wetting solution

UN No.	Proper shipping name or technical name	Description	Class	Classification Code	Packing group	Standard liquid
	3.1.2	3.1.2	2.2	2.2	2.1.1.3	
(1)	(2a)	(2b)	(3a)	(3b)	(4)	(5)
1919	**Methyl acrylate, stabilized**		3	F1	II	n-Butyl acetate/ n-butyl acetate-saturated wetting solution
1920	**Nonanes**	pure isomers and isomeric mixture, flashpoint between 23 °C and 61 °C	3	F1	III	Mixture of hydrocarbons
1935	**Cyanide solution, n.o.s.**	inorganic	6.1	T4	I/II/III	Water
1940	**Thioglycolic acid**		8	C3	II	Acetic acid
1986	**Alcohols, flammable, toxic, n.o.s.**		3	FT1	I/II/III	Rule for collective entries
1987	Cyclohexanol	technical pure	3	F1	III	Acetic acid
1987	**Alcohols, n.o.s.**		3	F1	II/III	Rule for collective entries
1988	**Aldehydes, flammable, toxic, n.o.s.**		3	FT1	I/II/III	Rule for collective entries
1989	**Aldehydes, n.o.s.**		3	F1	I/II/III	Rule for collective entries
1992	2,6-cis-Dimethyl-morpholine		3	FT1	III	Mixture of hydrocarbons
1992	**Flammable liquid, toxic, n.o.s.**		3	FT1	I/II/III	Rule for collective entries
1993	Propionic acid vinyl ester		3	F1	II	n-Butyl acetate/ n-butyl acetate-saturated wetting solution
1993	(1-Methoxy-2-propyl) acetate		3	F1	III	n-Butyl acetate/ n-butyl acetate-saturated wetting solution
1993	**Flammable liquid, n.o.s.**		3	F1	I/II/III	Rule for collective entries
2014	**Hydrogen peroxide, aqueous solution**	with not less than 20% but not more than 60% hydrogen peroxide, stabilized as necessary	5.1	OC1	II	Nitric acid
2022	**Cresylic acid**	liquid mixture containing cresols, xylenols and methyl phenols	6.1	TC1	II	Acetic acid
2030	**Hydrazine aqueous solution**	with not less than 37% but not more than 64% hydrazine, by mass	8	CT1	II	Water
2030	Hydrazine hydrate	aqueous solution with 64% hydrazine	8	CT1	II	Water
2031	**Nitric acid**	other than red fuming, with not more than 55% pure acid	8	CO1	II	Nitric acid
2045	**Isobutyraldehyde**		3	F1	II	Mixture of hydrocarbons
2050	**Diisobutylene isomeric compounds**		3	F1	II	Mixture of hydrocarbons
2053	**Methyl isobutyl carbinol**		3	F1	III	Acetic acid
2054	**Morpholine**		3	CF1	I	Mixture of hydrocarbons
2057	**Tripropylene**		3	F1	II/III	Mixture of hydrocarbons
2058	**Valeraldehyde**	pure isomers and isomeric mixture	3	F1	II	Mixture of hydrocarbons
2059	**Nitrocellulose solution, flammable**		3	D	I/II/III	Rule for collective entries: Deviating from the general procedure this rule may be applied to solvents of classification code F1
2075	**Chloral, anhydrous, stabilized**		6.1	T1	II	Wetting solution

UN No.	Proper shipping name or technical name	Description	Class	Classifi-cation Code	Packing group	Standard liquid
	3.1.2	3.1.2	2.2	2.2	2.1.1.3	
(1)	(2a)	(2b)	(3a)	(3b)	(4)	(5)
2076	**Cresols, liquid**	pure isomers and isomeric mixture	6.1	TC1	II	Acetic acid
2078	**Toluene diisocyanate**	liquid	6.1	T1	II	n-Butyl acetate/ n-butyl acetate-saturated wetting solution
2079	**Diethylenetriamine**		8	C7	II	Mixture of hydrocarbons
2209	**Formaldehyde solution**	aqueous solution with 37% Form-aldehyde, methanol content: 8-10%	8	C9	III	Acetic acid
2209	**Formaldehyde solution**	aqueous solution, with not less than 25% formaldehyde	8	C9	III	Water
2218	**Acrylic acid, stabilized**		8	CF1	II	n-Butyl acetate/ n-butyl acetate-saturated wetting solution
2227	**n-Butyl methacrylate, stabilized**		3	F1	III	n-Butyl acetate/ n-butyl acetate-saturated wetting solution
2235	**Chlorobenzyl chlorides, liquid**	para-Chlorobenzyl chloride	6.1	T2	III	Mixture of hydrocarbons
2241	**Cycloheptane**		3	F1	II	Mixture of hydrocarbons
2242	**Cycloheptene**		3	F1	II	Mixture of hydrocarbons
2243	**Cyclohexyl acetate**		3	F1	III	n-Butyl acetate/ n-butyl acetate-saturated wetting solution
2244	**Cyclopentanol**		3	F1	III	Acetic acid
2245	**Cyclopentanone**		3	F1	III	Mixture of hydrocarbons
2247	**n-Decane**		3	F1	III	Mixture of hydrocarbons
2248	**Di-n-butylamine**		8	CF1	II	Mixture of hydrocarbons
2258	**1,2-Propylenediamine**		8	CF1	II	Mixture of hydrocarbons **and** wetting solution
2259	**Triethylenetetramine**		8	C7	II	Water
2260	**Tripropylamine**		3	FC	III	Mixture of hydrocarbons **and** wetting solution
2263	**Dimethylcyclohexanes**	pure isomers and isomeric mixture	3	F1	II	Mixture of hydrocarbons
2264	**N,N-Dimethyl-cyclohexylamine**		8	CF1	II	Mixture of hydrocarbons **and** wetting solution
2265	**N,N-Dimethyl-formamide**		3	F1	III	n-Butyl acetate/ n-butyl acetate-saturated wetting solution
2266	**Dimethyl-N-propylamine**		3	FC	II	Mixture of hydrocarbons **and** wetting solution
2269	**3,3'-Imino-dipropylamine**		8	C7	III	Mixture of hydrocarbons **and** wetting solution
2270	**Ethylamine, aqueous solution**	with not less than 50% but not more than 70% ethylamine, flashpoint below 23 °C, corrosive or slightly corrosive	3	FC	II	Mixture of hydrocarbons **and** wetting solution

UN No.	Proper shipping name or technical name	Description	Class	Classification Code	Packing group	Standard liquid
	3.1.2	3.1.2	2.2	2.2	2.1.1.3	
(1)	(2a)	(2b)	(3a)	(3b)	(4)	(5)
2275	**2-Ethylbutanol**		3	F1	III	n-Butyl acetate/ n-butyl acetate-saturated wetting solution
2276	**2-Ethylhexylamine**		3	FC	III	Mixture of hydrocarbons **and** wetting solution
2277	**Ethyl methacrylate, stabilized**		3	F1	II	n-Butyl acetate/ n-butyl acetate-saturated wetting solution
2278	**n-Heptene**		3	F1	II	Mixture of hydrocarbons
2282	**Hexanols**	pure isomers and isomeric mixture	3	F1	III	n-Butyl acetate/ n-butyl acetate-saturated wetting solution
2283	**Isobutyl methacrylate, stabilized**		3	F1	III	n-Butyl acetate/ n-butyl acetate-saturated wetting solution
2286	**Pentamethylheptane**		3	F1	III	Mixture of hydrocarbons
2287	**Isoheptenes**		3	F1	II	Mixture of hydrocarbons
2288	**Isohexenes**		3	F1	II	Mixture of hydrocarbons
2289	**Isophoronediamine**		8	C7	III	Mixture of hydrocarbons **and** wetting solution
2293	**4-Methoxy-4-methyl-pentan-2-one**		3	F1	III	Mixture of hydrocarbons
2296	**Methylcyclohexane**		3	F1	II	Mixture of hydrocarbons
2297	**Methylcyclohexanone**	pure isomers and isomeric mixture	3	F1	III	Mixture of hydrocarbons
2298	**Methylcyclopentane**		3	F1	II	Mixture of hydrocarbons
2302	**5-Methylhexan-2-one**		3	F1	III	Mixture of hydrocarbons
2308	**Nitrosylsulphuric acid, liquid**		8	C1	II	Water
2309	**Octadienes**		3	F1	II	Mixture of hydrocarbons
2313	**Picolines**	pure isomers and isomeric mixture	3	F1	III	Mixture of hydrocarbons
2317	**Sodium cuprocyanide solution**	aqueous solution	6.1	T4	I	Water
2320	**Tetraethylenepentamine**		8	C7	III	Mixture of hydrocarbons **and** wetting solution
2324	**Triisobutylene**	mixture of C12-mono-olefines, flashpoint between 23 °C and 61 °C	3	F1	III	Mixture of hydrocarbons
2326	**Trimethyl-cyclohexylamine**		8	C7	III	Mixture of hydrocarbons **and** wetting solution
2327	**Trimethylhexamethylene-diamines**	pure isomers and isomeric mixture	8	C7	III	Mixture of hydrocarbons **and** wetting solution
2330	**Undecane**		3	F1	III	Mixture of hydrocarbons
2336	**Allyl formate**		3	FT1	I	n-Butyl acetate/ n-butyl acetate-saturated wetting solution
2348	**Butyl acrylates, stabilized**	pure isomers and isomeric mixture	3	F1	III	n-Butyl acetate/ n-butyl acetate-saturated wetting solution

UN No.	Proper shipping name or technical name	Description	Class	Classification Code	Packing group	Standard liquid
	3.1.2	3.1.2	2.2	2.2	2.1.1.3	
(1)	(2a)	(2b)	(3a)	(3b)	(4)	(5)
2357	**Cyclohexylamine**	flashpoint between 23 °C and 61 °C	8	CF1	II	Mixture of hydrocarbons **and** wetting solution
2361	**Diisobutylamine**		3	FC	III	Mixture of hydrocarbons **and** wetting solution
2366	**Diethyl carbonate**		3	F1	III	n-Butyl acetate/ n-butyl acetate-saturated wetting solution
2367	**alpha-Methyl-valeraldehyde**		3	F1	II	Mixture of hydrocarbons
2370	**1-Hexene**		3	F1	II	Mixture of hydrocarbons
2372	**1,2-Di-(dimethylamino)-ethane**		3	F1	II	Mixture of hydrocarbons **and** wetting solution
2379	**1,3-Dimethylbutylamine**		3	FC	II	Mixture of hydrocarbons **and** wetting solution
2383	**Dipropylamine**		3	FC	II	Mixture of hydrocarbons **and** wetting solution
2385	**Ethyl isobutyrate**		3	F1	II	n-Butyl acetate/ n-butyl acetate-saturated wetting solution
2393	**Isobutyl formate**		3	F1	II	n-Butyl acetate/ n-butyl acetate-saturated wetting solution
2394	**Isobutyl propionate**	flashpoint between 23 °C and 61 °C	3	F1	III	n-Butyl acetate/ n-butyl acetate-saturated wetting solution
2396	**Methacrylaldehyde, stabilized**		3	FT1	II	Mixture of hydrocarbons
2400	**Methyl isovalerate**		3	F1	II	n-Butyl acetate/ n-butyl acetate-saturated wetting solution
2401	**Piperidine**		8	CF1	I	Mixture of hydrocarbons **and** wetting solution
2403	**Isopropenyl acetate**		3	F1	II	n-Butyl acetate/ n-butyl acetate-saturated wetting solution
2405	**Isopropyl butyrate**		3	F1	III	n-Butyl acetate/ n-butyl acetate-saturated wetting solution
2406	**Isopropyl isobutyrate**		3	F1	II	n-Butyl acetate/ n-butyl acetate-saturated wetting solution
2409	**Isopropyl propionate**		3	F1	II	n-Butyl acetate/ n-butyl acetate-saturated wetting solution
2410	**1,2,3,6-Tetrahydro-pyridine**		3	F1	II	Mixture of hydrocarbons
2427	**Potassium chlorate, aqueous solution**		5.1	O1	II/III	Water
2428	**Sodium chlorate, aqueous solution**		5.1	O1	II/III	Water

UN No.	Proper shipping name or technical name	Description	Class	Classification Code	Packing group	Standard liquid
	3.1.2	3.1.2	2.2	2.2	2.1.1.3	
(1)	(2a)	(2b)	(3a)	(3b)	(4)	(5)
2429	**Calcium chlorate, aqueous solution**		5.1	O1	II/III	Water
2436	**Thioacetic acid**		3	F1	II	Acetic acid
2457	**2,3-Dimethylbutane**		3	F1	II	Mixture of hydrocarbons
2491	**Ethanolamine**		8	C7	III	Wetting solution
2491	**Ethanolamine solution**	aqueous solution	8	C7	III	Wetting solution
2496	**Propionic anhydride**		8	C3	III	n-Butyl acetate/ n-butyl acetate-saturated wetting solution
2524	**Ethyl orthoformate**		3	F1	III	n-Butyl acetate/ n-butyl acetate-saturated wetting solution
2526	**Furfurylamine**		3	FC	III	Mixture of hydrocarbons **and** wetting solution
2527	**Isobutyl acrylate, stabilized**		3	F1	III	n-Butyl acetate/ n-butyl acetate-saturated wetting solution
2528	**Isobutyl isobutyrate**		3	F1	III	n-Butyl acetate/ n-butyl acetate-saturated wetting solution
2529	**Isobutyric acid**		3	FC	III	n-Butyl acetate/ n-butyl acetate-saturated wetting solution
2531	**Methacrylic acid, stabilized**		8	C3	II	n-Butyl acetate/ n-butyl acetate-saturated wetting solution
2542	**Tributylamine**		6.1	T1	II	Mixture of hydrocarbons
2560	**2-Methylpentan-2-ol**		3	F1	III	n-Butyl acetate/ n-butyl acetate-saturated wetting solution
2564	**Trichloroacetic acid solution**	aqueous solution	8	C3	II/III	Acetic acid
2565	**Dicyclohexylamine**		8	C7	III	Mixture of hydrocarbons **and** wetting solution
2571	Ethylsulphuric acid		8	C3	II	n-Butyl acetate/ n-butyl acetate-saturated wetting solution
2571	**Alkylsulphuric acids**		8	C3	II	Rule for collective entries
2580	**Aluminium bromide solution**	aqueous solution	8	C1	III	Water
2581	**Aluminium chloride solution**	aqueous solution	8	C1	III	Water
2582	**Ferric chloride solution**	aqueous solution	8	C1	III	Water
2584	Methane sulphonic acid	with more than 5% free sulphuric acid	8	C1	II	Water
2584	**Alkylsulphonic acids, liquid**	with more than 5% free sulphuric acid	8	C1	II	n-Butyl acetate/ n-butyl acetate-saturated wetting solution
2584	Benzene sulphonic acid	with more than 5% free sulphuric acid	8	C1	II	Water
2584	Toluene sulphonic acids	with more than 5% free sulphuric acid	8	C1	II	Water

UN No.	Proper shipping name or technical name	Description	Class	Classification Code	Packing group	Standard liquid
	3.1.2	3.1.2	2.2	2.2	2.1.1.3	
(1)	(2a)	(2b)	(3a)	(3b)	(4)	(5)
2584	**Arylsulphonic acids, liquid**	with more than 5% free sulphuric acid	8	C1	II	n-Butyl acetate/ n-butyl acetate-saturated wetting solution
2586	Methane sulfonic acid	with not more than 5% free sulphuric acid	8	C1	III	Water
2586	**Alkylsulphonic acids, liquid**	with not more than 5% free sulphuric acid	8	C1	III	n-Butyl acetate/ n-butyl acetate-saturated wetting solution
2586	Benzene sulphonic acid	with not more than 5% free sulphuric acid	8	C1	III	Water
2586	Toluene sulphonic acids	with not more than 5% free sulphuric acid	8	C1	III	Water
2586	**Arylsulphonic acids, liquid**	with not more than 5% free sulphuric acid	8	C1	III	n-Butyl acetate/ n-butyl acetate-saturated wetting solution
2610	**Triallylamine**		3	FC	III	Mixture of hydrocarbons **and** wetting solution
2614	**Methallyl alcohol**		3	F1	III	Acetic acid
2617	**Methylcyclohexanols**	pure isomers and isomeric mixture, flashpoint between 23 °C and 61 °C	3	F1	III	Acetic acid
2619	**Benzyldimethylamine**		8	CF1	II	Mixture of hydrocarbons **and** wetting solution
2620	**Amyl butyrates**	pure isomers and isomeric mixture, flashpoint between 23 °C and 61 °C	3	F1	III	n-Butyl acetate/ n-butyl acetate-saturated wetting solution
2622	**Glycidaldehyde**	flashpoint below 23 °C	3	FT1	II	Mixture of hydrocarbons
2626	**Chloric acid, aqueous solution**	with not more than 10% chloric acid	5.1	O1	II	Nitric acid
2656	**Quinoline**	flashpoint more than 61 °C	6.1	T1	III	Water
2672	**Ammonia solution**	relative density between 0.880 and 0.957 at 15 °C in water, with more than 10% but not more than 35% ammonia	8	C5	III	Water
2683	**Ammonium sulphide solution**	aqueous solution, flashpoint between 23 °C and 61 °C	8	CFT	II	Acetic acid
2684	**3-Diethylamino-propylamine**		3	FC	III	Mixture of hydrocarbons **and** wetting solution
2685	**N,N-Diethylethylene-diamine**		8	CF1	II	Mixture of hydrocarbons **and** wetting solution
2693	**Bisulphites, aqueous solution, n.o.s.**	inorganic	8	C1	III	Water
2707	**Dimethyldioxanes**	pure isomers and isomeric mixture	3	F1	II/III	Mixture of hydrocarbons
2733	**Amines, flammable, corrosive , n.o.s.** or **Polyamines, flammable, corrosive, n.o.s.**		3	FC	I/II/III	Mixture of hydrocarbons **and** wetting solution
2734	Di-sec-butylamine		8	CF1	II	Mixture of hydrocarbons

UN No.	Proper shipping name or technical name	Description	Class	Classification Code	Packing group	Standard liquid
	3.1.2	3.1.2	2.2	2.2	2.1.1.3	
(1)	(2a)	(2b)	(3a)	(3b)	(4)	(5)
2734	**Amines, liquid, corrosive, flammable, n.o.s.** or **Polyamines, liquid, corrosive, flammable, n.o.s.**		8	CF1	I/II	Mixture of hydrocarbons **and** wetting solution
2735	**Amines, liquid, corrosive, n.o.s.** or **Polyamines, liquid, corrosive, n.o.s.**		8	C7	I/II/III	Mixture of hydrocarbons **and** wetting solution
2739	**Butyric anhydride**		8	C3	III	n-Butyl acetate/ n-butyl acetate-saturated wetting solution
2789	**Acetic acid, glacial** or **Acetic acid solution**	aqueous solution, more than 80% acid, by mass	8	CF1	II	Acetic acid
2790	**Acetic acid solution**	aqueous solution, more than 10% but not more than 80% acid, by mass	8	C3	II/III	Acetic acid
2796	**Sulphuric acid**	with not more than 51% pure acid	8	C1	II	Water
2797	**Battery fluid, alkali**	Potassium/Sodium hydroxide, aqueous solution	8	C5	II	Water
2810	2-Chloro-6-fluorobenzyl chloride	stabilized	6.1	T1	III	Mixture of hydrocarbons
2810	2-Phenylethanol		6.1	T1	III	Acetic acid
2810	Ethylene glycol monohexyl ether		6.1	T1	III	Acetic acid
2810	**Toxic liquid, organic, n.o.s.**		6.1	T1	I/II/III	Rule for collective entries
2815	**N-Aminoethylpiperazine**		8	C7	III	Mixture of hydrocarbons **and** wetting solution
2818	**Ammonium polysulphide solution**	aqueous solution	8	CT1	II/III	Acetic acid
2819	**Amyl acid phosphate**		8	C3	III	Wetting solution
2820	**Butyric acid**	n-Butyric acid	8	C3	III	n-Butyl acetate/ n-butyl acetate-saturated wetting solution
2821	**Phenol solution**	aqueous solution, toxic, non-alkaline	6.1	T1	II/III	Acetic acid
2829	**Caproic acid**	n-Caproic acid	8	C3	III	n-Butyl acetate/ n-butyl acetate-saturated wetting solution
2837	**Bisulphates, aqueous solution**		8	C1	II/III	Water
2838	**Vinyl butyrate, stabilized**		3	F1	II	n-Butyl acetate/ n-butyl acetate-saturated wetting solution
2841	**Di-n-amylamine**		3	FT1	III	Mixture of hydrocarbons **and** wetting solution
2850	**Propylene tetramer**	mixture of C12-monoolefines, flashpoint between 23 °C and 61 °C	3	F1	III	Mixture of hydrocarbons

UN No.	Proper shipping name or technical name	Description	Class	Classification Code	Packing group	Standard liquid
	3.1.2	3.1.2	2.2	2.2	2.1.1.3	
(1)	(2a)	(2b)	(3a)	(3b)	(4)	(5)
2873	**Dibutylaminoethanol**	N,N-Di-n-butylaminoethanol	6.1	T1	III	Acetic acid
2874	**Furfuryl alcohol**		6.1	T1	III	Acetic acid
2920	O,O-Diethyl-dithiophosphoric acid	flashpoint between 23 °C and 61 °C	8	CF1	II	n-Butylacetate/n-Butylacetate-saturated wetting solution
2920	O,O-Dimethyl-dithiophosphoric acid	flashpoint between 23 °C and 61 °C	8	CF1	II	Wetting solution
2920	Hydrogen bromide	33% solution in glacial acetic acid	8	CF1	II	Wetting solution
2920	Tetramethylammonium hydroxide	aqueous solution, flashpoint between 23 °C and 61 °C	8	CF1	II	Water
2920	**Corrosive liquid, flammable, n.o.s.**		8	CF1	I/II	Rule for collective entries
2922	Ammonium sulphide	aqueous solution, flashpoint more than 61 °C	8	CT1	II	Water
2922	Cresols	aqueous alkaline solution, mixture of sodium and potassium cresolate,	8	CT1	II	Acetic acid
2922	Phenol	aqueous alkaline solution, mixture of sodium and potassium phenolate	8	CT1	II	Acetic acid
2922	Sodium hydrogen difluoride	aqueous solution	8	CT1	III	Water
2922	**Corrosive liquid, toxic, n.o.s.**		8	CT1	I/II/III	Rule for collective entries
2924	**Flammable liquid, corrosive, n.o.s.**	slightly corrosive	3	FC	I/II/III	Rule for collective entries
2927	**Toxic liquid, corrosive, organic, n.o.s.**		6.1	TC1	I/II	Rule for collective entries
2933	**Methyl 2-chloro-propionate**		3	F1	III	n-Butyl acetate/ n-butyl acetate-saturated wetting solution
2934	**Isopropyl 2-chloro-propionate**		3	F1	III	n-Butyl acetate/ n-butyl acetate-saturated wetting solution
2935	**Ethyl 2-chloropropionate**		3	F1	III	n-Butyl acetate/ n-butyl acetate-saturated wetting solution
2936	**Thiolactic acid**		6.1	T1	II	Acetic acid
2941	**Fluoroanilines**	pure isomers and isomeric mixture	6.1	T1	III	Acetic acid
2943	**Tetrahydrofurfurylamine**		3	F1	III	Mixture of hydrocarbons
2945	**N-Methylbutylamine**		3	FC	II	Mixture of hydrocarbons **and** wetting solution
2946	**2-Amino-5-diethyl-aminopentane**		6.1	T1	III	Mixture of hydrocarbons **and** wetting solution
2947	**Isopropyl chloroacetate**		3	F1	III	n-Butyl acetate/ n-butyl acetate-saturated wetting solution
2984	**Hydrogen peroxide, aqueous solution**	with not less than 8% but less than 20% hydrogen peroxide, stabilized as necessary	5.1	O1	III	Nitric acid

UN No.	Proper shipping name or technical name	Description	Class	Classification Code	Packing group	Standard liquid
	3.1.2	3.1.2	2.2	2.2	2.1.1.3	
(1)	(2a)	(2b)	(3a)	(3b)	(4)	(5)
3056	**n-Heptaldehyde**		3	F1	III	Mixture of hydrocarbons
3065	**Alcoholic beverages**	with more than 24% alcohol by volume	3	F1	II/III	Acetic acid
3066	**Paint** or **Paint related material**	including paint, lacquer, enamel, stain, shellac, varnish, polish, liquid filler and liquid lacquer base or including paint thinning and reducing compound	8	C9	II/III	Rule for collective entries
3079	**Methacrylonitrile, stabilized**		3	FT1	I	n-Butyl acetate/ n-butyl acetate-saturated wetting solution
3082	sec-Alcohol C_6-C_{17} poly (3-6) ethoxylate		9	M6	III	n-Butyl acetate/ n-butyl acetate-saturated wetting solution **and** mixture of hydrocarbons
3082	Alcohol C_{12}-C_{15} poly (1-3) ethoxylate		9	M6	III	n-Butyl acetate/ n-butyl acetate-saturated wetting solution **and** mixture of hydrocarbons
3082	Alcohol C_{13}-C_{15} poly (1-6) ethoxylate		9	M6	III	n-Butyl acetate/ n-butyl acetate-saturated wetting solution **and** mixture of hydrocarbons
3082	Aviation turbine fuel JP-5	flashpoint more than 61 °C	9	M6	III	Mixture of hydrocarbons
3082	Aviation turbine fuel JP-7	flashpoint more than 61 °C	9	M6	III	Mixture of hydrocarbons
3082	Coal tar	flashpoint more than 61 °C	9	M6	III	Mixture of hydrocarbons
3082	Coal tar naphtha	flashpoint more than 61 °C	9	M6	III	Mixture of hydrocarbons
3082	Creosote produced of coal tar	flashpoint more than 61 °C	9	M6	III	Mixture of hydrocarbons
3082	Creosote produced of wood tar	flashpoint more than 61 °C	9	M6	III	Mixture of hydrocarbons
3082	Cresyl diphenyl phosphate		9	M6	III	Wetting solution
3082	Decyl acrylate		9	M6	III	n-Butyl acetate/ n-butyl acetate-saturated wetting solution **and** mixture of hydrocarbons
3082	Diisobutyl phthalate		9	M6	III	n-Butyl acetate/ n-butyl acetate-saturated wetting solution **and** mixture of hydrocarbons
3082	Di-n-butyl phthalate		9	M6	III	n-Butyl acetate/ n-butyl acetate-saturated wetting solution **and** mixture of hydrocarbons
3082	Hydrocarbons	liquid, flashpoint more than 61 °C, environmentally hazardous	9	M6	III	Rule for collective entries

UN No.	Proper shipping name or technical name	Description	Class	Classification Code	Packing group	Standard liquid
	3.1.2	3.1.2	2.2	2.2	2.1.1.3	
(1)	(2a)	(2b)	(3a)	(3b)	(4)	(5)
3082	Isodecyl diphenyl phosphate		9	M6	III	Wetting solution
3082	Methylnaphthalenes	isomeric mixture, liquid	9	M6	III	Mixture of hydrocarbons
3082	Triaryl phosphates	n.o.s.	9	M6	III	Wetting solution
3082	Tricresyl phosphate	with not more than 3% ortho-isomer	9	M6	III	Wetting solution
3082	Trixylenyl phosphate		9	M6	III	Wetting solution
3082	Zinc alkyl dithiophosphate	C3-C14	9	M6	III	Wetting solution
3082	Zinc aryl dithiophosphate	C7-C16	9	M6	III	Wetting solution
3082	**Environmentally hazardous substance, liquid, n.o.s.**		9	M6	III	Rule for collective entries
3099	**oxic, n.o.s.**		5.1	OT1	I/II/III	Rule for collective entries
3101 3103 3105 3107 3109 3111 3113 3115 3117 3119	**Organic Peroxide, Type B, C, D, E** or **F, liquid** or **Organic Peroxide, Type B, C, D, E** or **F, liquid, temperature controlled**		5.2	P1		n-Butyl acetate/ n-butyl acetate-saturated wetting solution **and** mixture of hydrocarbons **and** nitric acid**
*** For UN Nos. 3101, 3103, 3105, 3107, 3109, 3111, 3113, 3115, 3117, 3119 (tert-butyl hydroperoxide with more than 40% peroxide content and peroxyacetic acids are excluded): All organic peroxides in a technically pure form or in solution in solvents which, as far as their compatibility is concerned, are covered by the standard liquid "mixture of hydrocarbons" in this list. Compatibility of vents and gaskets with organic peroxides may be verified, also independently of the design type test, by laboratory tests with nitric acid.*						
3145	Butylphenols	liquid, n.o.s.	8	C3	I/II/III	Acetic acid
3145	**Alkylphenols, liquid, n.o.s.**	including C2 to C12 homologues	8	C3	I/II/III	n-Butyl acetate/ n-butyl acetate-saturated wetting solution
3149	**Hydrogen peroxide and peroxyacetic acid mixture, stabilized**	with UN 2790 acetic acid, UN 2796 sulphuric acid and/or UN 1805 phosphoric acid, water and not more than 5% peroxyacetic acid	5.1	OC1	II	Wetting solution **and** nitric acid
3210	**Chlorates, inorganic, aqueous solution, n.o.s.**		5.1	O1	II/III	Water
3211	**Perchlorates, inorganic, aqueous solution, n.o.s.**		5.1	O1	II/III	Water
3213	**Bromates, inorganic, aqueous solution, n.o.s.**		5.1	O1	II/III	Water
3214	**Permanganates, inorganic, aqueous solution, n.o.s.**		5.1	O1	II	Water
3216	**Persulphates, inorganic, aqueous solution, n.o.s.**		5.1	O1	III	Wetting solution
3218	**Nitrates, inorganic, aqueous solution, n.o.s.**		5.1	O1	II/III	Water
3219	**Nitrites, inorganic, aqueous solution, n.o.s.**		5.1	O1	II/III	Water
3264	Cupric chloride	aqueous solution, slightly corrosive	8	C1	III	Water

UN No.	Proper shipping name or technical name	Description	Class	Classification Code	Packing group	Standard liquid
	3.1.2	3.1.2	2.2	2.2	2.1.1.3	
(1)	(2a)	(2b)	(3a)	(3b)	(4)	(5)
3264	Hydroxylamine sulphate	25% aqueous solution	8	C1	III	Water
3264	Phosphorous acid	aqueous solution	8	C1	III	Water
3264	**Corrosive liquid, acidic, inorganic, n.o.s.**	flashpoint more than 61 °C	8	C1	I/II/III	Rule for collective entries not applicable to mixtures having components of UN Nos.: 1830, 1832, 1906 and 2308
3265	Methoxyacetic acid		8	C3	I	n-Butyl acetate/ n-butyl acetate-saturated wetting solution
3265	Allyl succinic acid anhydride		8	C3	II	n-Butyl acetate/ n-butyl acetate-saturated wetting solution
3265	Dithioglycolic acid		8	C3	II	n-Butyl acetate/ n-butyl acetate-saturated wetting solution
3265	Butyl phosphate	mixture of mono- and di-butyl phosphate	8	C3	III	Wetting solution
3265	Caprylic acid		8	C3	III	n-Butyl acetate/ n-butyl acetate-saturated wetting solution
3265	Isovaleric acid		8	C3	III	n-Butyl acetate/ n-butyl acetate-saturated wetting solution
3265	Pelargonic acid		8	C3	III	n-Butyl acetate/ n-butyl acetate-saturated wetting solution
3265	Pyruvic acid		8	C3	III	n-Butyl acetate/ n-butyl acetate-saturated wetting solution
3265	Valeric acid		8	C3	III	Acetic acid
3265	**Corrosive liquid, acidic, organic, n.o.s.**	flashpoint more than 61 °C	8	C3	I/II/III	Rule for collective entries
3266	Sodium hydrosulphide	aqueous solution	8	C5	II	Acetic acid
3266	Sodium sulphide	aqueous solution, slightly corrosive	8	C5	III	Acetic acid
3266	**Corrosive liquid, basic, inorganic, n.o.s.**	flashpoint more than 61 °C	8	C5	I/II/III	Rule for collective entries
3267	2,2'-(Butylimino)-bisethanol		8	C7	II	Mixture of hydrocarbons **and** wetting solution
3267	**Corrosive liquid, basic, organic, n.o.s.**	flashpoint more than 61 °C	8	C7	I/II/III	Rule for collective entries
3271	Ethylene glycol monobutyl ether	flashpoint 61 °C	3	F1	III	Acetic acid
3271	**Ether, n.o.s.**		3	F1	II/III	Rule for collective entries
3272	Acrylic acid tert-butyl ester		3	F1	II	n-Butyl acetate/ n-butyl acetate-saturated wetting solution
3272	Isobutyl propionate	flashpoint below 23 °C	3	F1	II	n-Butyl acetate/ n-butyl acetate-saturated wetting solution
3272	Methyl valerate		3	F1	II	n-Butyl acetate/ n-butyl acetate-saturated wetting solution

UN No.	Proper shipping name or technical name	Description	Class	Classifi-cation Code	Packing group	Standard liquid
	3.1.2	3.1.2	2.2	2.2	2.1.1.3	
(1)	(2a)	(2b)	(3a)	(3b)	(4)	(5)
3272	Trimethyl ortho-formate		3	F1	II	n-Butyl acetate/ n-butyl acetate-saturated wetting solution
3272	Ethyl valerate		3	F1	III	n-Butyl acetate/ n-butyl acetate-saturated wetting solution
3272	Isobutyl isovalerate		3	F1	III	n-Butyl acetate/ n-butyl acetate-saturated wetting solution
3272	n-Amyl propionate		3	F1	III	n-Butyl acetate/ n-butyl acetate-saturated wetting solution
3272	n-Butylbutyrate		3	F1	III	n-Butyl acetate/ n-butyl acetate-saturated wetting solution
3272	Methyl lactate		3	F1	III	n-Butyl acetate/ n-butyl acetate-saturated wetting solution
3272	**Ester, n.o.s.**		3	F1	II/III	Rule for collective entries
3287	Sodium nitrite	40% aqueous solution	6.1	T4	III	Water
3287	**Toxic liquid, inorganic, n.o.s.**		6.1	T4	I/II/III	Rule for collective entries
3291	**Clinical waste, unspecified, n.o.s.**	liquid	6.2	I3	II	Water
3293	**Hydrazine, aqueous solution**	with not more than 37% hydrazine, by mass	6.1	T4	III	Water
3295	Heptenes	n.o.s	3	F1	II	Mixture of hydrocarbons
3295	Nonanes	flashpoint below 23 °C	3	F1	II	Mixture of hydrocarbons
3295	Decanes	n.o.s	3	F1	III	Mixture of hydrocarbons
3295	1,2,3-Trimethylbenzene		3	F1	III	Mixture of hydrocarbons
3295	**Hydrocarbons, liquid, n.o.s.**		3	F1	I/II/III	Rule for collective entries
3405	**Barium chlorate, solution**	aqueous solution	5.1	OT1	II/III	Water
3406	**Barium perchlorate, solution**	aqueous solution	5.1	OT1	II/III	Water
3408	**Lead perchlorate, solution**	aqueous solution	5.1	OT1	II/III	Water
3413	**Potassium cyanide, solution**	aqueous solution	6.1	T4	I/II/III	Water
3414	**Sodium cyanide, solution**	aqueous solution	6.1	T4	I/II/III	Water
3415	**Sodium fluoride, solution**	aqueous solution	6.1	T4	III	Water
3422	**Potassium fluoride, solution**	aqueous solution	6.1	T4	III	Water

4.1.2 Additional general provisions for the use of IBCs

4.1.2.1 When IBCs are used for the carriage of liquids with a flash-point of 61 °C (closed cup) or lower, or of powders liable to dust explosion, measures shall be taken to prevent a dangerous electrostatic discharge.

4.1.2.2 The periodic testing and inspection requirements for IBCs are provided in Chapter 6.5. An IBC shall not be filled and offered for carriage after the date of expiry of the last periodic test required by 6.5.4.14.3, or the date of expiry of the last periodic inspection required by 6.5.1.6.4. However, an IBC filled prior to the date of expiry of the last periodic test or inspection may be carried for a period not to exceed three months beyond the date of expiry of the last periodic test or inspection. In addition, an IBC may be carried after the date of expiry of the last periodic test or inspection:

(a) after emptying but before cleaning, for purposes of performing the required test or inspection prior to refilling; and

(b) unless otherwise approved by the competent authority, for a period not to exceed six months beyond the date of expiry of the last periodic test or inspection in order to allow the return of dangerous goods or residues for proper disposal or recycling.

***NOTE**: For the particulars in the transport document, see 5.4.1.1.11.*

4.1.2.3 IBCs of type 31HZ2 shall be filled to at least 80% of the volume of the outer casing.

4.1.2.4 Except for routine maintenance of metal, rigid plastics, composite and flexible IBCs performed by the owner of the IBC, whose State and name or authorized symbol is durably marked on the IBC, the party performing routine maintenance shall durably mark the IBC near the manufacturer's UN design type marking to show:

(a) The State in which the routine maintenance was carried out; and

(b) The name or authorized symbol of the party performing the routine maintenance.

4.1.3 General provisions concerning packing instructions

4.1.3.1 Packing instructions applicable to dangerous goods of Classes 1 to 9 are specified in Section 4.1.4. They are subdivided in three sub-sections depending on the type of packagings to which they apply:

Sub-section 4.1.4.1 for packagings other than IBCs and large packagings; these packing instructions are designated by an alphanumeric code starting with the letter "P" or "R" for packagings specific to RID and ADR;

Sub-section 4.1.4.2 for IBCs; these are designated by an alphanumeric code starting with the letters "IBCs";

Sub-section 4.1.4.3 for large packagings; these are designated by an alphanumeric code starting with the letters "LP".

Generally, packing instructions specify that the general provisions of 4.1.1, 4.1.2 or 4.1.3, as appropriate, are applicable. They may also require compliance with the special provisions of Sections 4.1.5, 4.1.6, 4.1.7, 4.1.8 or 4.1.9 when appropriate. Special packing provisions may also be specified in the packing instruction for individual substances or articles. They are also designated by an alphanumeric code comprising the letters:

"PP" for packagings other than IBCs and large packagings, or "RR" for special provisions specific to RID and ADR;

"B" for IBCs or "BB" for special packing provisions specific to RID and ADR;

"L" for large packagings.

Unless otherwise specified, each packaging shall conform to the applicable requirements of Part 6. Generally packing instructions do not provide guidance on compatibility and the user shall not select a packaging without checking that the substance is compatible with the packaging material selected (e.g. glass receptacles are unsuitable for most fluorides). Where glass receptacles are permitted in the packing instructions porcelain, earthenware and stoneware packagings are also allowed.

4.1.3.2 Column (8) of Table A of Chapter 3.2 shows for each article or substance the packing instruction(s) that shall be used. Columns (9a) and (9b) indicate the special packing provisions and the mixed packing provisions (see 4.1.10) applicable to specific substances or articles.

4.1.3.3 Each packing instruction shows, where applicable, the acceptable single and combination packagings. For combination packagings, the acceptable outer packagings, inner packagings and when applicable the maximum quantity permitted in each inner or outer packaging, are shown. Maximum net mass and maximum capacity are as defined in 1.2.1.

4.1.3.4 The following packagings shall not be used when the substances being carried are liable to become liquid during carriage:

Packagings

Drums:	1D and 1G
Boxes:	4A, 4B, 4C1, 4C2, 4D, 4F, 4G, 4H1 and 4H2
Bags:	5L1, 5L2, 5L3, 5H1, 5H2, 5H3, 5H4, 5M1 and 5M2
Composite packagings:	6HC, 6HD2, 6HG1, 6HG2, 6HD1, 6PC, 6PD1, 6PD2, 6PG1, 6PG2 and 6PH1

Large packagings

Flexible plastics: 51H (outer packaging)

IBCs

For substances of packing group I: All types of IBC

For substances of packing groups II and III:

Wooden:	11C, 11D and 11F
Fibreboard:	11G
Flexible:	13H1, 13H2, 13H3, 13H4, 13H5, 13L1, 13L2, 13L3, 13L4, 13M1 and 13M2
Composite:	11HZ2 and 21HZ2

For the purposes of this paragraph, substances and mixtures of substances having a melting point equal to or less than 45 °C shall be treated as solids liable to become liquid during carriage.

4.1.3.5 Where the packing instructions in this Chapter authorize the use of a particular type of packaging (e.g. 4G; 1A2), packagings bearing the same packaging identification code followed by the letters "V", "U" or "W" marked in accordance with the requirements of Part 6 (e.g. 4GV, 4GU or 4GW; 1A2V, 1A2U or 1A2W) may also be used under the same conditions and limitations applicable to the use of that type of packaging according to the relevant packing instructions. For example, a combination packaging marked with the packaging code "4GV" may be used whenever a combination packaging marked "4G" is authorized, provided the requirements in the relevant packing instruction regarding types of inner packagings and quantity limitations are respected.

4.1.3.6 All cylinders, tubes, pressure drums, and bundles of cylinders conforming to packing instruction P200 and to the construction requirements of Chapter 6.2 are authorized for the carriage of any liquid or solid substance assigned to packing instructions P001 or P002 unless otherwise indicated in the packing instruction or by a special provision in Column (9a) of Table A of Chapter 3.2. The capacity of tubes and bundles of cylinders shall not exceed 1000 litres

4.1.3.7 Packagings or IBCs not specifically authorized in the applicable packing instruction shall not be used for the carriage of a substance or article unless specifically allowed under a temporary derogation agreed between Contracting Parties in accordance with 1.5.1.

4.1.3.8 ***Unpackaged articles other than Class 1 articles***

4.1.3.8.1 Where large and robust articles cannot be packaged in accordance with the requirements of Chapters 6.1 or 6.6 and they have to be carried empty, uncleaned and unpackaged, the competent authority of the country of origin[2] may approve such carriage. In doing so the competent authority shall take into account that:

(a) Large and robust articles shall be strong enough to withstand the shocks and loadings normally encountered during carriage including trans-shipment between transport units and between transport units and warehouses, as well as any removal from a pallet for subsequent manual or mechanical handling;

(b) All closures and openings shall be sealed so that there can be no loss of contents which might be caused under normal conditions of carriage, by vibration, or by changes in temperature, humidity or pressure (resulting from altitude, for example). No dangerous residue shall adhere to the outside of the large and robust articles;

(c) Parts of large and robust articles, which are in direct contact with dangerous goods:

(i) shall not be affected or significantly weakened by those dangerous goods; and

(ii) shall not cause a dangerous effect e.g. catalysing a reaction or reacting with the dangerous goods;

(d) Large and robust articles containing liquids shall be stowed and secured to ensure that neither leakage nor permanent distortion of the article occurs during carriage;

(e) They shall be fixed in cradles or crates or other handling devices or to the transport unit or container in such a way that they will not become loose during normal conditions of carriage.

---

[2] *If the country of origin is not a contracting party to ADR, the competent authority of the first country contracting party to the ADR reached by the consignment.*

4.1.3.8.2 Unpackaged articles approved by the competent authority in accordance with the provisions of 4.1.3.8.1 shall be subject to the consignment procedures of Part 5. In addition the consignor of such articles shall ensure that a copy of any such approval is attached to the transport document.

NOTE: *A large and robust article may include flexible fuel containment systems, military equipment, machinery or equipment containing dangerous goods above the limited quantities according to 3.4.6.*

4.1.4 List of packing instructions

NOTE*: Although the following packing instructions use the same numbering system as used in the IMDG Code and the UN Model Regulations, readers should be aware that some of the details may be different in the case of ADR.*

4.1.4.1 ***Packing instructions concerning the use of packagings (except IBCs and large packagings)***

P001	**PACKING INSTRUCTION (LIQUIDS)**			**P001**
The following packagings are authorized provided the general provisions of **4.1.1** and **4.1.3** are met:				
Combination packagings:		**Maximum capacity/Net mass (see 4.1.3.3.)**		
Inner packagings	**Outer packagings**	**Packing group I**	**Packing group II**	**Packing group III**
	Drums			
Glass 10 *l*	steel (1A2)	250 kg	400 kg	400 kg
Plastics 30 *l*	aluminium (1B2)	250 kg	400 kg	400 kg
Metal 40 *l*	metal other than steel or aluminium (1N2)	250 kg	400 kg	400 kg
	plastics (1H2)	250 kg	400 kg	400 kg
	plywood (1D)	150 kg	400 kg	400 kg
	fibre (1G)	75 kg	400 kg	400 kg
	Boxes			
	steel (4A)	250 kg	400 kg	400 kg
	aluminium (4B)	250 kg	400 kg	400 kg
	natural wood (4C1, 4C2)	150 kg	400 kg	400 kg
	plywood (4D)	150 kg	400 kg	400 kg
	reconstituted wood (4F)	75 kg	400 kg	400 kg
	fibreboard (4G)	75 kg	400 kg	400 kg
	expanded plastics (4H1)	60 kg	60 kg	60 kg
	solid plastics (4H2)	150 kg	400 kg	400 kg
	Jerricans			
	steel (3A2)	120 kg	120 kg	120 kg
	aluminium (3B2)	120 kg	120 kg	120 kg
	plastics (3H2)	120 kg	120 kg	120 kg
Single packagings:				
Drums				
steel, non-removable head (1A1)		250 *l*	450 *l*	450 *l*
steel, removable head (1A2)		250 *l* [a]	450 *l*	450 *l*
aluminium, non-removable head (1B1)		250 *l*	450 *l*	450 *l*
aluminium, removable head (1B2)		250 *l* [a]	450 *l*	450 *l*
metal other than steel or aluminium, non-removable head (1N1)		250 *l*	450 *l*	450 *l*
metal other than steel or aluminium, removable head (1N2)		250 *l* [a]	450 *l*	450 *l*
plastics, non-removable head (1H1)		250 *l*	450 *l*	450 *l*
plastics, removable head (1H2)		250 *l* [a]	450 *l*	450 *l*
Jerricans				
steel, non-removable head (3A1)		60 *l*	60 *l*	60 *l*
steel, removable head (3A2)		60 *l* [a]	60 *l*	60 *l*
aluminium, non-removable head (3B1)		60 *l*	60 *l*	60 *l*
aluminium, removable head (3B2)		60 *l* [a]	60 *l*	60 *l*
plastics, non-removable head (3H1)		60 *l*	60 *l*	60 *l*
plastics, removable head (3H2)		60 *l* [a]	60 *l*	60 *l*

[a] *Only substances with a viscosity of more than 2 680 mm^2/s are authorized.*

Single packagings *(cont'd)*	**Maximum capacity/Net mass (see 4.1.3.3.)**		
Composite packagings	**Packing group I**	**Packing group II**	**Packing group III**
plastics receptacle with outer steel or aluminium drum (6HA1, 6HB1)	250 *l*	250 *l*	250 *l*
plastics receptacle with outer fibre, plastics or plywood drum (6HG1, 6HH1, 6HD1)	120 *l*	250 *l*	250 *l*
plastics receptacle with outer steel or aluminium crate or box or plastics receptacle with outer wooden, plywood, fibreboard or solid plastics box (6HA2, 6HB2, 6HC, 6HD2, 6HG2 or 6HH2)	60 *l*	60 *l*	60 *l*
glass receptacle with outer steel, aluminium, fibreboard, plywood, solid plastics or expanded plastics drum (6PA1, 6PB1, 6PG1, 6PD1, 6PH1 or 6PH2) or with outer steel or aluminium crate or box or with outer wooden or fibreboard box or with outer wickerwork hamper (6PA2, 6PB2, 6PC, 6PG2 or 6PD2)	60 *l*	60 *l*	60 *l*

Additional requirement:
For substances of Class 3, packing group III, which give off small quantities of carbon dioxide or nitrogen, the packagings shall be vented.

Special packing provisions:

PP1 For UN Nos. 1133, 1210, 1263 and 1866, substances of packing groups II and III may be carried in quantities of 5 litres or less per packaging in metal or plastics packagings which are not required to meet the performance tests of Chapter 6.1, provided that such packagings are carried:

(a) in palletized loads, a pallet box or unit load device, e.g. individual packagings placed or stacked and secured by strapping, shrink or stretch-wrapping or other suitable means to a pallet; or

(b) as inner packagings of combination packagings with a maximum net mass of 40 kg.

PP2 For UN Nos. 3065 and 1170, wooden barrels (2C1 and 2C2) may be used.

PP4 For UN No. 1774, packagings shall meet the packing group II performance level.

PP5 For UN No. 1204, packagings shall be so constructed that explosion is not possible by reason of increased internal pressure. Cylinders, tubes and pressure drums shall not be used for these substances.

PP6 For UN Nos. 1851 and 3248, the maximum net quantity per package shall be 5 l.

PP10 For UN No. 1791, packing group II, the packaging shall be vented.

PP31 For UN No. 1131, packagings shall be hermetically sealed.

PP33 For UN No. 1308, packing groups I and II, only combination packagings with a maximum gross mass of 75 kg allowed.

PP81 For UN No. 1790 with more than 60% but not more than 85% hydrofluoric acid and UN No. 2031 with more than 55% nitric acid, the permitted use of plastics drums and jerricans as single packagings shall be two years from their date of manufacture.

Special packing provisions specific to RID and ADR:

RR2 For UN No. 1261, removable head packagings are not permitted.

P002	PACKING INSTRUCTION (SOLIDS)			P002
The following packagings are authorized provided the general provisions of **4.1.1** and **4.1.3** are met:				
Combination packagings:		**Maximum net mass (see 4.1.3.3)**		
Inner packagings	**Outer packagings**	**Packing group I**	**Packing group II**	**Packing group III**
Glass 10 kg Plastics [a] 50 kg Metal 50 kg Paper [a, b, c] 50 kg Fibre [a, b, c] 50 kg [a] *These inner packagings shall be sift-proof.* [b] *These inner packagings shall not be used when the substances being carried may become liquid during carriage (see 4.1.3.4).* [c] *These inner packagings shall not be used for substances of packing group I.*	**Drums**			
	steel (1A2)	400 kg	400 kg	400 kg
	aluminium (1B2)	400 kg	400 kg	400 kg
	metal, other than steel or aluminium (1N2)	400 kg	400 kg	400 kg
	plastics (1H2)	400 kg	400 kg	400 kg
	plywood (1D)	400 kg	400 kg	400 kg
	fibre (1G)	400 kg	400 kg	400 kg
	Boxes			
	steel (4A)	400 kg	400 kg	400 kg
	aluminium (4B)	400 kg	400 kg	400 kg
	natural wood (4C1)	250 kg	400 kg	400 kg
	natural wood with sift proof walls (4C2)	250 kg	400 kg	400 kg
	plywood (4D)	250 kg	400 kg	400 kg
	reconstituted wood (4F)	125 kg	400 kg	400 kg
	fibreboard (4G)	125 kg	400 kg	400 kg
	expanded plastics (4H1)	60 kg	60 kg	60 kg
	solid plastics (4H2)	250 kg	400 kg	400 kg
	Jerricans			
	steel (3A2)	120 kg	120 kg	120 kg
	aluminium (3B2)	120 kg	120 kg	120 kg
	plastics (3H2)	120 kg	120 kg	120 kg
Single packagings:				
Drums				
steel (1A1 or 1A2 [d])		400 kg	400 kg	400 kg
aluminium (1B1 or 1B2 [d])		400 kg	400 kg	400 kg
metal, other than steel or aluminium (1N1 or 1N2 [d])		400 kg	400 kg	400 kg
plastics (1H1 or 1H2 [d])		400 kg	400 kg	400 kg
fibre (1G) [e]		400 kg	400 kg	400 kg
plywood (1D) [e]		400 kg	400 kg	400 kg
Jerricans				
steel (3A1 or 3A2 [d])		120 kg	120 kg	120 kg
aluminium (3B1 or 3B2 [d])		120 kg	120 kg	120 kg
plastics (3H1 or 3H2 [d])		120 kg	120 kg	120 kg

[d] *These packagings shall not be used for substances of packing group I that may become liquid during carriage (see 4.1.3.4).*

[e] *These packagings shall not be used when substances being carried may become liquid during carriage (see 4.1.3.4).*

P002	PACKING INSTRUCTION (SOLIDS) *(cont'd)*		P002
	Maximum net mass (see 4.1.3.3.)		
Single packagings *(cont'd)*:	**Packing group I**	**Packing group II**	**Packing group III**
Boxes			
steel (4A) [e]	Not allowed	400 kg	400 kg
aluminium (4B) [e]	Not allowed	400 kg	400 kg
natural wood (4C1) [e]	Not allowed	400 kg	400 kg
plywood (4D) [e]	Not allowed	400 kg	400 kg
reconstituted wood (4F) [e]	Not allowed	400 kg	400 kg
natural wood with sift-proof walls (4C2) [e]	Not allowed	400 kg	400 kg
fibreboard (4G) [e]	Not allowed	400 kg	400 kg
solid plastics (4H2) [e]	Not allowed	400 kg	400 kg
Bags			
bags (5H3, 5H4, 5L3, 5M2) [e]	Not allowed	50 kg	50 kg
Composite packagings			
plastics receptacle with outer steel, aluminium, plywood, fibre or plastics drum (6HA1, 6HB1, 6HG1 [e], 6HD1 [e], or 6HH1)	400 kg	400 kg	400 kg
plastics receptacle with outer steel or aluminium crate or box, wooden box, plywood box, fibreboard box or solid plastics box (6HA2, 6HB2, 6HC, 6HD2 [e], 6HG2 [e] or 6HH2)	75 kg	75 kg	75 kg
glass receptacle with outer steel, aluminium plywood or fibre drum (6PA1, 6PB1, 6PD1 [e] or 6PG1 [e]) or with outer steel or aluminium crate or box or with outer wooden, or fibreboard box or with outer wickerwork hamper (6PA2, 6PB2, 6PC, 6PD2 [e], or 6PG2[e]) or with outer solid plastics or expanded plastics packaging (6PH2 or 6PH1 [e])	75 kg	75 kg	75 kg

[e] *These packagings shall not be used when the substances being carried may become liquid during carriage (see 4.1.3.4).*

(Cont'd on next page)

Special packing provisions:

PP6 For UN No. 3249, the maximum net mass per package shall be 5 kg.

PP7 For UN No. 2000, celluloid may also be transported unpacked on pallets, wrapped in plastic film and secured by appropriate means, such as steel bands as a full load in closed vehicles or containers. Each pallet shall not exceed 1000 kg.

PP8 For UN No. 2002, packagings shall be so constructed that explosion is not possible by reason of increased internal pressure. Cylinders, tubes and pressure drums shall not be used for these substances.

PP9 For UN Nos. 3175, 3243 and 3244, packagings shall conform to a design type that has passed a leakproofness test at the packing group II performance level. For UN No. 3175, the leakproofness test is not required when the liquids are fully absorbed in solid material contained in sealed bags.

PP11 For UN No. 1309, packing group III, and UN No. 1362, 5H1, 5L1 and 5M1 bags are allowed if they are overpacked in plastic bags and are wrapped in shrink or stretch wrap on pallets.

PP12 For UN Nos. 1361, 2213 and UN No. 3077, 5H1, 5L1 and 5M1 bags are allowed when carried in closed vehicles or containers.

PP13 For articles classified under UN No. 2870, only combination packagings meeting the packing group I performance level are authorized.

PP14 For UN Nos. 2211, 2698 and 3314, packagings are not required to meet the performance tests in Chapter 6.1.

PP15 For UN Nos. 1324 and 2623, packagings shall meet the packing group III performance level.

PP20 For UN No. 2217, any sift-proof, tearproof receptacle may be used.

PP30 For UN No. 2471, paper or fibre inner packagings are not permitted.

PP34 For UN No. 2969 (as whole beans), 5H1, 5L1 and 5M1 bags are permitted.

PP37 For UN Nos. 2590 and 2212, 5M1 bags are permitted. Packages shall be carried in closed vehicles or containers or as stretch or shrink-wrapped unit loads.

PP38 For UN No. 1309, packing group II, bags are permitted only in closed vehicles or containers.

PP84 For UN No. 1057, rigid outer packagings meeting the packing group II performance level shall be used. The packagings shall be designed and constructed and arranged to prevent movement, inadvertent ignition of the devices or inadvertent release of flammable gas or liquid.

Special packing provision specific to RID and ADR:

RR5 Notwithstanding special packing provision PP84, only the general provisions of 4.1.1.1, 4.1.1.2 and 4.1.1.5 to 4.1.1.7 need be complied with if the gross mass of the package is not more than 10 kg.

P003	PACKING INSTRUCTION	P003
Dangerous goods shall be placed in suitable outer packagings. The packagings shall meet the provisions of **4.1.1.1, 4.1.1.2, 4.1.1.4, 4.1.1.8** and **4.1.3** and be so designed that they meet the construction requirements of 6.1.4. Outer packagings constructed of suitable material of adequate strength and design in relation to the packaging capacity and its intended use shall be used. Where this packing instruction is used for the transport of articles or inner packagings of combination packagings, the packaging shall be designed and constructed to prevent inadvertent discharge of articles during normal conditions of carriage.		
Special packing provisions: **PP16** For UN No. 2800, batteries shall be protected from short circuits and shall be securely packed in strong outer packagings. ***NOTE 1****: Non-spillable batteries which are an integral part of, and necessary for, the operation of mechanical or electronic equipment shall be securely fastened in the battery holder on the equipment and protected in such a manner as to prevent damage and short circuits.* ***NOTE 2:*** *For used batteries (UN No. 2800), see P801a.* **PP19** For UN Nos. 1364 and 1365, carriage as bales is authorized. **PP20** For UN Nos. 1363, 1386, 1408 and 2793 any sift-proof, tearproof receptacle may be used. **PP32** UN Nos. 2857 and 3358 may be carried unpackaged, in crates or in appropriate overpacks.		

P099	PACKING INSTRUCTION	P099
Only packagings which are approved by the competent authority may be used.		

P101	PACKING INSTRUCTION	P101
Only packagings which are approved by the competent authority of the country of origin may be used. If the country of origin is not a Contracting Party to the ADR, the packaging shall be approved by the competent authority of the first country Contracting Party to ADR reached by the consignment. The State's distinguishing sign for motor vehicles in international traffic of the country for which the authority acts, shall be marked on the transport documents as follows: "**Packaging approved by the competent authority of...**" (see 5.4.1.2.1 (e))		

P110(a)	PACKING INSTRUCTION	P110(a)
(RESERVED) ***NOTE:*** *This packing instruction in the UN Model Regulations is not admitted for carriage under ADR.*		

P110(b)	PACKING INSTRUCTION	P110(b)
The following packagings are authorized, provided the general packing provisions of **4.1.1**, **4.1.3** and special packing provisions of **4.1.5** are met:		
Inner packagings and arrangements **Receptacles** metal wood rubber, conductive plastics, conductive **Bags** rubber, conductive plastics, conductive	**Intermediate packagings and arrangements** **Dividing partitions** metal wood plastics fibreboard	**Outer packagings and arrangements** **Boxes** natural wood, sift-proof wall (4C2) plywood (4D) reconstituted wood (4F)
Special packing provision: **PP42** For UN Nos. 0074, 0113, 0114, 0129, 0130, 0135 and 0224, the following conditions shall be met: (a) Inner packagings shall not contain more than 50 g of explosive substance (quantity corresponding to dry substance); (b) Compartments between dividing partitions shall not contain more than one inner packaging, firmly fitted; and (c) The outer packaging may be partitioned into up to 25 compartments.		

P111	PACKING INSTRUCTION	P111
The following packagings are authorized, provided the general packing provisions of **4.1.1, 4.1.3** and special packing provisions of **4.1.5** are met:		
Inner packagings and arrangements **Bags** paper, waterproofed plastics textile, rubberized **Sheets** plastics textile, rubberized	**Intermediate packagings and arrangements** Not necessary	**Outer packagings and arrangements** **Boxes** steel (4A) aluminium (4B) natural wood, ordinary (4C1) natural wood, sift-proof (4C2) plywood (4D) reconstituted wood (4F) fibreboard (4G) plastics, expanded (4H1) plastics, solid (4H2) **Drums** steel, removable head (1A2) aluminium, removable head (1B2) plywood (1D) fibreboard (1G) plastics, removable head (1H2)
Special packing provision: **PP43** For UN No. 0159, inner packagings are not required when metal (1A2 or 1B2) or plastics (1H2) drums are used as outer packagings.		

P112(a)	PACKING INSTRUCTION (Solid wetted, 1.1D)	P112(a)
The following packagings are authorized, provided the general packing provisions of **4.1.1, 4.1.3** and special packing provisions of **4.1.5** are met:		
Inner packagings and arrangements **Bags** paper, multiwall, water resistant plastics textile textile, rubberized woven plastics **Receptacles** metal plastics	**Intermediate packagings and arrangements** **Bags** plastics textile, plastic coated or lined **Receptacles** metal plastics	**Outer packagings and arrangements** **Boxes** steel (4A) aluminium (4B) natural wood, ordinary (4C1) natural wood, sift-proof (4C2) plywood (4D) reconstituted wood (4F) fibreboard (4G) plastics, expanded (4H1) plastics, solid (4H2) **Drums** steel, removable head (1A2) aluminium, removable head (1B2) plywood (1D) fibre (1G) plastics, removable head (1H2)
Additional requirement: Intermediate packagings are not required if leakproof removable head drums are used as the outer packaging.		
Special packing provisions: **PP26** For UN Nos. 0004, 0076, 0078, 0154, 0219 and 0394, packagings shall be lead free. **PP45** For UN Nos. 0072 and 0226, intermediate packagings are not required.		

P112(b)	PACKING INSTRUCTION (Solid dry, other than powder 1.1D)	P112(b)
The following packagings are authorized, provided the general packing provisions of **4.1.1, 4.1.3** and special packing provisions of **4.1.5** are met:		
Inner packagings and arrangements **Bags** paper, kraft paper, multiwall, water resistant plastics textile textile, rubberized woven plastics	**Intermediate packagings and arrangements** **Bags** (for UN No. 0150 only) plastics textile, plastic coated or lined	**Outer packagings and arrangements** **Bags** woven plastics, sift-proof (5H2) woven plastics, water-resistant (5H3) plastics, film (5H4) textile, sift-proof (5L2) textile, water resistant (5L3) paper, multiwall, water resistant (5M2) **Boxes** steel (4A) aluminium (4B) natural wood, ordinary (4C1) natural wood, sift-proof (4C2) plywood (4D) reconstituted wood (4F) fibreboard (4G) plastics, expanded (4H1) plastics, solid (4H2) **Drums** steel, removable head (1A2) aluminium, removable head (1B2) plywood (1D) fibre (1G) plastics, removable head (1H2)
Special packing provisions: **PP26** For UN Nos. 0004, 0076, 0078, 0154, 0216, 0219 and 0386, packagings shall be lead free. **PP46** For UN Nos. 0209, bags, sift-proof (5H2) are recommended for flake or prilled TNT in the dry state and a maximum net mass of 30 kg. **PP47** For UN No. 0222, inner packagings are not required when the outer packaging is a bag.		

P112(c)	PACKING INSTRUCTION (Solid dry powder 1.1D)	P112(c)

The following packagings are authorized, provided the general packing provisions of **4.1.1, 4.1.3** and special packing provisions of **4.1.5** are met:

Inner packagings and arrangements	Intermediate packagings and arrangements	Outer packagings and arrangements
Bags paper, multiwall, water resistant plastics woven plastics **Receptacles** fibreboard metal plastics wood	**Bags** paper, multiwall, water resistant with inner lining plastics **Receptacles** metal plastics	**Boxes** steel (4A) aluminium (4B) natural wood, ordinary (4C1) natural wood, sift-proof (4C2) plywood (4D) reconstituted wood (4F) fibreboard (4G) plastics, solid (4H2) **Drums** steel, removable head (1A2) aluminium, removable head (1B2) plywood (1D) fibre (1G) plastics, removable head (1H2)

Additional requirements:

1. Inner packagings are not required if drums are used as the outer packaging.

2. The packaging shall be sift-proof.

Special packing provisions:

PP26 For UN Nos. 0004, 0076, 0078, 0154, 0216, 0219 and 0386, packagings shall be lead free.

PP46 For UN No. 0209, bags, sift-proof (5H2) are recommended for flake or prilled TNT in the dry state and a maximum net mass of 30 kg.

PP48 For UN No. 0504, metal packagings shall not be used.

P113	PACKING INSTRUCTION	P113
The following packagings are authorized, provided the general packing provisions of **4.1.1, 4.1.3** and special packing provisions of **4.1.5** are met:		
Inner packagings and arrangements **Bags** paper plastics textile, rubberized **Receptacles** fibreboard metal plastics wood	**Intermediate packagings and arrangements** Not necessary	**Outer packagings and arrangements** **Boxes** steel (4A) aluminium (4B) natural wood, ordinary (4C1) natural wood, sift-proof walls (4C2) plywood (4D) reconstituted wood (4F) fibreboard (4G) plastics, solid (4H2) **Drums** steel, removable head (1A2) aluminium, removable head (1B2) plywood (1D) fibre (1G) plastics, removable head (1H2)
Additional requirement: The packaging shall be sift-proof.		
Special packing provisions: **PP49** For UN Nos. 0094 and 0305, no more than 50 g of substance shall be packed in an inner packaging. **PP50** For UN No. 0027, inner packagings are not necessary when drums are used as outer packagings. **PP51** For UN No. 0028, paper kraft or waxed paper sheets may be used as inner packagings.		

P114(a)	PACKING INSTRUCTION (Solid wetted)	P114(a)
The following packagings are authorized, provided the general packing provisions of **4.1.1, 4.1.3** and special packing provisions of **4.1.5** are met:		
Inner packagings and arrangements **Bags** plastics textile woven plastics **Receptacles** metal plastics	**Intermediate packagings and arrangements** **Bags** plastics textile, plastic coated or lined **Receptacles** metal plastics	**Outer packagings and arrangements** **Boxes** steel (4A) natural wood, ordinary (4C1) natural wood, sift-proof walls (4C2) plywood (4D) reconstituted wood (4F) fibreboard (4G) plastics, solid (4H2) **Drums** steel, removable head (1A2) aluminium, removable head (1B2) plywood (1D) fibre (1G) plastics, removable head (1H2)
Additional requirement: Intermediate packagings are not required if leakproof removable head drums are used as outer packagings.		
Special packing provisions: **PP26** For UN Nos. 0077, 0132, 0234, 0235 and 0236, packagings shall be lead free. **PP43** For UN No. 0342, inner packagings are not required when metal (1A2 or 1B2) or plastics (1H2) drums are used as outer packagings.		

P114(b)	PACKING INSTRUCTION (Solid dry)	P114(b)
The following packagings are authorized, provided the general packing provisions of **4.1.1, 4.1.3** and special packing provisions of **4.1.5** are met:		
Inner packagings and arrangements	**Intermediate packagings and arrangements**	**Outer packagings and arrangements**
Bags paper, kraft plastics textile, sift-proof woven plastics, sift-proof **Receptacles** fibreboard metal paper plastics woven plastics, sift-proof	Not necessary	**Boxes** natural wood, ordinary (4C1) natural wood, sift-proof walls (4C2) plywood (4D) reconstituted wood (4F) fibreboard (4G) **Drums** steel, removable head (1A2) aluminium, removable head (1B2) plywood (1D) fibre (1G) plastics, removable head (1H2)
Special packing provisions: **PP26** For UN Nos. 0077, 0132, 0234, 0235 and 0236, packagings shall be lead free. **PP50** For UN Nos. 0160 and 0161, inner packagings are not required if drums are used as outer packagings. **PP52** For UN Nos. 0160 and 0161, when metal drums (1A2 or 1B2) are used as outer packagings, metal packagings shall be so constructed that the risk of explosion, by reason of increased internal pressure from internal or external causes is prevented.		

P115	PACKING INSTRUCTION	P115

The following packagings are authorized, provided the general packing provisions of **4.1.1, 4.1.3** and special packing provisions of **4.1.5** are met:

Inner packagings and arrangements	Intermediate packagings and arrangements	Outer packagings and arrangements
Receptacles plastics	**Bags** plastics in metal receptacles **Drums** metal	**Boxes** natural wood, ordinary (4C1) natural wood, sift-proof walls (4C2) plywood (4D) reconstituted wood (4F) **Drums** steel, removable head (1A2) aluminium, removable head (1B2) plywood (1D) fibre (1G) plastics, removable head (1H2)

Special packing provisions:

PP45 For UN No. 0144, intermediate packagings are not required.

PP53 For UN Nos. 0075, 0143, 0495 and 0497, when boxes are used as outer packagings, inner packagings shall have taped screw cap closures and be not more than 5 litres capacity each. Inner packagings shall be surrounded with non-combustible absorbent cushioning materials. The amount of absorbent cushioning material shall be sufficient to absorb the liquid contents. Metal receptacles shall be cushioned from each other. Net mass of propellant is limited to 30 kg for each package when outer packagings are boxes.

PP54 For UN Nos. 0075, 0143, 0495 and 0497, when drums are used as outer packagings and when intermediate packagings are drums, they shall be surrounded with non-combustible cushioning material in a quantity sufficient to absorb the liquid contents. A composite packaging consisting of a plastics receptacle in a metal drum may be used instead of the inner and intermediate packagings. The net volume of propellant in each package shall not exceed 120 litres.

PP55 For UN No. 0144, absorbent cushioning material shall be inserted.

PP56 For UN No. 0144, metal receptacles may be used as inner packagings.

PP57 For UN Nos. 0075, 0143, 0495 and 0497, bags shall be used as intermediate packagings when boxes are used as outer packagings.

PP58 For UN Nos. 0075, 0143, 0495 and 0497, drums shall be used as intermediate packagings when drums are used as outer packagings.

PP59 For UN No. 0144, fibreboard boxes (4G) may be used as outer packagings.

PP60 For UN No. 0144, aluminium drums, removable head (1B2) shall not be used.

P116	PACKING INSTRUCTION	P116

The following packagings are authorized, provided the general packing provisions of **4.1.1, 4.1.3** and special packing provisions of **4.1.5** are met:

Inner packagings and arrangements	Intermediate packagings and arrangements	Outer packagings and arrangements
Bags paper, water and oil resistant plastics textile, plastic coated or lined woven plastics, sift-proof **Receptacles** fibreboard, water resistant metal plastics wood, sift-proof **Sheets** paper, water resistant paper, waxed plastics	Not necessary	**Bags** woven plastics (5H1) paper, multiwall, water resistant (5M2) plastics, film (5H4) textile, sift-proof (5L2) textile, water resistant (5L3) **Boxes** steel (4A) aluminium (4B) natural wood, ordinary (4C1) natural wood, sift-proof walls (4C2) plywood (4D) reconstituted wood (4F) fibreboard (4G) plastics, solid (4H2) **Drums** steel, removable head (1A2) aluminium, removable head (1B2) plywood (1D) fibre (1G) plastics, removable head (1H2) **Jerricans** steel, removable head (3A2) plastics, removable head (3H2)

Special packing provisions:

PP61 For UN Nos. 0082, 0241, 0331 and 0332, inner packagings are not required if leakproof removable head drums are used as outer packagings.

PP62 For UN Nos. 0082, 0241, 0331 and 0332, inner packagings are not required when the explosive is contained in a material impervious to liquid.

PP63 For UN No. 0081, inner packagings are not required when contained in rigid plastic which is impervious to nitric esters.

PP64 For UN No. 0331, inner packagings are not required when bags (5H2), (5H3) or (5H4) are used as outer packagings.

PP65 For UN Nos. 0082, 0241, 0331 and 0332, bags (5H2 or 5H3) may be used as outer packagings.

PP66 For UN No. 0081, bags shall not be used as outer packagings.

P130	PACKING INSTRUCTION	P130
The following packagings are authorized, provided the general packing provisions of **4.1.1, 4.1.3** and special packing provisions of **4.1.5** are met:		
Inner packagings and arrangements	**Intermediate packagings and arrangements**	**Outer packagings and arrangements**
Not necessary	Not necessary	**Boxes** steel (4A) aluminium (4B) natural wood, ordinary (4C1) natural wood, sift-proof walls (4C2) plywood (4D) reconstituted wood (4F) fibreboard (4G) plastics, expanded (4H1) plastics, solid (4H2) **Drums** steel, removable head (1A2) aluminium, removable head (1B2) plywood (1D) fibre (1G) plastics, removable head (1H2)
Special packing provision: **PP67** The following applies to UN Nos. 0006, 0009, 0010, 0015, 0016, 0018, 0019, 0034, 0035, 0038, 0039, 0048, 0056, 0137, 0138, 0168, 0169, 0171, 0181, 0182, 0183, 0186, 0221, 0243, 0244, 0245, 0246, 0254, 0280, 0281, 0286, 0287, 0297, 0299, 0300, 0301, 0303, 0321, 0328, 0329, 0344, 0345, 0346, 0347, 0362, 0363, 0370, 0412, 0424, 0425, 0434, 0435, 0436, 0437, 0438, 0451, 0488 and 0502: Large and robust explosives articles, normally intended for military use, without their means of initiation or with their means of initiation containing at least two effective protective features, may be carried unpackaged. When such articles have propelling charges or are self-propelled, their ignition systems shall be protected against stimuli encountered during normal conditions of carriage. A negative result in Test Series 4 on an unpackaged article indicates that the article can be considered for carriage unpackaged. Such unpackaged articles may be fixed to cradles or contained in crates or other suitable handling devices.		

P131	PACKING INSTRUCTION	P131
The following packagings are authorized, provided the general packing provisions of **4.1.1, 4.1.3** and special packing provisions of **4.1.5** are met:		
Inner packagings and arrangements **Bags** paper plastics **Receptacles** fibreboard metal plastics wood **Reels**	**Intermediate packagings and arrangements** Not necessary	**Outer packagings and arrangements** **Boxes** steel (4A) aluminium (4B) natural wood, ordinary (4C1) natural wood, sift-proof walls (4C2) plywood (4D) reconstituted wood (4F) fibreboard (4G) **Drums** steel, removable head (1A2) aluminium, removable head (1B2) plywood (1D) fibre (1G) plastics, removable head (1H2)
Special packing provision: **PP68** For UN Nos. 0029, 0267 and 0455, bags and reels shall not be used as inner packagings.		

P132(a)	PACKING INSTRUCTION	P132(a)
(Articles consisting of closed metal, plastics or fibreboard casings that contain a detonating explosive, or consisting of plastics-bonded detonating explosives)		
The following packagings are authorized, provided the general packing provisions of **4.1.1, 4.1.3** and special packing provisions of **4.1.5** are met:		
Inner packagings and arrangements Not necessary	**Intermediate packagings and arrangements** Not necessary	**Outer packagings and arrangements** **Boxes** steel (4A) aluminium (4B) wood, natural, ordinary (4C1) wood, natural, sift-proof walls (4C2) plywood (4D) reconstituted wood (4F) fibreboard (4G) plastics, solid (4H2)

P132(b)	PACKING INSTRUCTION (Articles without closed casings)	P132(b)
The following packagings are authorized, provided the general packing provisions of **4.1.1, 4.1.3** and special packing provisions of **4.1.5** are met:		
Inner packagings and arrangements **Receptacles** fibreboard metal plastics **Sheets** paper plastics	**Intermediate packagings and arrangements** Not necessary	**Outer packagings and arrangements** **Boxes** steel (4A) aluminium (4B) natural wood, ordinary (4C1) natural wood, sift-proof walls (4C2) plywood (4D) reconstituted wood (4F) fibreboard (4G) plastics, solid (4H2)

P133	PACKING INSTRUCTION	P133
The following packagings are authorized, provided the general packing provisions of **4.1.1, 4.1.3** and special packing provisions of **4.1.5** are met:		
Inner packagings and arrangements **Receptacles** fibreboard metal plastics wood **Trays, fitted with dividing partitions** fibreboard plastics wood	**Intermediate packagings and arrangements** **Receptacles** fibreboard metal plastics wood	**Outer packagings and arrangements** **Boxes** steel (4A) aluminium (4B) natural wood, ordinary (4C1) natural wood, sift-proof walls (4C2) plywood (4D) reconstituted wood (4F) fibreboard (4G) plastics, solid (4H2)
Additional requirement: Receptacles are only required as intermediate packagings when the inner packagings are trays.		
Special packing provision: **PP69** For UN Nos. 0043, 0212, 0225, 0268 and 0306, trays shall not be used as inner packagings.		

P134	PACKING INSTRUCTION	P134
The following packagings are authorized, provided the general packing provisions **of 4.1.1, 4.1.3** and special packing provisions of **4.1.5** are met:		
Inner packagings and arrangements	**Intermediate packagings and arrangements**	**Outer packagings and arrangements**
Bags water resistant **Receptacles** fibreboard metal plastics wood **Sheets** fibreboard, corrugated **Tubes** fibreboard	Not necessary	**Boxes** steel (4A) aluminium (4B) natural wood, ordinary (4C1) natural wood, sift-proof walls (4C2) plywood (4D) reconstituted wood (4F) fibreboard (4G) plastics, expanded (4H1) plastics, solid (4H2) **Drums** steel, removable head (1A2) aluminium, removable head (1B2) plywood (1D) fibre (1G) plastics, removable head (1H2)

P135	PACKING INSTRUCTION	P135
The following packagings are authorized, provided the general packing provisions of **4.1.1, 4.1.3** and special packing provisions of **4.1.5** are met:		
Inner packagings and arrangements	**Intermediate packagings and arrangements**	**Outer packagings and arrangements**
Bags paper plastics **Receptacles** fibreboard metal plastics wood **Sheets** paper plastics	Not necessary	**Boxes** steel (4A) aluminium (4B) natural wood, ordinary (4C1) natural wood, sift-proof walls (4C2) plywood (4D) reconstituted wood (4F) fibreboard (4G) plastics, expanded (4H1) plastics, solid (4H2) **Drums** steel, removable head (1A2) aluminium, removable head (1B2) plywood (1D) fibre (1G) plastics, removable head (1H2)

P136	PACKING INSTRUCTION	P136
The following packagings are authorized, provided the general packing provisions of **4.1.1, 4.1.3** and special packing provisions of **4.1.5** are met:		
Inner packagings and arrangements **Bags** plastics textile Boxes fibreboard plastics wood **Dividing partitions in the outer packagings**	**Intermediate packagings and arrangements** Not necessary	**Outer packagings and arrangements** **Boxes** steel (4A) aluminium (4B) natural wood, ordinary (4C1) natural wood, sift-proof walls (4C2) plywood (4D) reconstituted wood (4F) fibreboard (4G) plastics, solid (4H2) **Drums** steel, removable head (1A2) aluminium, removable head (1B2) plywood (1D) fibre (1G) plastics, removable head (1H2)

P137	PACKING INSTRUCTION	P137
The following packagings are authorized, provided the general packing provisions of **4.1.1, 4.1.3** and special packing provisions of **4.1.5** are met:		
Inner packagings and arrangements **Bags** plastics **Boxes** fibreboard **Tubes** fibreboard metal plastics **Dividing partitions in the outer packagings**	**Intermediate packagings and arrangements** Not necessary	**Outer packagings and arrangements** **Boxes** steel (4A) aluminium (4B) natural wood, ordinary (4C1) natural wood, sift-proof walls (4C2) plywood (4D) reconstituted wood (4F) fibreboard (4G) **Drums** steel, removable head (1A2) aluminium, removable head (1B2) plywood (1D) fibre (1G) plastics, removable head (1H2)
Special packing provision: **PP70** For UN Nos. 0059, 0439, 0440 and 0441, when the shaped charges are packed singly, the conical cavity shall face downwards and the package marked "THIS SIDE UP". When the shaped charges are packed in pairs, the conical cavities shall face inwards to minimize the jetting effect in the event of accidental initiation.		

P138	PACKING INSTRUCTION	P138
The following packagings are authorized, provided the general packing provisions of **4.1.1, 4.1.3** and special packing provisions of **4.1.5** are met:		
Inner packagings and arrangements	**Intermediate packagings and arrangements**	**Outer packagings and arrangements**
Bags plastics	Not necessary	**Boxes** steel (4A) aluminium (4B) natural wood, ordinary (4C1) natural wood, sift-proof walls (4C2) plywood (4D) reconstituted wood (4F) fibreboard (4G) plastics, solid (4H2) **Drums** steel, removable head (1A2) aluminium, removable head (1B2) plywood (1D) fibre (1G) plastics, removable head (1H2)
Additional requirement: If the ends of the articles are sealed, inner packagings are not necessary.		

P139	PACKING INSTRUCTION	P139
The following packagings are authorized, provided the general packing provisions of **4.1.1, 4.1.3** and special packing provisions of **4.1.5** are met:		
Inner packagings and arrangements **Bags** plastics **Receptacles** fibreboard metal plastics wood **Reels** **Sheets** paper plastics	**Intermediate packagings and arrangements** Not necessary	**Outer packagings and arrangements** **Boxes** steel (4A) aluminium (4B) natural wood, ordinary (4C1) natural wood, sift-proof walls (4C2) plywood (4D) reconstituted wood (4F) fibreboard (4G) plastics, solid (4H2) **Drums** steel, removable head (1A2) aluminium, removable head (1B2) plywood (1D) fibre (1G) plastics, removable head (1H2)
Special packing provisions: **PP71** For UN Nos. 0065, 0102, 0104, 0289 and 0290, the ends of the detonating cord shall be sealed, for example, by a plug firmly fixed so that the explosive cannot escape. The ends of flexible detonating cord shall be fastened securely. **PP72** For UN Nos. 0065 and 0289, inner packagings are not required when they are in coils.		

P140	PACKING INSTRUCTION	P140
The following packagings are authorized, provided the general packing provisions **of 4.1.1, 4.1.3** and special packing provisions of **4.1.5** are met:		
Inner packagings and arrangements	**Intermediate packagings and arrangements**	**Outer packagings and arrangements**
Bags plastics **Reels** **Sheets** paper, kraft plastics	Not necessary	**Boxes** steel (4A) aluminium (4B) natural wood, ordinary (4C1) natural wood, sift-proof walls (4C2) plywood (4D) reconstituted wood (4F) fibreboard (4G) plastics, solid (4H2) **Drums** steel, removable head (1A2) aluminium, removable head (1B2) plywood (1D) fibre (1G) plastics, removable head (1H2)
Special packing provisions: **PP73** For UN No. 0105, no inner packagings are required if the ends are sealed. **PP74** For UN No. 0101, the packaging shall be sift-proof except when the fuse is covered by a paper tube and both ends of the tube are covered with removable caps. **PP75** For UN No. 0101, steel or aluminium boxes or drums shall not be used.		

P141	PACKING INSTRUCTION	P141
The following packagings are authorized, provided the general packing provisions of **4.1.1, 4.1.3** and special packing provisions of **4.1.5** are met:		
Inner packagings and arrangements	**Intermediate packagings and arrangements**	**Outer packagings and arrangements**
Receptacles fibreboard metal plastics wood **Trays, fitted with dividing partitions** plastics wood **Dividing partitions in the outer packagings**	Not necessary	**Boxes** steel (4A) aluminium (4B) natural wood, ordinary (4C1) natural wood, sift-proof walls (4C2) plywood (4D) reconstituted wood (4F) fibreboard (4G) plastics, solid (4H2) **Drums** steel, removable head (1A2) aluminium, removable head (1B2) plywood (1D) fibre (1G) plastics, removable head (1H2)

P142	PACKING INSTRUCTION	P142
The following packagings are authorized, provided the general packing provisions **of 4.1.1, 4.1.3** and special packing provisions of **4.1.5** are met:		
Inner packagings and arrangements	**Intermediate packagings and arrangements**	**Outer packagings and arrangements**
Bags paper plastics **Receptacles** fibreboard metal plastics wood **Sheets** paper **Trays, fitted with dividing partitions** plastics	Not necessary	**Boxes** steel (4A) aluminium (4B) natural wood, ordinary (4C1) natural wood, sift-proof walls (4C2) plywood (4D) reconstituted wood (4F) fibreboard (4G) plastics, solid (4H2) **Drums** steel, removable head (1A2) aluminium, removable head (1B2) plywood (1D) fibre (1G) plastics, removable head (1H2)

P143	PACKING INSTRUCTION	P143
The following packagings are authorized, provided the general packing provisions of **4.1.1, 4.1.3** and special packing provisions of **4.1.5** are met:		
Inner packagings and arrangements	**Intermediate packagings and arrangements**	**Outer packagings and arrangements**
Bags paper, kraft plastics textile textile, rubberized **Receptacles** fibreboard metal plastics **Trays, fitted with dividing partitions** plastics wood	Not necessary	**Boxes** steel (4A) aluminium (4B) natural wood, ordinary (4C1) natural wood, sift-proof walls (4C2) plywood (4D) reconstituted wood (4F) fibreboard (4G) plastics, solid (4H2) **Drums** steel, removable head (1A2) aluminium, removable head (1B2) plywood (1D) fibre (1G) plastics, removable head (1H2)
Additional requirement: Instead of the above inner and outer packagings, composite packagings (6HH2) (plastics receptacle with outer solid plastics box) may be used.		
Special packing provision: **PP76** For UN Nos. 0271, 0272, 0415 and 0491, when metal packagings are used, metal packagings shall be so constructed that the risk of explosion, by reason of increase in internal pressure from internal or external causes is prevented.		

P144	PACKING INSTRUCTION	P144
The following packagings are authorized, provided the general packing provisions of **4.1.1, 4.1.3** and special packing provisions of **4.1.5** are met:		
Inner packagings and arrangements **Receptacles** fibreboard metal plastics **Dividing partitions in the outer packagings**	**Intermediate packagings and arrangements** Not necessary	**Outer packagings and arrangements** **Boxes** steel (4A) aluminium (4B) natural wood, ordinary with metal liner (4C1) plywood (4D) with metal liner reconstituted wood (4F) with metal liner plastics, expanded (4H1) plastics, solid (4H2) **Drums** steel, removable head (1A2) aluminium, removable head (1B2) plastics, removable head (1H2)
Special packing provision: **PP77** For UN Nos. 0248 and 0249, packagings shall be protected against the ingress of water. When water-activated contrivances are transported unpackaged, they shall be provided with at least two independent protective features which prevent the ingress of water.		

Type of packagings: Cylinders, tubes, pressure drums and bundles of cylinders

Cylinders, tubes, pressure drums and bundles of cylinders are authorised provided the special packing provisions of **4.1.6** and the provisions listed below under (1) to (11) are met.

General

(1) Pressure receptacles shall be so closed and leakproof as to prevent escape of the gases;

(2) Pressure receptacles containing toxic substances with an LC_{50} less than or equal to 200 ml/m^3 (ppm) as specified in the table shall not be equipped with any pressure relief device;

(3) The following three tables cover compressed gases (Table 1), liquefied and dissolved gases (Table 2) and substances not in Class 2 (Table 3). They provide:

(a) the UN number, name and description, and the classification code of the substance;

(b) the LC_{50} for toxic substances;

(c) the types of pressure receptacles authorised for the substance, shown by the letter "X";

(d) the maximum test period for periodic inspection of the pressure receptacles;

NOTE: *For pressure receptacles which make use of composite materials, the periodic inspection frequencies shall be as determined by the competent authority which approved the receptacles.*

(e) the minimum test pressure of the pressure receptacles;

(f) the maximum working pressure of the pressure receptacles for compressed gases or the maximum filling ratio(s) for liquefied and dissolved gases;

(g) special packing provisions that are specific to a substance.

Test pressure, filling ratios and filling requirements

(4) The minimum test pressure required for is 1 Mpa (10 bar);

(5) In no case shall pressure receptacles be filled in excess of the limit permitted in the following requirements:

(a) For compressed gases, the working pressure shall be not more than two thirds of the test pressure of the pressure receptacles. Restrictions to this upper limit on working pressure are imposed by special packing provision "o". In no case shall the internal pressure at 65 °C exceed the test pressure.

(b) For high pressure liquefied gases, the filling ratio shall be such that the settled pressure at 65 °C does not exceed the test pressure of the pressure receptacles.

The use of test pressures and filling ratios other than those in the table is permitted provided that the above criterion is met, except where special packing provision "o" applies.

For high pressure liquefied gases for which data is not provided in the table, the maximum filling ratio (FR) shall be determined as follows:

$$FR = 8.5 \times 10^{-4} \times d_g \times P_h$$

where FR = maximum filling ratio

d_g = gas density (at 15 °C, 1 bar)(in kg/m^3)

P_h = minimum test pressure (in bar).

If the density of the gas is unknown, the maximum filling ratio shall be determined as follows:

$$FR = \frac{P_h \times MM \times 10^{-3}}{R \times 338}$$

where FR = maximum filling ratio

P_h = minimum test pressure (in bar)

MM = molecular mass (in g/mol)

R = 8.31451×10^{-2} bar.l.mol^{-1}.K^{-1} (gas constant).

For gas mixtures, the average molecular mass is to be taken, taking into account the volumetric concentrations of the various components.

(c) For low pressure liquefied gases, the maximum mass of contents per litre of water capacity shall equal 0.95 times the density of the liquid phase at 50 °C; in addition, the liquid phase shall not fill the pressure receptacle at any temperature up to 60 °C. The test pressure of the pressure receptacle shall be at least equal to the vapour pressure (absolute) of the liquid at 65 °C, minus 100 kPa (1 bar).

For low pressure liquefied gases for which filling data is not provided in the table, the maximum filling ratio shall be determined as follows:

$$FR = (0.0032 \times BP - 0.24) \times d_l$$

where FR = maximum filling ratio

BP = boiling point (in Kelvin)

d_l = density of the liquid at boiling point (in kg/l).

(d) For UN No. 1001 acetylene, dissolved, and UN No. 3374 acetylene, solvent free, see (10), special packing provision "p".

(6) Other test pressure and filling ratio may be used provided they satisfy the general requirements outlined in paragraphs (4) and (5) above;

(7) The filling of pressure receptacles may only be carried out by specially-equipped centres, with qualified staff using appropriate procedures.
The procedures should include checks:

- of the conformity to regulations of receptacles and accessories;
- of their compatibility with the product to be carried;
- of the absence of damage which might affect safety;
- of compliance with the degree or pressure of filling, as appropriate;
- of regulation markings and identification.

Periodic inspections

(8) Refillable pressure receptacles shall be subjected to periodic inspections in accordance with the requirements of 6.2.1.6.

(9) If special provisions for certain substances do not appear in the tables below, periodic inspections shall be carried out:

(a) Every 5 years in the case of pressure receptacles intended for the carriage of gases of classification codes 1T, 1TF, 1TO, 1TC, 1TFC, 1TOC, 2T, 2TO, 2TF, 2TC, 2TFC, 2TOC, 4A, 4F and 4C;

(b) Every 5 years in the case of pressure receptacles intended for the carriage of substances from other classes;

(c) Every 10 years in the case of pressure receptacles intended for the carriage of gases of classification codes 1A, 1O, 1F, 2A, 2O and 2F.

By derogation from this paragraph, the periodic inspection of pressure receptacles which make use of composite materials (composite pressure receptacles) shall be carried out at intervals determined by the competent authority of the Contracting Party to ADR which has approved the technical code for the design and construction.

Special packing provisions

(10) Keys for the column "Special packing provisions":

Material compatibility (for gases see ISO 11114-1:1997 and ISO 11114-2:2000)

a: Aluminium alloy pressure receptacles are not authorized.

b: Copper valves shall not be used.

c: Metal parts in contact with the contents shall not contain more than 65% copper.

d: When steel pressure receptacles are used, only those resistant to hydrogen embrittlement shall be authorized.

Requirements for toxic substances with an LC_{50} less than or equal to 200 ml/m^3 (ppm)

k: Valve outlets shall be fitted with gas tight plugs or caps which shall be made of material not liable to attack by the contents of the pressure receptacle.

Each cylinder within a bundle shall be fitted with an individual valve that shall be closed during carriage. After filling, the manifold shall be evacuated, purged and plugged.

Pressure receptacles shall not be fitted with a pressure relief device.

Cylinders and individual cylinders in a bundle shall be limited to a maximum water capacity of 85 litres.

Each valve shall have a taper threaded connection directly to the pressure receptacle and be capable of withstanding the test pressure of the pressure receptacle.

Each valve shall either be of the packless type with non-perforated diaphragm, or be of a type which prevents leakage through or past the packing.

Carriage in capsules is not allowed.

Each pressure receptacle shall be tested for leakage after filling.

Gas specific provisions

l: UN No. 1040 ethylene oxide may also be packed in hermetically sealed glass or metal inner packagings suitably cushioned in fibreboard, wooden or metal boxes meeting the packing group I performance level. The maximum quantity permitted in any glass inner packaging is 30 g, and the maximum quantity permitted in any metal inner packaging is 200 g. After filling, each inner packaging shall be determined to be leak-tight by placing the inner packaging in a hot water bath at a temperature, and for a period of time, sufficient to ensure that an internal pressure equal to the vapour pressure of ethylene oxide at 55 °C is achieved. The total quantity in any outer packaging shall not exceed 2.5 kg.

m: Pressure receptacles shall be filled to a working pressure not exceeding 5 bar.

n: A pressure receptacle shall contain not more than 5 kg of the gas.

o: In no case shall the working pressure or filling ratio shown in the tables be exceeded.

p: For UN No. 1001 acetylene, dissolved, and UN No. 3374 acetylene, solvent free: cylinders shall be filled with a homogeneous monolithic porous mass; the working pressure and the quantity of acetylene shall not exceed the values prescribed in the approval or in ISO 3807-1:2000 or ISO 3807-2:2000, as applicable.

For UN No. 1001 acetylene, dissolved: cylinders shall contain a quantity of acetone or suitable solvent as specified in the approval (see ISO 3807-1:2000 or ISO 3807-2:2000, as applicable); cylinders fitted with pressure relief devices or manifolded together shall be carried vertically.

Alternatively, for UN No. 1001 acetylene, dissolved: cylinders which are not UN pressure receptacles may be filled with a non monolithic porous mass; the working pressure, the quantity of acetylene and the quantity of solvent shall not exceed the values prescribed in the approval. The maximum test period for periodic inspection of the cylinders shall not exceed five years.

A test pressure of 52 bar shall be applied only to cylinders conforming to ISO 3807-2:2000.

q: The valves of pressure receptacles for pyrophoric gases or flammable mixtures of gases containing more than 1% of pyrophoric compounds shall be fitted with gas-tight plugs or caps which shall be made of material not liable to attack by the contents of the pressure receptacle. When these pressure receptacles are manifolded in a bundle, each of the pressure receptacles shall be fitted with an individual valve that shall be closed during carriage, and the manifold outlet valve shall be fitted with a gas-tight plug or cap. Carriage in capsules is not allowed.

r: Allowed for carriage in capsules under the following conditions:

(a) The mass of gas shall not exceed 150 g per capsule;

(b) The capsules shall be free from faults liable to impair the strength;

(c) The leakproofness of the closure shall be ensured by an additional device (cap, crown, seal, binding, etc.) capable of preventing any leakage of the closure during carriage;

(d) The capsules shall be placed in an outer packaging of sufficient strength. A package shall not weigh more than 75 kg.

s: Aluminium alloy pressure receptacles shall be:

- Equipped only with brass or stainless steel valves; and
- Cleaned for hydrocarbons contamination and not contaminated with oil. UN pressure receptacles shall be cleaned in accordance with ISO 11621:1997.

ta: Other criteria may be used for filling of welded steel cylinders intended for the carriage of substances of UN No. 1965:

(a) with the agreement of the competent authorities of the countries where the carriage is carried out; and

(b) in compliance with the provisions of a national code or standard recognised by the competent authorities or standard EN 1439:1996 "Transportable refillable steel cylinders for liquefied petroleum Gases (LPG) – Procedures for checking before, during and after refilling".

When the criteria for filling are different from those in P200(5), the transport document shall include the statement "Carriage in accordance with packing instruction P200, special packing provision t" and the indication of the reference temperature used for the calculation of the filling ratio.

Periodic inspection

u: The interval between periodic tests may be extended to 10 years for aluminium alloy pressure receptacles. This derogation may only be applied to UN pressure receptacles when the alloy of the pressure receptacle has been subjected to stress corrosion testing as specified in ISO 7866:1999.

v: The interval between inspections for steel cylinders may be extended to 15 years:

(a) with the agreement of the competent authority (authorities) of the country (countries) where the periodic inspection and the carriage take place; and

(b) in accordance with the requirements of a technical code or a standard recognised by the competent authority, or standard EN 1440:1996 "Transportable refillable welded cylinders for liquefied petroleum gas (LPG) – Periodic requalification".

Requirements for N.O.S. entries and for mixtures

z: The construction materials of the pressure receptacles and their accessories shall be compatible with the contents and shall not react to form harmful or dangerous compounds therewith.

The test pressure and filling ratio shall be calculated in accordance with the relevant requirements of (5).

Unless otherwise specified in the tables of this packing instruction, toxic substances with an LC_{50} less than or equal to 200 ml/m^3 shall not be carried in tubes, pressure drums or MEGCs and shall meet the requirements of special packing provision "k".

For pressure receptacles containing pyrophoric gases or flammable mixtures of gases containing more than 1% pyrophoric compounds, the requirements of special packing provision "q" shall be met.

The necessary steps shall be taken to prevent dangerous reactions (i.e. polymerisation or decomposition) during carriage. If necessary, stabilisation or addition of an inhibitor shall be required.

Mixtures containing UN No. 1911 diborane, shall be filled to a pressure such that, if complete decomposition of the diborane occurs, two thirds of the test pressure of the pressure receptacle shall not be exceeded.

Requirements for substances not in Class 2

ab: Pressure receptacles shall satisfy the following conditions:

(i) The pressure test shall include an inspection of the inside of the pressure receptacles and check of accessories;

(ii) In addition resistance to corrosion shall be checked every two years by means of suitable instruments (e.g. ultrasound) and the condition of the accessories verified;

(iii) Wall thickness shall not be less than 3 mm.

ac: Tests and inspections shall be carried out under the supervision of an expert approved by the competent authority.

ad: Pressure receptacles shall satisfy the following conditions:

(i) Pressure receptacles shall be designed for a design pressure of not less than 2.1 MPa (21 bar) (gauge pressure);

(ii) In addition to the marks for refillable receptacles, the pressure receptacles shall bear the following particulars in clearly legible and durable characters:

- The UN number and the proper shipping name of the substance according to 3.1.2;
- The maximum permitted mass when filled and the tare of the pressure receptacle, including accessories fitted during filling, or the gross mass.

(11) The applicable requirements of this packing instruction are considered to have been complied with if the following standards, as relevant, are applied:

Applicable requirements	Reference	Title of document
(7)	EN 1919:2000	Transportable gas cylinders. Cylinders for gases (excluding acetylene and LPG). Inspection at time of filling
(7)	EN 1920:2000	Transportable gas cylinders. Cylinders for compressed gases (excluding acetylene). Inspection at time of filling
(7)	EN 12754:2001	Transportable gas cylinders. Cylinders for dissolved acetylene. Inspection at time of filling
(7)	EN 13365:2002	Transportable gas cylinders – Cylinder bundles for permanent and liquefied gases (excluding acetylene) – Inspection at the time of filling
(10)(p)	EN1801: 1998	Transportable gas cylinders – Filling conditions for single acetylene cylinders (including list of permissible porous masses)
(10)(p)	EN 12755: 2000	Transportable gas cylinders – Filling conditions for acetylene bundles

Table 1: COMPRESSED GASES

UN No.	Name and description	Classification code	LC_{50} ml/m^3	Cylinders	Tubes	Pressure drums	Bundles of cylinders	Test period, years [a]	Test pressure, bar [b]	Working pressure, bar [b]	Special packing provisions
1002	AIR, COMPRESSED	1A		X	X	X	X	10			
1006	ARGON, COMPRESSED	1A		X	X	X	X	10			
1014	CARBON DIOXIDE AND OXYGEN MIXTURE, COMPRESSED	1O		X	X	X	X	10			
1016	CARBON MONOXIDE, COMPRESSED	1TF	3760	X	X	X	X	5			u
1023	COAL GAS, COMPRESSED	1TF		X	X	X	X	5			
1045	FLUORINE, COMPRESSED	1TOC	185	X			X	5	200	30	a, k, n, o
1046	HELIUM, COMPRESSED	1A		X	X	X	X	10			
1049	HYDROGEN, COMPRESSED	1F		X	X	X	X	10			d
1056	KRYPTON, COMPRESSED	1A		X	X	X	X	10			
1065	NEON, COMPRESSED	1A		X	X	X	X	10			
1066	NITROGEN, COMPRESSED	1A		X	X	X	X	10			
1071	OIL GAS, COMPRESSED	1TF		X	X	X	X	5			
1072	OXYGEN, COMPRESSED	1O		X	X	X	X	10			s
1612	HEXAETHYL TETRAPHOSPHATE AND COMPRESSED GAS MIXTURE	1T		X	X	X	X	5			z
1660	NITRIC OXIDE, COMPRESSED	1TOC	115	X			X	5	200	50	k, o
1953	COMPRESSED GAS, TOXIC, FLAMMABLE, N.O.S.	1TF	≤ 5000	X	X	X	X	5			z
1954	COMPRESSED GAS, FLAMMABLE, N.O.S	1F		X	X	X	X	10			z
1955	COMPRESSED GAS, TOXIC, N.O.S.	1T	≤ 5000	X	X	X	X	5			z
1956	COMPRESSED GAS, N.O.S.	1A		X	X	X	X	10			z
1957	DEUTERIUM, COMPRESSED	1F		X	X	X	X	10			d
1964	HYDROCARBON GAS MIXTURE, COMPRESSED, N.O.S.	1F		X	X	X	X	10			z
1971	METHANE, COMPRESSED or NATURAL GAS, COMPRESSED with high methane content	1F		X	X	X	X	10			
1979	RARE GASES MIXTURE, COMPRESSED	1A		X	X	X	X	10			
1980	RARE GASES AND OXYGEN MIXTURE, COMPRESSED	1A		X	X	X	X	10			
1981	RARE GASES AND NITROGEN MIXTURE, COMPRESSED	1A	X	X			X	10			

Table 1: COMPRESSED GASES

UN No.	Name and description	Classification code	LC_{50} ml/m^3	Cylinders	Tubes	Pressure drums	Bundles of cylinders	Test period, years [a]	Test pressure, bar [b]	Working pressure, bar [b]	Special packing provisions
2034	HYDROGEN AND METHANE MIXTURE, COMPRESSED	1F		X	X	X	X	10			d
2190	OXYGEN DIFLUORIDE, COMPRESSED	1TOC	2.6	X			X	5	200	30	a, k, n, o
2600	CARBON MONOXIDE AND HYDROGEN MIXTURE, COMPRESSED	1TF	Between 3760 and 5000	X	X	X	X	5			d, u
3156	COMPRESSED GAS, OXIDIZING, N.O.S.	1O		X	X	X	X	10			z
3303	COMPRESSED GAS, TOXIC, OXIDIZING, N.O.S.	1TO	≤ 5000	X	X	X	X	5			z
3304	COMPRESSED GAS, TOXIC, CORROSIVE, N.O.S.	1TC	≤ 5000	X	X	X	X	5			z
3305	COMPRESSED GAS, TOXIC, FLAMMABLE, CORROSIVE, N.O.S.	1TFC	≤ 5000	X	X	X	X	5			z
3306	COMPRESSED GAS, TOXIC, OXIDIZING, CORROSIVE, N.O.S.	1TOC	≤ 5000	X	X	X	X	5			z

[a] *Not applicable for pressure receptacles made of composite materials.*

[b] *Where the entries are blank, the working pressure shall not exceed two thirds of the test pressure.*

Table 2: LIQUEFIED GASES AND DISSOLVED GASES

UN No.	Name and description	Classification code	LC_{50} ml/m^3	Cylinders	Tubes	Pressure drums	Bundles of cylinders	Test period, years [a]	Test pressure, bar	Filling ratio	Special packing provisions
1001	ACETYLENE, DISSOLVED	4F		X			X	10	60		c, p
1005	AMMONIA, ANHYDROUS	2TC	4000	X	X	X	X	5	33	0.53	b, r
1008	BORON TRIFLUORIDE	2TC	387	X	X	X	X	5	225 300	0.715 0.86	
1009	BROMOTRIFLUORO-METHANE (REFRIGERANT GAS R 13B1)	2A		X	X	X	X	10	42 120 250	1.13 1.44 1.60	r r r
1010	BUTADIENES, STABILIZED (1,2-butadiene) or	2F		X	X	X	X	10	10	0.59	r
1010	BUTADIENES, STABILIZED (1,3-butadiene) or	2F		X	X	X	X	10	10	0.55	r
1010	BUTADIENES AND HYDROCARBON MIXTURE, STABILIZED	2F		X	X	X	X	10	10	0.50	r, v, z
1011	BUTANE	2F		X	X	X	X	10	10	0.51	r, v
1012	BUTYLENES MIXTURES or	2F		X	X	X	X	10	10	0.50	r, z
1012	1-BUTYLENE or	2F		X	X	X	X	10	10	0.53	
1012	CIS-2-BUTYLENE or	2F		X	X	X	X	10	10	0.55	
1012	TRANS-2 BUTYLENE	2F		X	X	X	X	10	10	0.54	
1013	CARBON DIOXIDE	2A		X	X	X	X	10	190 250	0.66 0.75	r r
1015	CARBON DIOXIDE AND NITROUS OXIDE MIXTURE	2A		X	X	X	X	10	250	0.75	r
1017	CHLORINE	2TC	293	X	X	X	X	5	22	1.25	a, r
1018	CHLORODIFLUORO-METHANE (REFRIGERANT GAS R 22)	2A		X	X	X	X	10	29	1.03	r
1020	CHLOROPENTAFLUORO-ETHANE (REFRIGERANT GAS R 115)	2A		X	X	X	X	10	25	1.08	r
1021	1-CHLORO-1,2,2,2-TETRAFLUOROETHANE (REFRIGERANT GAS R 124)	2A		X	X	X	X	10	12	1.20	r
1022	CHLOROTRIFLUORO-METHANE (REFRIGERANT GAS R 13)	2A		X	X	X	X	10	100 120 190 250	0.83 0.90 1.04 1.10	r r r r
1026	CYANOGEN	2TF	350	X	X	X	X	5	100	0.70	r, u
1027	CYCLOPROPANE	2F		X	X	X	X	10	20	0.53	r
1028	DICHLORODIFLUORO-METHANE (REFRIGERANT GAS R 12)	2A		X	X	X	X	10	18	1.15	r

Table 2: LIQUEFIED GASES AND DISSOLVED GASES

UN No.	Name and description	Classification code	LC_{50} ml/m^3	Cylinders	Tubes	Pressure drums	Bundles of cylinders	Test period, years [a]	Test pressure, bar	Filling ratio	Special packing provisions
1029	DICHLOROFLUORO-METHANE (REFRIGERANT GAS R 21)	2A		X	X	X	X	10	10	1.23	r
1030	1,1-DIFLUOROETHANE (REFRIGERANT GAS R 152a)	2F		X	X	X	X	10	18	0.79	r
1032	DIMETHYLAMINE, ANHYDROUS	2F		X	X	X	X	10	10	0.59	b, r
1033	DIMETHYL ETHER	2F		X	X	X	X	10	18	0.58	r
1035	ETHANE	2F		X	X	X	X	10	95 120 300	0.25 0.29 0.39	r r r
1036	ETHYLAMINE	2F		X	X	X	X	10	10	0.61	b, r
1037	ETHYL CHLORIDE	2F		X	X	X	X	10	10	0.80	a, r
1039	ETHYL METHYL ETHER	2F		X	X	X	X	10	10	0.64	r
1040	ETHYLENE OXIDE, or ETHYLENE OXIDE WITH NITROGEN up to a total pressure of 1MPa (10 bar) at 50 °C	2TF	2900	X	X	X	X	5	15	0.78	l, r
1041	ETHYLENE OXIDE AND CARBON DIOXIDE MIXTURE with more than 9% but not more than 87% ethylene oxide	2F		X	X	X	X	10	190 250	0.66 0.75	r r
1043	FERTILIZER AMMONIATING SOLUTION with free ammonia	2A		X		X	X	5			b, z
1048	HYDROGEN BROMIDE, ANHYDROUS	2TC	2860	X	X	X	X	5	60	1.54	a, d, r
1050	HYDROGEN CHLORIDE, ANHYDROUS	2TC	2810	X	X	X	X	5	100 120 150 200	0.30 0.56 0.67 0.74	a, d, r a, d, r a, d, r a, d, r
1053	HYDROGEN SULPHIDE	2TF	712	X	X	X	X	5	55	0.67	d, r, u
1055	ISOBUTYLENE	2F		X	X	X	X	10	10	0.52	r
1058	LIQUEFIED GASES, non-flammable, charged with nitrogen, carbon dioxide or air	2A		X	X	X	X	10	Test pressure = 1.5 × working pressure		r

Table 2: LIQUEFIED GASES AND DISSOLVED GASES

UN No.	Name and description	Classification code	LC_{50} ml/m^3	Cylinders	Tubes	Pressure drums	Bundles of cylinders	Test period, years [a]	Test pressure, bar	Filling ratio	Special packing provisions
1060	METHYLACETYLENE AND PROPADIENE MIXTURE, STABILIZED	2F		X	X	X	X	10			c, r, z
	Propadiene with 1% to 4% methylacetylene	2F		X	X	X	X	10	22	0.52	c, r
	Mixture P1	2F		X	X	X	X	10	30	0.49	c, r
	Mixture P2	2F		X	X	X	X	10	24	0.47	c, r
1061	METHYLAMINE, ANHYDROUS	2F		X	X	X	X	10	13	0.58	b, r
1062	METHYL BROMIDE with not more than 2% chloropicrin	2T	850	X	X	X	X	5	10	1.51	a
1063	METHYL CHLORIDE (REFRIGERANT GAS R 40)	2F		X	X	X	X	10	17	0.81	a, r
1064	METHYL MERCAPTAN	2TF	1350	X	X	X	X	5	10	0.78	d, r, u
1067	DINITROGEN TETROXIDE (NITROGEN DIOXIDE)	2TOC	115	X		X	X	5	10	1.30	k
1069	NITROSYL CHLORIDE	2TC	35	X			X	5	13	1.10	k, r
1070	NITROUS OXIDE	2O		X	X	X	X	10	180 225 250	0.68 0.74 0.75	
1075	PETROLEUM GASES, LIQUEFIED	2F		X	X	X	X	10			v, z
1076	PHOSGENE	2TC	5	X		X	X	5	20	1.23	k, r
1077	PROPYLENE	2F		X	X	X	X	10	30	0.43	r
1078	REFRIGERANT GAS, N.O.S.	2A		X	X	X	X	10			r, z
	Mixture F1	2A		X	X	X	X	10	12	1.23	
	Mixture F2	2A		X	X	X	X	10	18	1.15	
	Mixture F3	2A		X	X	X	X	10	29	1.03	
1079	SULPHUR DIOXIDE	2TC	2520	X	X	X	X	5	14	1.23	r
1080	SULPHUR HEXAFLUORIDE	2A		X	X	X	X	10	70 140 160	1.04 1.33 1.37	r r r
1081	TETRAFLUOROETHYLENE, STABILIZED	2F		X	X	X	X	10	200		m, o, r
1082	TRIFLUOROCHLOROETHY-LENE, STABILIZED	2TF	2000	X	X	X	X	5	19	1.13	r, u
1083	TRIMETHYLAMINE, ANHYDROUS	2F		X	X	X	X	10	10	0.56	b, r
1085	VINYL BROMIDE, STABILIZED	2F		X	X	X	X	10	10	1.37	a, r
1086	VINYL CHLORIDE, STABILIZED	2F		X	X	X	X	10	12	0.81	a, r
1087	VINYL METHYL ETHER, STABILIZED	2F		X	X	X	X	10	10	0.67	r

Table 2: LIQUEFIED GASES AND DISSOLVED GASES

UN No.	Name and description	Classification code	LC_{50} ml/m^3	Cylinders	Tubes	Pressure drums	Bundles of cylinders	Test period, years [a]	Test pressure, bar	Filling ratio	Special packing provisions
1581	CHLOROPICRIN AND METHYL BROMIDE MIXTURE with more than 2% chloropicrin	2T	850	X	X	X	X	5	10	1.51	a
1582	CHLOROPICRIN AND METHYL CHLORIDE MIXTURE	2T	[d]	X	X	X	X	5	17	0.81	a
1589	CYANOGEN CHLORIDE, STABILIZED	2TC	80	X			X	5	20	1.03	k
1741	BORON TRICHLORIDE	2TC	2541	X	X	X	X	5	10	1.19	r
1749	CHLORINE TRIFLUORIDE	2TOC	299	X	X	X	X	5	30	1.40	a
1858	HEXAFLUOROPROPYLENE (REFRIGERANT GAS R 1216)	2A		X	X	X	X	10	22	1.11	r
1859	SILICON TETRAFLUORIDE	2TC	450	X	X	X	X	5	200 300	0.74 1.10	
1860	VINYL FLUORIDE, STABILIZED	2F		X	X	X	X	10	250	0.64	a, r
1911	DIBORANE	2TF	80	X			X	5	250	0.07	d, k, o
1912	METHYL CHLORIDE AND METHYLENE CHLORIDE MIXTURE	2F		X	X	X	X	10	17	0.81	a, r
1952	ETHYLENE OXIDE AND CARBON DIOXIDE MIXTURE with not more than 9% ethylene oxide	2A		X	X	X	X	10	190 250	0.66 0.75	r r
1958	1,2-DICHLORO-1,1,2,2-TETRAFLUOROETHANE (REFRIGERANT GAS R 114)	2A		X	X	X	X	10	10	1.30	r
1959	1,1-DIFLUOROETHYLENE (REFRIGERANT GAS R 1132a)	2F		X	X	X	X	10	250	0.77	r
1962	ETHYLENE	2F		X	X	X	X	10	225 300	0.34 0.37	
1965	HYDROCARBON GAS MIXTURE, LIQUEFIED,N.O.S	2F		X	X	X	X	10		[b]	r, ta, v, z
	Mixture A	2F						10	10	0.50	
	Mixture A01	2F						10	15	0.49	
	Mixture A02	2F						10	15	0.48	
	Mixture A0	2F						10	15	0.47	
	Mixture A1	2F						10	20	0.46	
	Mixture B1	2F						10	25	0.45	
	Mixture B2	2F						10	25	0.44	
	Mixture B	2F						10	25	0.43	
	Mixture C	2F						10	30	0.42	

Table 2: LIQUEFIED GASES AND DISSOLVED GASES

UN No.	Name and description	Classification code	LC_{50} ml/m^3	Cylinders	Tubes	Pressure drums	Bundles of cylinders	Test period, years [a]	Test pressure, bar	Filling ratio	Special packing provisions
1967	INSECTICIDE GAS, TOXIC, N.O.S.	2T		X	X	X	X	5			z
1968	INSECTICIDE GAS, N.O.S.	2A		X	X	X	X	10			r, z
1969	ISOBUTANE	2F		X	X	X	X	10	10	0.49	r, v
1973	CHLORODIFLUOROME-THANE AND CHLOROPENTAFLUORO-ETHANE MIXTURE with fixed boiling point, with approximately 49% chlorodifluoromethane (REFRIGERANT GAS R 502)	2A		X	X	X	X	10	31	1.05	r
1974	CHLORODIFLUORO-BROMOMETHANE (REFRIGERANT GAS R 12B1)	2A		X	X	X	X	10	10	1.61	r
1975	NITRIC OXIDE AND DINITROGEN TETROXIDE MIXTURE (NITRIC OXIDE AND NITROGEN DIOXIDE MIXTURE)	2TOC	115	X		X	X	5			k, z
1976	OCTAFLUOROCYCLO-BUTANE (REFRIGERANT GAS RC 318)	2.A		X	X	X	X	10	11	1.34	r
1978	PROPANE	2F		X	X	X	X	10	25	0.42	r, v
1982	TETRAFLUOROMETHANE (REFRIGERANT GAS R 14)	2A		X	X	X	X	10	200 300	0.62 0.94	
1983	1-CHLORO-2,2,2-TRIFLUOROETHANE (REFRIGERANT GAS R 133a)	2A		X	X	X	X	10	10	1.18	r
1984	TRIFLUOROMETHANE (REFRIGERANT GAS R 23)	2A		X	X	X	X	10	190 250	0.87 0.95	r r
2035	1,1,1-TRIFLUOROETHANE (REFRIGERANT GAS R 143a)	2F		X	X	X	X	10	35	0.75	r
2036	XENON	2A		X	X	X	X	10	130	1.24	
2044	2,2-DIMETHYLPROPANE	2F		X	X	X	X	10	10	0.53	r
2073	AMMONIA SOLUTION, relative density less than 0.880 at 15 °C in water,	4A									
	with more than 35% but not more than 40% ammonia	4A		X	X	X	X	5	10	0.80	b
	with more than 40% but not more than 50% ammonia	4A		X	X	X	X	5	12	0.77	b
2188	ARSINE	2TF	20	X			X	5	42	1.10	d, k
2189	DICHLOROSILANE	2TFC	314	X	X	X	X	5	10	0.90	
2191	SULPHURYL FLUORIDE	2T	3020	X	X	X	X	5	50	1.10	u

Table 2: LIQUEFIED GASES AND DISSOLVED GASES

UN No.	Name and description	Classification code	LC_{50} ml/m^3	Cylinders	Tubes	Pressure drums	Bundles of cylinders	Test period, years [a]	Test pressure, bar	Filling ratio	Special packing provisions
2192	GERMANE [c]	2TF	620	X	X	X	X	5	250	1.02	d, r
2193	HEXAFLUOROETHANE (REFRIGERANT GAS R 116)	2A		X	X	X	X	10	200	1.10	
2194	SELENIUM HEXAFLUORIDE	2TC	50	X			X	5	36	1.46	k, r
2195	TELLURIUM HEXAFLUORIDE	2TC	25	X			X	5	20	1.00	k, r
2196	TUNGSTEN HEXAFLUORIDE	2TC	160	X			X	5	10	2.70	a, k, r
2197	HYDROGEN IODIDE, ANHYDROUS	2TC	2860	X	X	X	X	5	23	2.25	a, d, r
2198	PHOSPHORUS PENTAFLUORIDE	2TC	190	X			X	5	200 300	0.90 1.34	k k
2199	PHOSPHINE [c]	2TF	20	X			X	5	225 250	0.30 0.45	d, k, r d, k, r
2200	PROPADIENE, STABILIZED	2F		X	X	X	X	10	22	0.50	r
2202	HYDROGEN SELENIDE, ANHYDROUS	2TF	2	X			X	5	31	1.60	k
2203	SILANE [c]	2F		X	X	X	X	10	225 250	0.32 0.36	d, q d, q
2204	CARBONYL SULPHIDE	2TF	1700	X	X	X	X	5	26	0.84	r, u
2417	CARBONYL FLUORIDE	2TC	360	X	X	X	X	5	200 300	0.47 0.70	
2418	SULPHUR TETRAFLUORIDE	2TC	40	X			X	5	30	0.91	k, r
2419	BROMOTRIFLUORO-ETHYLENE	2F		X	X	X	X	10	10	1.19	r
2420	HEXAFLUOROACETONE	2TC	470	X	X	X	X	5	22	1.08	r
2421	NITROGEN TRIOXIDE	2TOC	CARRIAGE PROHIBITED								
2422	OCTAFLUOROBUT-2-ENE (REFRIGERANT GAS R 1318)	2A		X	X	X	X	10	12	1.34	r
2424	OCTAFLUOROPROPANE (REFRIGERANT GAS R 218)	2A		X	X	X	X	10	25	1.09	r
2451	NITROGEN TRIFLUORIDE	2O		X	X	X	X	10	200 300	0.50 0.75	
2452	ETHYLACETYLENE, STABILIZED	2F		X	X	X	X	10	10	0.57	c, r
2453	ETHYL FLUORIDE (REFRIGERANT GAS R 161)	2F		X	X	X	X	10	30	0.57	r
2454	METHYL FLUORIDE (REFRIGERANT GAS R 41)	2F		X	X	X	X	10	300	0.36	r
2455	METHYL NITRITE	2A	CARRIAGE PROHIBITED								
2517	1-CHLORO-1,1-DIFLUOROETHANE (REFRIGERANT GAS R 142b)	2F		X	X	X	X	10	10	0.99	r

Table 2: LIQUEFIED GASES AND DISSOLVED GASES

UN No.	Name and description	Classification code	LC_{50} ml/m^3	Cylinders	Tubes	Pressure drums	Bundles of cylinders	Test period, years [a]	Test pressure, bar	Filling ratio	Special packing provisions
2534	METHYLCHLOROSILANE	2TFC	600	X	X	X	X	5			r, z
2548	CHLORINE PENTAFLUORIDE	2TOC	122	X			X	5	13	1.49	a, k
2599	CHLOROTRIFLUORO-METHANE AND TRIFLUOROMETHANE AZEOTROPIC MIXTURE with approximately 60% chlorotrifluoromethane (REFRIGERANT GAS R 503)	2A		X	X	X	X	10	31 42 100	0.11 0.20 0.66	r r r
2601	CYCLOBUTANE	2F		X	X	X	X	10	10	0.63	r
2602	DICHLORODIFLUORO-METHANE AND DIFLUOROETHANE AZEOTROPIC MIXTURE with approximately 74% dichlorodifluoromethane (REFRIGERANT GAS R 500)	2A		X	X	X	X	10	22	1.01	r
2676	STIBINE	2TF	20	X			X	5	20	1.20	k, r
2901	BROMINE CHLORIDE	2TOC	290	X	X	X	X	5	10	1.50	a
3057	TRIFLUOROACETYL CHLORIDE	2TC	10	X		X	X	5	17	1.17	k, r
3070	ETHYLENE OXIDE AND DICHLORODIFLUORO-METHANE MIXTURE with not more than 12,5% ethylene oxide	2A		X	X	X	X	10	18	1.09	r
3083	PERCHLORYL FLUORIDE	2TO	770	X	X	X	X	5	33	1.21	u
3153	PERFLUORO(METHYL VINYL ETHER)	2F		X	X	X	X	10	20	0.75	r
3154	PERFLUORO(ETHYL VINYL ETHER)	2F		X	X	X	X	10	10	0.98	r
3157	LIQUEFIED GAS, OXIDIZING, N.O.S.	2O		X	X	X	X	10			z
3159	1,1,1,2-TETRAFLUOROETHANE (REFRIGERANT GAS R 134a)	2A		X	X	X	X	10	22	1.04	r
3160	LIQUEFIED GAS, TOXIC, FLAMMABLE, N.O.S.	2TF	≤ 5000	X	X	X	X	5			r, z
3161	LIQUEFIED GAS, FLAMMABLE, N.O.S.	2F		X	X	X	X	10			r, z
3162	LIQUEFIED GAS, TOXIC, N.O.S.	2T	≤ 5000	X	X	X	X	5			z
3163	LIQUEFIED GAS, N.O.S.	2A		X	X	X	X	10			r, z
3220	PENTAFLUOROETHANE (REFRIGERANT GAS R 125)	2A		X	X	X	X	10	49 36	0.95 0.72	r r

Table 2: LIQUEFIED GASES AND DISSOLVED GASES

UN No.	Name and description	Classification code	LC_{50} ml/m^3	Cylinders	Tubes	Pressure drums	Bundles of cylinders	Test period, years [a]	Test pressure, bar	Filling ratio	Special packing provisions
3252	DIFLUOROMETHANE (REFRIGERANT GAS R 32)	2F		X	X	X	X	10	48	0.78	r
3296	HEPTAFLUOROPROPANE (REFRIGERANT GAS R 227)	2A		X	X	X	X	10	15	1.20	r
3297	ETHYLENE OXIDE AND CHLOROTETRAFLUORO-ETHANE MIXTURE with not more than 8.8% ethylene oxide	2A		X	X	X	X	10	10	1.16	r
3298	ETHYLENE OXIDE AND PENTAFLUOROETHANE MIXTURE with not more than 7.9% ethylene oxide	2A		X	X	X	X	10	26	1.02	r
3299	ETHYLENE OXIDE AND TETRAFLUOROETHANE MIXTURE with not more than 5.6% ethylene oxide	2A		X	X	X	X	10	17	1.03	r
3300	ETHYLENE OXIDE AND CARBON DIOXIDE MIXTURE with more than 87% ethylene oxide	2TF	More than 2900	X	X	X	X	5	28	0.73	r
3307	LIQUEFIED GAS, TOXIC, OXIDIZING, N.O.S.	2TO	≤ 5000	X	X	X	X	5			z
3308	LIQUEFIED GAS, TOXIC, CORROSIVE, N.O.S.	2TC	≤ 5000	X	X	X	X	5			r, z
3309	LIQUEFIED GAS, TOXIC, FLAMMABLE, CORROSIVE, N.O.S.	2TFC	≤ 5000	X	X	X	X	5			r, z
3310	LIQUEFIED GAS, TOXIC, OXIDIZING, CORROSIVE, N.O.S.	2TO C	≤ 5000	X	X	X	X	5			z
3318	AMMONIA SOLUTION, relative density less than 0.880 at 15 °C in water, with more than 50% ammonia	4TC		X	X	X	X	5			b
3337	REFRIGERANT GAS R 404A (Pentafluoroethane, 1,1,1-trifluoroethane, and 1,1,1,2-tetrafluoroethane zeotropic mixture with approximately 44% pentafluoroethane and 52% 1,1,1-trifluoroethane)	2A		X	X	X	X	10	36	0.82	r
3338	REFRIGERANT GAS R 407A (Difluoromethane, pentafluoroethane, and 1,1,1,2-tetrafluoroethane zeotropic mixture with approximately 20% difluoromethane and 40% pentafluoroethane)	2A		X	X	X	X	10	36	0.94	r

Table 2: LIQUEFIED GASES AND DISSOLVED GASES

UN No.	Name and description	Classification code	LC_{50} ml/m^3	Cylinders	Tubes	Pressure drums	Bundles of cylinders	Test period, years [a]	Test pressure, bar	Filling ratio	Special packing provisions
3339	REFRIGERANT GAS R 407B (Difluoromethane, pentafluoroethane, and 1,1,1,2-tetrafluoroethane zeotropic mixture with approximately 10% difluoromethane and 70% pentafluoroethane	2A		X	X	X	X	10	38	0.93	r
3340	REFRIGERANT GAS R 407C (Difluoromethane, pentafluoroethane, and 1,1,1,2-tetrafluoroethane zeotropic mixture with approximately 23% difluoromethane and 25% pentafluoroethane)	2A		X	X	X	X	10	35	0.95	r
3354	INSECTICIDE GAS, FLAMMABLE, N.O.S	2F		X	X	X	X	10			r, z
3355	INSECTICIDE GAS, TOXIC, FLAMMABLE, N.O.S.	2TF		X	X	X	X	5			r, z
3374	ACETYLENE, SOLVENT FREE	2F		X			X	5	60		c, p

[a] *Not applicable for pressure receptacles made of composite materials.*

[b] *For mixtures of UN No. 1965, the maximum permissible filling mass per litre of capacity is as follows:*

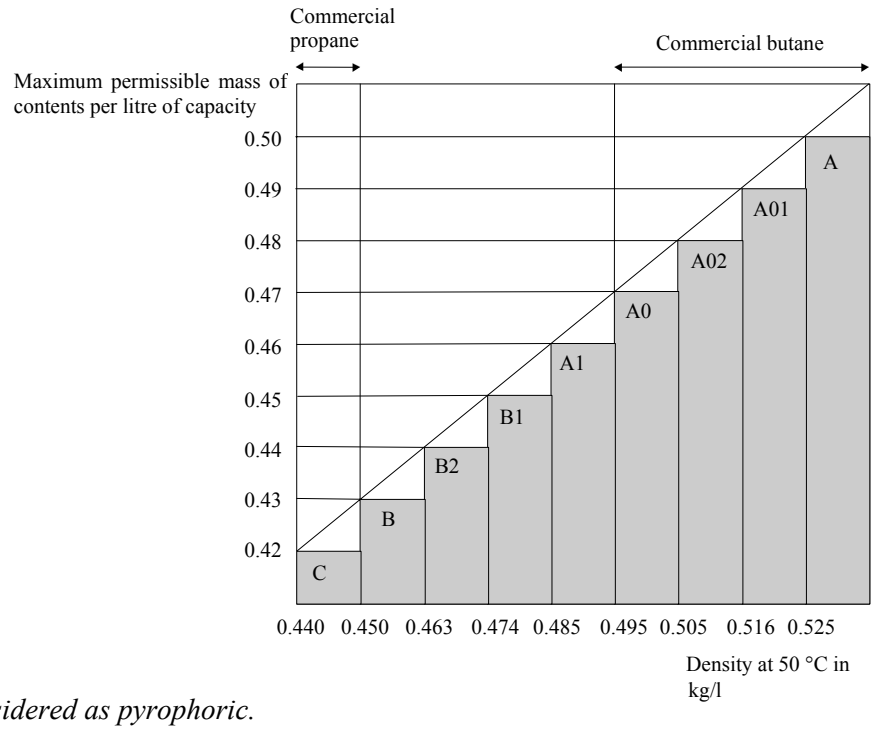

[c] *Considered as pyrophoric.*

[d] *Considered to be toxic. The LC_{50} value still to be determined.*

Table 3: SUBSTANCES NOT IN CLASS 2

UN No.	Name and description	Class	Classification Code	LC_{50} ml/m^3	Cylinders	Tubes	Pressure drums	Bundles of cylinders	Test period, years [a]	Test pressure, bar	Filling ratio	Special packing provisions
1051	HYDROGEN CYANIDE, STABILIZED containing less than 3% water	6.1	TF1	40	X			X	5	100	0.55	k
1052	HYDROGEN FLUORIDE, ANHYDROUS	8	CT1	966	X		X	X	5	10	0.84	ab, ac
1745	BROMINE PENTAFLUORIDE	5.1	OTC	25	X		X	X	5	10	[b]	k, ab, ad
1746	BROMINE TRIFLUORIDE	5.1	OTC	50	X		X	X	5	10	[b]	k, ab, ad
1790	HYDROFLUORIC ACID, solution, with more than 85% hydrofluoric acid	8	CT1	966	X		X	X	5	10	0.84	ab, ac
2495	IODINE PENTAFLUORIDE	5.1	OTC	120	X		X	X	5	10	[b]	k, ab, ad

[a] *Not applicable for pressure receptacles made of composite materials.*

[b] *A minimum ullage of 8% by volume is required.*

P201	PACKING INSTRUCTION	P201
This instruction applies to UN Nos. 3167, 3168 and 3169.		
The following packagings are authorized: (1) Cylinders tubes and pressure drums conforming to the construction, testing and filling requirements approved by the competent authority; (2) In addition, the following packagings are authorized provided that the general provisions of **4.1.1** and **4.1.3** are met. (a) For non-toxic gases, combination packagings with hermetically sealed inner packagings of glass or metal with a maximum capacity of 5 litres per package which meet the packing group III performance level; (b) For toxic gases, combination packagings with hermetically sealed inner packagings of glass or metal with a maximum capacity of 1 litre per package which meet the packing group III performance level.		

P202	PACKING INSTRUCTION	P202
	(Reserved)	

Type of packagings: Cryogenic receptacles

General instructions:

(1) The special packing provisions of 4.1.6 shall be met.

(2) The receptacles shall be so insulated that they cannot become coated with dew or hoar-frost.

(3) In the case of receptacles intended for the carriage of gases of classification code 3O, the material used to ensure the leakproofness of the joints or for the maintenance of the closures shall be compatible with the contents.

Particular instructions for closed cryogenic receptacles:

(4) Closed cryogenic receptacles constructed as specified in Chapter 6.2 are authorized for the carriage of refrigerated liquefied gases.

(5) Test pressure

Refrigerated liquids shall be filled in closed cryogenic receptacles with the following minimum test pressures:

(a) For closed cryogenic receptacles with vacuum insulation, the test pressure shall not be less than 1.3 times the sum of the maximum internal pressure of the filled receptacle, including during filling and discharge, plus 100 kPa (1 bar);

(b) For other closed cryogenic receptacles, the test pressure shall be not less than 1.3 times the maximum internal pressure of the filled receptacle, taking into account the pressure developed during filling and discharge.

(6) Degree of filling

For non-flammable, non-toxic refrigerated liquefied gases (classification codes 3A and 3O) the volume of liquid phase at the filling temperature and at a pressure of 100 kPa (1 bar) shall not exceed 98% of the water capacity of the pressure receptacle.
For flammable refrigerated liquefied gases (classification code 3F) the degree of filling shall remain below the level at which, if the contents were raised to the temperature at which the vapour pressure equalled the opening pressure of the relief valve, the volume of the liquid phase would reach 98% of the water capacity at that temperature.

(7) Pressure-relief devices

Closed cryogenic receptacles shall be fitted with at least one pressure-relief device.

(8) Compatibility

Materials used to ensure the leakproofness of the joints or for the maintenance of the closures shall be compatible with the contents. For oxidizing gases (classification code 3O) see also (3) above.

(9) Periodic inspection

Receptacles shall be subjected to periodic inspections in accordance with the provisions of 6.2.1.6. Periodic inspections shall be carried out every 10 years.
By derogation from this date, the periodic inspection of receptacles which make use of composite materials (composite receptacles) may be carried out at intervals determined by the competent authority of the Contracting Party to ADR which has approved the technical code for the design and construction.

P203	PACKING INSTRUCTION *(cont'd)*	P203

Particular instructions for open cryogenic receptacles:

(10) Open cryogenic receptacles are not allowed for flammable refrigerated liquefied gases of classification code 3F, and UN No. 2187 carbon dioxide, refrigerated liquid and its mixtures.

(11) The receptacles shall be equipped with devices which prevent the liquid from splashing out.

(12) Glass receptacles shall be double-walled vacuum insulated and surrounded by an absorbent insulating material; they shall be protected by iron-wire baskets and placed in metal cases. The metal cases for the glass receptacles and the other receptacles shall be fitted with means of handling.

(13) The openings of the receptacles shall be fitted with devices allowing gases to escape, preventing any splashing out of the liquid, and so fixed that they cannot fall out.

(14) In the case of UN No. 1073 oxygen refrigerated liquid and mixtures thereof, the devices referred to above and the absorbent insulating material surrounding the glass receptacles shall be made of incombustible materials.

Reference to standards
(*reserved*)

P204	PACKING INSTRUCTION	P204

This packing instruction applies to UN No. 1950 aerosols and UN No. 2037 receptacles, small, containing gas (gas cartridges)

(1) The special packing provisions of **4.1.6** shall be met when applicable.

(2) Receptacles shall be so closed and leakproof as to prevent escape of the gases.

(3) Aerosols and gas cartridges shall be placed in wooden boxes or strong fibreboard or metal boxes; UN No. 1950 aerosols made of glass or synthetic material and liable to shatter shall be separated from one another by interposed sheets of fibreboard or of another suitable material.

(4) A package shall not weigh more than 50 kg if fibreboard boxes are used or more than 75 kg if other packagings are used.

(5) In the case of carriage by full load, metal articles may also be packed as follows: the articles shall be grouped together in units on trays and held in position with an appropriate plastics cover; these units shall be stacked and suitably secured on pallets.

P205	PACKING INSTRUCTION	P205

(Deleted)

P206	PACKING INSTRUCTION	P206

This packing instruction applies to UN No. 3150 devices, small, hydrocarbon gas powered or hydrocarbon gas refills for small devices

(1) The special packing provisions of **4.1.6** when applicable shall be met.

(2) The articles shall comply with the provisions of the country in which they were filled.

(3) The devices and refills shall be packed in outer packagings conforming to 6.1.4 tested and approved in accordance with Chapter 6.1 for packing group II.

P300	PACKING INSTRUCTION	P300
This instruction applies to UN No. 3064.		
The following packagings are authorized, provided that the general provisions of **4.1.1** and **4.1.3** are met: Combination packagings consisting of inner metal cans of not more than 1 litre capacity each and outer wooden boxes (4C1, 4C2, 4D or 4F) containing not more than 5 litres of solution.		
Additional requirements: 1. Metal cans shall be completely surrounded with absorbent cushioning material. 2. Wooden boxes shall be completely lined with suitable material impervious to water and nitroglycerin.		

P301	PACKING INSTRUCTION	P301
This instruction applies to UN No. 3165.		
The following packagings are authorized, provided that the general provisions of **4.1.1** and **4.1.3** are met: (1) Aluminium pressure vessel made from tubing and having welded heads. Primary containment of the fuel within this vessel shall consist of a welded aluminium bladder having a maximum internal volume of 46 litres. The outer vessel shall have a minimum design gauge pressure of 1 275 kPa and a minimum burst gauge pressure of 2 755 kPa. Each vessel shall be leak checked during manufacture and before dispatch and shall be found leakproof. The complete inner unit shall be securely packed in non-combustible cushioning material, such as vermiculite, in a strong outer tightly closed metal packaging which will adequately protect all fittings. Maximum quantity of fuel per unit and package is 42 litres. (2) Aluminium pressure vessel. Primary containment of the fuel within this vessel shall consist of a welded vapour tight fuel compartment with an elastomeric bladder having a maximum internal volume of 46 litres. The pressure vessel shall have a minimum design gauge pressure of 2 860 kPa and a minimum burst gauge pressure of 5 170 kPa. Each vessel shall be leak-checked during manufacture and before dispatch and shall be securely packed in non-combustible cushioning material such as vermiculite, in a strong outer tightly closed metal packaging which will adequately protect all fittings. Maximum quantity of fuel per unit and package is 42 litres.		

P302	PACKING INSTRUCTION	P302
This instruction applies to UN No. 3269.		
The following packagings are authorized, provided the general provisions of **4.1.1** and **4.1.3** are met: Combination packagings which meet the packing group II or III performance level according to the criteria for Class 3, applied to the base material. The base material and the activator (organic peroxide) shall be each separately packed in inner packagings. The components may be placed in the same outer packaging provided they will not interact dangerously in the event of a leakage. The activator shall have a maximum quantity of 125 ml per inner packaging if liquid, and 500 g per inner packaging if solid.		

P400	PACKING INSTRUCTION	P400

The following packagings are authorized, provided that the general provisions of **4.1.1** and **4.1.3** are met (see also the Table in 4.1.4.4):

(1) Steel cylinders, tubes and pressure drums, which shall comply with the appropriate requirements in the Table of 4.1.4.4. Valves shall be protected with steel valve protection caps or collars or the cylinders, tubes or pressure drums shall be overpacked in strong rigid outer packagings. Cylinders, tubes and pressure drums shall be secured to prevent movement in the outer packaging and shall be packaged and carried so that the pressure relief devices remain in the vapour space during normal conditions of handling and carriage;

(2) Boxes (4A, 4B, 4C1, 4C2, 4D, 4F or 4G), drums (1A2, 1B2, 1N2, 1D or 1G) or jerricans (3A2 or 3B2) enclosing hermetically sealed metal cans with inner packagings of glass or metal, with a capacity of not more than 1 litre each, having threaded closures with gaskets. Inner packagings shall be cushioned on all sides with dry, absorbent, non-combustible material in a quantity sufficient to absorb the entire contents. Inner packagings shall not be filled to more than 90% of their capacity. Outer packagings shall have a maximum net mass of 125 kg;

(3) Steel, aluminium or metal drums (1A2, 1B2 or 1N2), jerricans (3A2 or 3B2) or boxes (4A or 4B) with a maximum net mass of 150 kg each with hermetically sealed inner metal cans not more than 4 litre capacity each, with threaded closures fitted with gaskets. Inner packagings shall be cushioned on all sides with dry, absorbent, non-combustible material in a quantity sufficient to absorb the entire contents. Each layer of inner packagings shall be separated by a dividing partition in addition to cushioning material. Inner packagings shall not be filled to more than 90% of their capacity.

Special packing provision:

PP86 For UN Nos. 3392 and 3394, air shall be eliminated from the vapour space by nitrogen or other means.

P401	PACKING INSTRUCTION	P401

The following packagings are authorized, provided that the general provisions of **4.1.1** and **4.1.3** are met (see also the Table in 4.1.4.4):

(1) Steel cylinders, tubes and pressure drums, which shall comply with the appropriate requirements in the Table of 4.1.4.4. Valves shall be protected with steel valve protection caps or collars or the cylinders, tubes or pressure drums shall be overpacked in strong wood, fibreboard or plastics boxes. Cylinders, tubes and pressure drums shall be secured to prevent movement in the box and shall be packaged and carried so that the pressure relief devices remain in the vapour space during normal conditions of handling and carriage;

	Inner packaging	Outer packaging
(2) Combination packagings with inner packagings of glass metal or plastics which have threaded closures surrounded in inert cushioning and absorbent material in a quantity sufficient to absorb the entire contents.	1 *l*	30 kg maximum net mass

P402	PACKING INSTRUCTION	P402

The following packagings are authorized, provided that the general provisions of **4.1.1** and **4.1.3** are met (see also the Table in 4.1.4.4):

(1) Steel cylinders, tubes and pressure drums, which shall comply with the appropriate requirements in the Table of 4.1.4.4. Valves shall be protected with steel valve protection caps or collars or the cylinders, tubes or pressure drums shall be overpacked in strong wood, fibreboard or plastics boxes. Cylinders, tubes and pressure drums shall be secured to prevent movement in the box and shall be packaged and carried so that the pressure relief devices remain in the vapour space during normal conditions of handling and carriage;

	Maximum net mass	
	Inner packaging	**Outer packaging**
(2) Combination packagings with inner packagings of glass, metal or plastics which have threaded closures surrounded in inert cushioning and absorbent material in a quantity sufficient to absorb the entire contents.	10 kg (glass) 15 kg (metal or plastics)	125 kg 125 kg

(3) Steel drums (1A1) with a maximum capacity of 250 litres.

(4) Composite packagings consisting of a plastics receptacle with outer steel drum or aluminium (6HA1 or 6HB1) with a maximum capacity of 250 litres.

Special packing provision specific to RID and ADR:

RR4 For UN No. 3130, the openings of receptacles shall be tightly closed by means of two devices in series, one of which shall be screwed or secured in an equivalent manner.

P403	PACKING INSTRUCTION	P403

The following packagings are authorized, provided that the general provisions of **4.1.1** and **4.1.3** are met:

Combination packagings:

Inner packagings	Outer packagings	Maximum net mass
Glass 2 kg Plastics 15 kg Metal 20 kg Inner packagings shall be hermetically sealed (e.g. by taping or by threaded closures).	**Drums**	
	steel (1A2)	400 kg
	aluminium (1B2)	400 kg
	metal, other than steel or aluminium (1N2)	400 kg
	plastics (1H2)	400 kg
	plywood (1D)	400 kg
	fibre (1G)	400 kg
	Boxes	
	steel (4A)	400 kg
	aluminium (4B)	400 kg
	natural wood (4C1)	250 kg
	natural wood with sift proof walls (4C2)	250 kg
	plywood (4D)	250 kg
	reconstituted wood (4F)	125 kg
	fibreboard (4G)	125 kg
	expanded plastics (4H1)	60 kg
	solid plastics (4H2)	250 kg
	Jerricans	
	steel (3A2)	120 kg
	aluminium (3B2)	120 kg
	plastics (3H2)	120 kg

Single packagings:	Maximum net mass
Drums	
steel(1A1, 1A2)	250 kg
aluminium (1B1, 1B2)	250 kg
metal other than steel or aluminium (1N1, 1N2)	250 kg
plastics (1H1, 1H2)	250 kg
Jerricans	
steel (3A1, 3A2)	120 kg
aluminium (3B1, 3B2)	120 kg
plastics (3H1, 3H2)	120 kg
Composite packagings	
plastics receptacle with outer steel or aluminium drums (6HA1 or 6HB1)	250 kg
plastics receptacle with outer fibre, plastics or plywood drums (6HG1, 6HH1 or 6HD1)	75 kg
plastics receptacle with outer steel or aluminium crate or box or with outer wooden, plywood, fibreboard or solid plastics boxes (6HA2, 6HB2, 6HC, 6HD2, 6HG2 or 6HH2)	75 kg

Additional requirement:

Packagings shall be hermetically sealed.

Special packing provision:

PP83 For UN No. 2813, waterproof bags containing not more than 20 g of substance for the purposes of heat formation may be packaged for carriage. Each waterproof bag shall be sealed in a plastics bag and placed within an intermediate packaging. No outer packaging shall contain more than 400 g of substance. Water or liquid which may react with the water reactive substance shall not be included in the packaging.

P404	PACKING INSTRUCTION	P404

This instruction applies to pyrophoric solids: UN Nos.: 1383, 1854, 1855, 2005, 2008, 2441, 2545, 2546, 2846, 2881, 3200, 3391, 3393 and 3461.

The following packagings are authorized, provided that the general provisions of **4.1.1** and **4.1.3** are met:

(1) Combination packagings

Outer packagings: (1A2, 1B2, 1N2, 1H2, 1D, 4A, 4B, 4C1, 4C2, 4D, 4F or 4H2)

Inner packagings: Metal packagings with a capacity of not more than 15kg each. Inner packagings shall be hermetically sealed and have threaded closures;

(2) Metal packagings: (1A1, 1A2, 1B1, 1N1, 1N2, 3A1, 3A2, 3B1 and 3B2)
Maximum gross mass: 150 kg;

(3) Composite packagings: Plastics receptacle with outer steel or aluminium drum (6HA1 or 6HB1)
Maximum gross mass: 150 kg.

Special packing provision:

PP86 For UN Nos. 3391 and 3393, air shall be eliminated from the vapour spave by nitrogen or other means.

P405	PACKING INSTRUCTION	P405

This instruction applies to UN No. 1381.

The following packagings are authorized, provided that the general provisions of **4.1.1** and **4.1.3** are met:

(1) For UN No. 1381, phosphorus, wet:

(a) Combination packagings

Outer packagings: (4A, 4B, 4C1, 4C2, 4D or 4F)
Maximum net mass: 75 kg

Inner packagings:

(i) hermetically sealed metal cans, with a maximum net mass of 15kg; or

(ii) glass inner packagings cushioned on all sides with dry, absorbent, non-combustible material in a quantity sufficient to absorb the entire contents with a maximum net mass of 2 kg; or

(b) Drums (1A1, 1A2, 1B1, 1B2, 1N1 or 1N2); maximum net mass: 400 kg
Jerricans (3A1 or 3B1); maximum net mass: 120 kg.

These packagings shall be capable of passing the leakproofness test specified in 6.1.5.4 at the packing group II performance level;

(2) For UN No. 1381, dry phosphorus:

(a) When fused, drums (1A2, 1B2 or 1N2) with a maximum net mass of 400 kg; or

(b) In projectiles or hard cased articles when carried without Class 1 components: as specified by the competent authority.

P406	PACKING INSTRUCTION	P406

The following packagings are authorized, provided that the general provisions of **4.1.1** and **4.1.3** are met:

(1) Combination packagings

outer packagings: (4C1, 4C2, 4D, 4F, 4G, 4H1, 4H2, 1G, 1D, 1H2 or 3H2)

inner packagings: water-resistant packagings;

(2) Plastics, plywood or fibreboard drums (1H2, 1D or 1G) or boxes (4A, 4B, 4C1, 4D, 4F, 4C2, 4G and 4H2) with a water resistant inner bag, plastics film lining or water resistant coating;

(3) Metal drums (1A1, 1A2, 1B1, 1B2, 1N1 or 1N2), plastics drums (1H1 or 1H2), metal jerricans (3A1, 3A2, 3B1 or 3B2), plastics jerricans (3H1 or 3H2), plastics receptacle with outer steel or aluminium drums (6HA1 or 6HB1), plastics receptacle with outer fibre, plastics or plywood drums (6HG1, 6HH1 or 6HD1), plastics receptacle with outer steel or aluminium crate or box or with outer wooden, plywood, fibreboard or solid plastics boxes (6HA2, 6HB2, 6HC, 6HD2, 6HG2 or 6HH2).

Additional requirements:

1. Packagings shall be designed and constructed to prevent the loss of water or alcohol content or the content of the phlegmatizer.

2. Packagings shall be so constructed and closed so as to avoid an explosive overpressure or pressure build-up of more than 300 kPa (3 bar).

Special packing provisions:

PP24 UN Nos. 2852, 3364, 3365, 3366, 3367, 3368 and 3369 shall not be carried in quantities of more than 500 g per package.

PP25 For UN No. 1347, the quantity carried shall not exceed 15 kg per package.

PP26 For UN Nos. 1310, 1320, 1321, 1322, 1344, 1347, 1348, 1349, 1517, 2907, 3317 and 3376 packagings shall be lead free.

PP78 UN No. 3370 shall not be carried in quantities of more than 11.5 kg per package.

PP80 For UN No. 2907, packagings shall meet the packing group II performance level. Packagings meeting the test criteria of packing group I shall not be used.

P407	PACKING INSTRUCTION	P407

This instruction applies to UN Nos. 1331, 1944, 1945 and 2254.

The following packagings are authorized, provided that the general provisions of **4.1.1** and **4.1.3** are met:

Combination packagings comprising securely closed inner packagings to prevent accidental ignition under normal conditions of transport. The maximum gross mass of the package shall not exceed 45 kg except for fibreboard boxes which shall not exceed 30 kg.

Additional requirement:

Matches shall be tightly packed.

Special packing provision:

PP27 UN No. 1331, Strike-anywhere matches shall not be packed in the same outer packaging with any other dangerous goods other than safety matches or wax Vesta matches, which shall be packed in separate inner packagings. Inner packagings shall not contain more than 700 strike-anywhere matches.

P408	PACKING INSTRUCTION	P408
This instruction applies to UN No. 3292.		
The following packagings are authorized, provided that the general provisions of **4.1.1** and **4.1.3** are met: (1) For cells: Outer packagings with sufficient cushioning material to prevent contact between cells and between cells and the internal surfaces of the outer packaging and to ensure that no dangerous movement of the cells within the outer packaging occurs during carriage. Packagings shall conform to the packing group II performance level; (2) For batteries: Batteries may be carried unpacked or in protective enclosures (e.g. in fully enclosed or wooden slatted crates). The terminals shall not support the weight of other batteries or materials packed with the batteries.		
Additional requirement: Batteries shall be protected against short circuit and shall be isolated in such a manner as to prevent short circuits.		

P409	PACKING INSTRUCTION	P409
This instruction applies to UN Nos. 2956, 3242 and 3251.		
The following packagings are authorized, provided that the general provisions of **4.1.1** and **4.1.3** are met: (1) Fibre drum (1G) which may be fitted with a liner or coating; maximum net mass: 50 kg; (2) Combination packagings: Fibreboard box (4G) with a single inner plastic bag; maximum net mass: 50 kg; (3) Combination packagings: Fibreboard box (4G) or fibre drum (1G) with plastics inner packagings each containing a maximum of 5 kg; maximum net mass: 25 kg.		

P410	PACKING INSTRUCTION		P410
The following packagings are authorized, provided that the general provisions of **4.1.1** and **4.1.3** are met:			
Combination packagings:			
Inner packagings	**Outer packagings**	**Maximum net mass**	
		Packing group II	**Packing group III**
Glass 10 kg Plastics[a] 30 kg Metal 40 kg Paper[a, b] 10 kg Fibre[a, b] 10 kg [a] *These packagings shall be sift-proof.* [b] *These inner packagings shall not be used when the substances being carried may become liquid during carriage.*	**Drums** steel (1A2) aluminium (1B2) metal other than steel or aluminium (1N2) plastics (1H2) plywood (1D) fibre (1G) [a] **Boxes** steel (4A) aluminium (4B) natural wood (4C1) natural wood with sift-proof walls (4C2) plywood (4D) reconstituted wood (4F) fibreboard (4G)[a] expanded plastics (4H1) solid plastics (4H2) **Jerricans** steel (3A2) aluminium (3B2) plastics (3H2)	400 kg 400 kg 400 kg 400 kg 400 kg 400 kg 400 kg 400 kg 400 kg 400 kg 400 kg 400 kg 400 kg 60 kg 400 kg 120 kg 120 kg 120 kg	400 kg 400 kg 400 kg 400 kg 400 kg 400 kg 400 kg 400 kg 400 kg 400 kg 400 kg 400 kg 400 kg 60 kg 400 kg 120 kg 120 kg 120 kg
Single packagings:			
Drums steel (1A1 or 1A2) aluminium (1B1 or 1B2) metal other than steel or aluminium (1N1 or 1N2) plastics (1H1 or 1H2) **Jerricans** steel (3A1 or 3A2) aluminium (3B1 or 3B2) plastics (3H1 or 3H2)		400 kg 400 kg 400 kg 400 kg 120 kg 120 kg 120 kg	400 kg 400 kg 400 kg 400 kg 120 kg 120 kg 120 kg

(Cont'd on next page)

Single packagings *(cont'd)*:	**Packing group II**	**Packing group III**
Boxes		
steel (4A)[c]	400 kg	400 kg
aluminium (4B)[c]	400 kg	400 kg
natural wood (4C1)[c]	400 kg	400 kg
plywood (4D)[c]	400 kg	400 kg
reconstituted wood (4F)[c]	400 kg	400 kg
natural wood with sift-proof walls (4C2)[c]	400 kg	400 kg
fibreboard (4G)[c]	400 kg	400 kg
solid plastics (4H2)[c]	400 kg	400 kg
Bags		
Bags (5H3, 5H4, 5L3, 5M2)[c, d]	50 kg	50 kg
Composite packagings		
plastics receptacle with outer steel, aluminium, plywood, fibre or plastics drum (6HA1, 6HB1, 6HG1, 6HD1, or 6HH1)	400 kg	400 kg
plastics receptacle with outer steel or aluminium crate or box, or outer wooden, plywood, fibreboard or solid plastics box (6HA2, 6HB2, 6HC, 6HD2, 6HG2 or 6HH2)	75 kg	75 kg
glass receptacle with outer steel, aluminium, plywood or fibre drum (6PA1, 6PB1, 6PD1 or 6PG1) or outer steel or aluminium crate or box or with outer wooden or fibreboard box or with outer wickerwork hamper (6PA2, 6PB2, 6PC, 6PD2, or 6PG2) or with outer solid or expanded plastics packaging (6PH1 or 6PH2)	75 kg	75 kg

[c] *These packagings shall not be used when the substances being carried may become liquid during carriage.*

[d] *These packagings shall only be used for packing group II substances when carried in a closed vehicle or container.*

Special packing provisions:

PP39 For UN No. 1378, for metal packagings a venting device is required.

PP40 For UN Nos. 1326, 1352, 1358, 1395, 1396, 1436, 1437, 1871, 2805 and 3182, packing group II, bags are not allowed.

PP83 For UN No. 2813, waterproof bags containing not more than 20 g of substance for the purposes of heat formation may be packaged for carriage. Each waterproof bag shall be sealed in a plastics bag and placed within an intermediate packaging. No outer packaging shall contain more than 400 g of substance. Water or liquid which may react with the water reactive substance shall not be included in the packaging.

P411	PACKING INSTRUCTION	P411
This instruction applies to UN No. 3270.		
The following packagings are authorized, provided that the general provisions of **4.1.1** and **4.1.3** are met: (1) Fibreboard box with a maximum gross mass of 30 kg; (2) Other packagings, provided that explosion is not possible by reason of increased internal pressure. Maximum net mass shall not exceed 30 kg.		

P500	PACKING INSTRUCTION	P500
This instruction applies to UN No. 3356.		
The general provisions of **4.1.1** and **4.1.3** shall be met. Packagings shall conform to the packing group II performance level. The generator(s) shall be carried in a package which meets the following requirements when one generator in the package is actuated: (a) Other generators in the package will not be actuated; (b) Packaging material will not ignite; and (c) The outside surface temperature of the completed package shall not exceed 100 °C.		

P501	PACKING INSTRUCTION	P501

This instruction applies to UN No. 2015.

The following packagings are authorized, provided that the general provisions of **4.1.1** and **4.1.3** are met:

Combination packagings:	**Inner packaging maximum capacity**	**Outer packaging maximum net mass**
(1) Boxes (4A, 4B, 4C1, 4C2, 4D, 4H2) or drums (1A2, 1B2, 1N2, 1H2, 1D) or jerricans (3A2, 3B2, 3H2) with glass, plastics or metal inner packagings	5 *l*	125 kg
(2) Fibreboard box (4G) or fibre drum (1G), with plastics or metal inner packagings each in a plastics bag	2 *l*	50 kg

Single packagings:	**Maximum capacity**
Drums	250 *l*
steel (1A1)	
aluminium (1B1)	
metal other than steel or aluminium (1N1)	
plastics (1H1)	
Jerricans	60 *l*
steel (3A1)	
aluminium (3B1)	
plastics (3H1)	
Composite packagings	
plastics receptacle with outer steel or aluminium drum (6HA1, 6HB1)	250 *l*
plastics receptacle with outer fibre, plastics or plywood drum (6HG1, 6HH1, 6HD1)	250 *l*
plastics receptacle with outer steel or aluminium crate or box or plastics receptacle with outer wooden, plywood, fibreboard or solid plastics box (6HA2, 6HB2, 6HC, 6HD2, 6HG2 or 6HH2)	60 *l*
glass receptacle with outer steel, aluminium, fibre, plywood, solid plastics or expanded plastics drum (6PA1, 6PB1, 6PG1, 6PD1, 6PH1 or 6PH2) or with outer steel or aluminium crate or box or with outer wooden or fibreboard box or with outer wickerwork hamper (6PA2, 6PB2, 6PC, 6PG2 or 6PD2)	60 *l*

Additional requirements:

1. Packagings shall have a maximum filling degree of 90%.

2. Packagings shall be vented.

P502	PACKING INSTRUCTION	P502

The following packagings are authorized, provided that the general provisions of **4.1.1** and **4.1.3** are met:

Combination packagings:

Inner packagings	Outer packagings	Maximum net mass
	Drums	
Glass 5 *l*	steel (1A2)	125 kg
Metal 5 *l*	aluminium (1B2)	125 kg
Plastics 5 *l*	metal other than steel or aluminium (1N2)	125 kg
	plastics (1H2)	125 kg
	plywood (1D)	125 kg
	fibre (1G)	125 kg
	Boxes	
	steel (4A)	125 kg
	aluminium (4B)	125 kg
	natural wood (4C1)	125 kg
	natural wood with sift-proof walls (4C2)	125 kg
	plywood (4D)	125 kg
	reconstituted wood (4F)	125 kg
	fibreboard (4G)	125 kg
	expanded plastics (4H1)	60 kg
	solid plastics (4H2)	125 kg

Single packagings:	Maximum capacity
Drums	250 *l*
steel (1A1)	
aluminium (1B1)	
plastics (1H1)	
Jerricans	60 *l*
steel (3A1)	
aluminium (3B1)	
plastics (3H1)	
Composite packagings	
plastics receptacle with outer steel or aluminium drum (6HA1, 6HB1)	250 *l*
plastics receptacle with outer fibre, plastics or plywood drum (6HG1, 6HH1, 6HD1)	250 *l*
plastics receptacle with outer steel or aluminium crate or box or plastics receptacle with outer wooden, plywood, fibreboard or solid plastics box (6HA2, 6HB2, 6HC, 6HD2, 6HG2 or 6HH2)	60 *l*
glass receptacle with outer steel, aluminium, fibre, plywood, solid plastics or expanded plastics drum (6PA1, 6PB1, 6PG1, 6PD1, 6PH1 or 6PH2) or with outer steel or aluminium crate or box or with outer wooden or fibreboard box or with outer wickerwork hamper (6PA2, 6PB2, 6PC, 6PG2 or 6PD2)	60 *l*

Special packing provision:

PP28 For UN No. 1873, only glass inner packagings and glass inner receptacles are authorized respectively for combination packagings and composite packagings.

P503	PACKING INSTRUCTION	P503
The following packagings are authorized, provided that the general provisions of **4.1.1** and **4.1.3** are met:		
Combination packagings:		
Inner packagings	**Outer packagings**	**Maximum net mass**
	Drums	
Glass 5 kg	steel (1A2)	125kg
Metal 5 kg	aluminium (1B2)	125kg
Plastics 5 kg	metal other than steel or aluminium (1N2)	125kg
	plastics (1H2)	125kg
	plywood (1D)	125kg
	fibre (1G)	125kg
	Boxes	
	steel (4A)	125 kg
	aluminium (4B)	125 kg
	natural wood (4C1)	125 kg
	natural wood with sift-proof walls (4C2)	125 kg
	plywood (4D)	125 kg
	reconstituted wood (4F)	125 kg
	fibreboard (4G)	40 kg
	expanded plastics (4H1)	60 kg
	solid plastics (4H2)	125 kg
Single packagings:		
Metal drums (1A1, 1A2, 1B1, 1B2, 1N1 or 1N2) with a maximum net mass of 250 kg. Fibreboard (1G) or plywood drums (1D) fitted with inner liners with a maximum net mass of 200 kg.		

P504	PACKING INSTRUCTION	P504

The following packagings are authorized, provided that the general provisions of **4.1.1** and **4.1.3** are met:

Combination packagings:	**Maximum net mass**
(1) Glass receptacles with a maximum capacity of 5 litres in 1A2, 1B2, 1N2, 1H2, 1D, 1G, 4A, 4B, 4C1, 4C2, 4D, 4F, 4G, 4H2 outer packagings	75 kg
(2) Plastics receptacles with a maximum capacity of 30 litres in 1A2, 1B2, 1N2, 1H2, 1D, 1G, 4A, 4B, 4C1, 4C2, 4D, 4F, 4G, 4H2 outer packagings	75 kg
(3) Metal receptacles with a maximum capacity of 40 litres in 1G, 4F or 4G outer packagings	125 kg
(4) Metal receptacles with a maximum capacity of 40 litres in 1A2, 1B2, 1N2, 1H2, 1D, 4A, 4B, 4C1, 4C2, 4D, 4H2 outer packagings	225 kg
Single packagings:	**Maximum capacity**
Drums	
steel, non-removable head (1A1)	250 *l*
steel, removable head (1A2)	250 *l*
aluminium, non-removable head (1B1)	250 *l*
aluminium, removable head (1B2)	250 *l*
metal other than steel or aluminium, non-removable head (1N1)	250 *l*
metal other than steel or aluminium, removable head (1N2)	250 *l*
plastics, non-removable head (1H1)	250 *l*
plastics, removable head (3H2)	250 *l*
Jerricans	
steel, non-removable head (3A1)	60 *l*
steel, removable head (3A2)	60 *l*
aluminium, non-removable head (3B1)	60 *l*
aluminium, removable head (3B2)	60 *l*
plastics, non-removable head (3H1)	60 *l*
plastics, removable head (3H2)	60 *l*
Composite packagings:	
plastics receptacle with outer steel or aluminium drum (6HA1, 6HB1)	250 *l*
plastics receptacle with outer fibre, plastics or plywood drum (6HG1, 6HH1, 6HD1)	120 *l*
plastics receptacle with outer steel or aluminium crate or box or plastics receptacle with outer wooden, plywood, fibreboard or solid plastics box (6HA2, 6HB2, 6HC, 6HD2, 6HG2 or 6HH2)	60 *l*
glass receptacle with outer steel, aluminium, fibre, plywood, solid plastics or expanded plastics drum (6PA1, 6PB1, 6PG1, 6PD1, 6PH1 or 6PH2) or with outer steel or aluminium crate or box or with outer wooden fibreboard box or with outer wickerwork hamper (6PA2, 6PB2, 6PC, 6PG2 or 6PD2)	60 *l*

Special packing provisions:

PP10 For UN No. 2014, 2984 and 3149, the packaging shall be vented.

P520	PACKING INSTRUCTION	P520

This instruction applies to organic peroxides of Class 5.2 and self-reactive substances of Class 4.1

The packagings listed below are authorized provided the general provisions of **4.1.1** and **4.1.3** and special provisions of **4.1.7.1** are met.

The packing methods are designated OP1 to OP8. The packing methods appropriate for the individual currently assigned organic peroxides and self-reactive substances are listed in 4.1.7.1.3, 2.2.41.4 and 2.2.52.4. The quantities specified for each packing method are the maximum quantities authorized per package. The following packagings are authorized:

(1) Combination packagings with outer packagings comprising boxes (4A, 4B, 4C1, 4C2, 4D, 4F, 4G, 4H1 and 4H2), drums (1A2, 1B2, 1G, 1H2 and 1D), jerricans (3A2, 3B2 and 3H2);

(2) Single packagings consisting of drums (1A1, 1A2, 1B1, 1B2, 1G, 1H1, 1H2 and 1D) and jerricans (3A1, 3A2, 3B1, 3B2, 3H1 and 3H2);

(3) Composite packagings with plastics inner receptacles (6HA1, 6HA2, 6HB1, 6HB2, 6HC, 6HD1, 6HD2, 6HG1, 6HG2, 6HH1 and 6HH2).

Maximum quantity per packaging/package [a] for packing methods OP1 to OP8

Packing Method / **Maximum Quantity**	OP1	OP2 [a]	OP3	OP4 [a]	OP5	OP6	OP7	OP8
Maximum mass (kg) for solids and for combination packagings (liquid and solid)	0.5	0.5/10	5	5/25	25	50	50	400 [b]
Maximum contents in litres for liquids [c]	0.5	-	5	-	30	60	60	225 [d]

[a] *If two values are given, the first applies to the maximum net mass per inner packaging and the second to the maximum net mass of the complete package.*

[b] *60 kg for jerricans / 200 kg for boxes and, for solids, 400 kg in combination packagings with outer packagings comprising boxes (4C1, 4C2, 4D, 4F, 4G, 4H1 and 4H2) and with inner packagings of plastics or fibre with a maximum net mass of 25 kg.*

[c] *Viscous substances shall be treated as solids when they do not meet the criteria provided in the definition for "liquids" presented in 1.2.1.*

[d] *60 litres for jerricans.*

Additional requirements:

1. Metal packagings, including inner packagings of combination packagings and outer packagings of combination or composite packagings may only be used for packing methods OP7 and OP8.

2. In combination packagings, glass receptacles may only be used as inner packagings with maximum contents of 0.5 kg for solids or 0.5 litre for liquids.

3. In combination packagings, cushioning materials shall not be readily combustible.

4. The packaging of an organic peroxide or self-reactive substance required to bear an "EXPLOSIVE" subsidiary risk label shall also comply with the provisions given in 4.1.5.10 and 4.1.5.11.

Special packing provisions:

PP21 For certain self-reactive substances of types B or C, UN Nos. 3221, 3222, 3223, 3224, 3231, 3232, 3233 and 3234, a smaller packaging than that allowed by packing methods OP5 or OP6 respectively shall be used (see 4.1.6 and 2.2.41.4).

PP22 UN No. 3241, 2-Bromo-2-nitropropane-1, 3-diol, shall be packed in accordance with packing method OP6.

P600	PACKING INSTRUCTION	P600

This instruction applies to UN Nos. 1700, 2016 and 2017.

The following packagings are authorized, provided the general provisions of **4.1.1** and **4.1.3** are met:

Outer packagings (1A2, 1B2, 1N2, 1H2, 1D, 1G, 4A, 4B, 4C1, 4C2, 4D, 4F, 4G, 4H2) meeting the packing group II performance level. The articles shall be individually packaged and separated from each other using partitions, dividers, inner packagings or cushioning material to prevent inadvertent discharge during normal conditions of carriage.

Maximum net mass: 75 kg

P601	PACKING INSTRUCTION	P601

The following packagings are authorized provided the general provisions of **4.1.1** and **4.1.3** are met and the packagings are hermetically sealed:

(1) Combination packagings consisting of glass inner packagings not exceeding 1 litre in capacity packed with absorbent material sufficient to absorb the entire contents and inert cushioning material placed in metal receptacles which are individually packed in 1A2, 1B2, 1N2, 1H2, 1D, 1G, 4A, 4B, 4C1, 4C2, 4D, 4F, 4G or 4H2 outer packagings with a maximum gross mass of 15 kg. Inner packagings shall not be filled to more than 90% of their capacity. The closure of each inner packaging shall be physically held in place by any means capable of preventing back-off or loosening of the closure by impact or vibration during carriage;

(2) Combination packagings consisting of metal inner packagings or additionally, for UN No. 1744 only, in polyvinylidene fluoride (PVDF) inner packagings, not exceeding 5 litres in capacity individually packed with absorbent material sufficient to absorb the contents and inert cushioning material in 1A2, 1B2, 1N2, 1H2, 1D, 1G, 4A, 4B, 4C1, 4C2, 4D, 4F, 4G or 4H2 outer packagings with a maximum gross mass of 75 kg. Inner packagings shall not be filled to more than 90% of their capacity. The closure of each inner packaging shall be physically held in place by any means capable of preventing back-off or loosening of the closure by impact or vibration during carriage;

(3) Packagings consisting of:

Outer packagings: Steel or plastic drums, removable head (1A2 or 1H2) tested in accordance with the test requirements in 6.1.5 at a mass corresponding to the mass of the assembled package either as a packaging intended to contain inner packagings, or as a single packaging intended to contain solids or liquids, and marked accordingly.;

Inner packagings:

Drums and composite packagings (1A1, 1B1, 1N1, 1H1 or 6HA1) meeting the requirements of Chapter 6.1 for single packagings, subject to the following conditions:

(a) The hydraulic pressure test shall be conducted at a pressure of at least 0.3 MPa (gauge pressure);

(b) The design and production leakproofness tests shall be conducted at a test pressure of 30 kPa;

(c) They shall be isolated from the outer drum by the use of inert shock-mitigating cushioning material which surrounds the inner packaging on all sides;

(d) Their capacity shall not exceed 125 litres; and

(3) *Packagings consisting of: (cont'd)*

(e) Closures shall be of a screw cap type that are:

(i) physically held in place by any means capable of preventing back-off or loosening of the closure by impact or vibration during carriage; and

(ii) provided with a cap seal;

(f) The outer and inner packagings shall be subjected periodically to a leakproofness test according to (b) at intervals of not more than two and a half years;

(g) The complete packaging shall be visually inspected to the satisfaction of the competent authority at least every 3 years;

(h) The outer and inner packaging shall bear in clearly legible and durable characters:

(i) the date (month, year) of the initial test and the latest periodic test and inspection;

(ii) the stamp of the expert who carried out the test and inspection;

(4) Cylinders, tubes and pressure drums, which shall comply with the appropriate requirements of the Table of 4.1.4.4.

Special packing provision:

PP82 For UN No.1744, glass inner packagings with a capacity of not more than 1.3 litres may be used in a permitted outer packaging with a maximum gross mass of 25 kg.

Special packing provision specific to RID and ADR:

RR3 Only receptacles which satisfy one of the special requirements (PR) listed in 4.1.4.4 shall be used.

P602	PACKING INSTRUCTION	P602

The following packagings are authorised provided the general provisions of **4.1.1** and **4.1.3** are met and the packagings are hermetically sealed:

(1) Combination packagings consisting of glass inner packagings packed with absorbent material sufficient to absorb the entire contents and inert cushioning material placed in metal receptacles which are individually packed in 1A2, 1B2, 1N2, 1H2, 1D, 1G, 4A, 4B, 4C1, 4C2, 4D, 4F, 4G or 4H2 outer packagings with a maximum gross mass of 50 kg. Inner packagings shall not be filled to more than 90% of their capacity. The closure of each inner packaging shall be physically held in place by any means capable of preventing back-off or loosening of the closure by impact or vibration during carriage. Inner packagings shall not exceed 1 litre in capacity;

(2) Combination packagings consisting of metal inner packagings individually packed with absorbent material sufficient to absorb the entire contents and inert cushioning material in 1A2, 1B2, 1N2, 1H2, 1D, 1G, 4A, 4B, 4C1, 4C2, 4D, 4F, 4G or 4H2 outer packagings with a maximum gross mass of 75 kg. Inner packagings shall not be filled to more than 90% of their capacity. The closure of each inner packaging shall be physically held in place by any means capable of preventing back-off or loosening of the closure by impact or vibration during carriage. Inner packagings shall not exceed 5 litres in capacity;

(3) Drums and composite packagings (1A1, 1B1, 1N1, 1H1, 6HA1 or 6HH1), subject to the following conditions:

(a) The hydraulic pressure test shall be conducted at a pressure of at least 0.3 MPa (gauge pressure);

(b) The design and production leakproofness tests shall be conducted at a test pressure of 30 kPa; and

(c) Closures shall be of a screw cap type that are:

(i) physically held in place by any means capable of preventing back-off or loosening of the closure by impact or vibration during carriage; and
(ii) provided with a cap seal;

(4) Cylinders, tubes and pressure drums with a minimum test pressure of 1MPa (10 bar) (gauge pressure) conforming to the provisions of packing instruction P200. No cylinder, tube or pressure drum may be equipped with any pressure relief device. Cylinders, tubes and pressure drums shall have their valves protected.

P620	PACKING INSTRUCTION	P620

This instruction applies to UN Nos. 2814 and 2900.

The following packagings are authorized provided the special packing provisions of **4.1.8** are met:

Packagings meeting the requirements of Chapter 6.3 and approved accordingly consisting of:

(a) Inner packagings comprising:

(i) leakproof primary receptacle(s);

(ii) a leakproof secondary packaging;

(iii) other than for solid infectious substances, an absorbent material in sufficient quantity to absorb the entire contents placed between the primary receptacle(s) and the secondary packaging; if multiple primary receptacles are placed in a single secondary packaging, they shall be either individually wrapped or separated so as to prevent contact between them;

(b) A rigid outer packaging of adequate strength for its capacity, mass and intended use. The smallest external dimension shall be not less than 100 mm.

Additional requirements:

1. Inner packagings containing infectious substances shall not be consolidated with inner packagings containing unrelated types of goods. Complete packages may be overpacked in accordance with the provisions of 1.2.1 and 5.1.2; such an overpack may contain dry ice.

2. Other than for exceptional consignments, e.g. whole organs which require special packaging, the following additional requirements shall apply:

(a) Substances consigned at ambient temperatures or at a higher temperature: Primary receptacles shall be of glass, metal or plastics. Positive means of ensuring a leakproof seal shall be provided, e.g. a heat seal, a skirted stopper or a metal crimp seal. If screw caps are used, they shall be secured by positive means, e.g., tape, paraffin sealing tape or manufactured locking closure;

(b) Substances consigned refrigerated or frozen: Ice, dry ice or other refrigerant shall be placed around the secondary packaging(s) or alternatively in an overpack with one or more complete packages marked in accordance with 6.3.1.1. Interior supports shall be provided to secure secondary packaging(s) or packages in position after the ice or dry ice has dissipated. If ice is used, the outer packaging or overpack shall be leakproof. If dry ice is used, the outer packaging or overpack shall permit the release of carbon dioxide gas. The primary receptacle and the secondary packaging shall maintain their integrity at the temperature of the refrigerant used;

(c) Substances consigned in liquid nitrogen: Plastics primary receptacles capable of withstanding very low temperature shall be used. The secondary packaging shall also be capable of withstanding very low temperatures, and in most cases will need to be fitted over the primary receptacle individually. Provisions for the consignment of liquid nitrogen shall also be fulfilled. The primary receptacle and the secondary packaging shall maintain their integrity at the temperature of the liquid nitrogen;

(d) Lyophilised substances may also be carried in primary receptacles that are flame-sealed glass ampoules or rubber-stoppered glass vials fitted with metal seals.

3. Whatever the intended temperature of the consignment, the primary receptacle or the secondary packaging shall be capable of withstanding without leakage an internal pressure producing a pressure differential of not less than 95 kPa and temperatures in the range -40 °C to +55 °C.

P621	PACKING INSTRUCTION	P621

This instruction applies to UN No. 3291.

The following packagings are authorized provided the general provisions of **4.1.1** and **4.1.3** and the special provisions of **4.1.8** are met:

(1) Rigid, leakproof packagings meeting the requirements of Chapter 6.1 for solids, at the packing group II performance level, provided there is sufficient absorbent material to absorb the entire amount of liquid present and the packaging is capable of retaining liquids;

(2) For packages containing larger quantities of liquid, rigid packagings meeting the requirements of Chapter 6.1 at the packing group II performance level for liquids.

Additional requirement:

Packagings intended to contain sharp objects such as broken glass and needles shall be resistant to puncture and retain liquids under the performance test conditions in Chapter 6.1.

P650	PACKING INSTRUCTION	P650

This packing instruction applies to UN No. 3373.

(1) The packaging shall be of good quality, strong enough to withstand the shocks and loadings normally encountered during carriage, including transhipment between vehicles or containers and between vehicles or containers and warehouses as well as any removal from a pallet or overpack for subsequent manual or mechanical handling. Packagings shall be constructed and closed to prevent any loss of contents that might be caused under normal conditions of carriage by vibration or by changes in temperature, humidity or pressure.

(2) The packaging shall consist of three components:

(a) a primary receptacle;

(b) a secondary packaging; and

(c) an outer packaging.

(3) Primary receptacles shall be packed in secondary packagings in such a way that, under normal conditions of carriage, they cannot break, be punctured or leak their contents into the secondary packaging. Secondary packagings shall be secured in outer packagings with suitable cushioning material. Any leakage of the contents shall not compromise the integrity of the cushioning material or of the outer packaging.

(4) For carriage, the mark illustrated below shall be displayed on the external surface of the outer packaging on a background of a contrasting colour and shall be clearly visible and legible. The width of the line shall be at least 2 mm; the letters and numbers shall be at least 6 mm high.

(Cont'd on next page)

(5) The completed package shall be capable of successfully passing the drop test in 6.3.2.5 as specified in 6.3.2.3 and 6.3.2.4 except that the height of the drop shall not be less than 1.2 m.
The smallest external dimension of outer packagings shall be not less than 100 mm.

(6) For liquid substances:

(a) The primary receptacle(s) shall be leakproof;

(b) The secondary packaging shall be leakproof;

(c) If multiple fragile primary receptacles are placed in a single secondary packaging, they shall be either individually wrapped or separated to prevent contact between them;

(d) Absorbent material shall be placed between the primary receptacle(s) and the secondary packaging. The absorbent material shall be in quantity sufficient to absorb the entire contents of the primary receptacle(s) so that any release of the liquid substance will not compromise the integrity of the cushioning material or of the outer packaging;

(e) The primary receptacle or the secondary packaging shall be capable of withstanding, without leakage, an internal pressure of 95 kPa (0.95 bar).

(7) For solid substances:

(a) The primary receptacle(s) shall be siftproof;

(b) The secondary packaging shall be siftproof;

(c) If multiple fragile primary receptacles are placed in a single secondary packaging, they shall be either individually wrapped or separated to prevent contact between them.

(8) Refrigerated or frozen specimens: Ice, dry ice and liquid nitrogen:

(a) When dry ice or liquid nitrogen is used to keep specimens cold, all applicable requirements of ADR shall be met. When used, ice or dry ice shall be placed outside the secondary packagings or in the outer packaging or an overpack. Interior supports shall be provided to secure the secondary packagings in the original position after the ice or dry ice has dissipated. If ice is used, the outside packaging or overpack shall be leakproof. If carbon dioxide, solid (dry ice) is used, the packaging shall be designed and constructed to permit the release of carbon dioxide gas to prevent a build-up of pressure that could rupture the packagings and the package (the outer packaging or the overpack) shall be marked "Carbon dioxide, solid" or "Dry ice"'.

(b) The primary receptacle and the secondary packaging shall maintain their integrity at the temperature of the refrigerant used as well as the temperatures and the pressures which could result if refrigeration were lost.

(9) Infectious substances assigned to UN No. 3373 which are packed and packages which are marked in accordance with this packing instruction are not subject to any other requirement in ADR.

(10) Clear instructions on filling and closing such packages shall be provided by packaging manufacturers and subsequent distributors to the consignor or to the person who prepares the package (e.g. patient) to enable the package to be correctly prepared for carriage.

(11) If any substance has leaked and has been spilled in a vehicle or container, it may not be reused until after it has been thoroughly cleaned and, if necessary, disinfected or decontaminated. Any other goods and articles carried in the same vehicle or container shall be examined for possible contamination.

P800	PACKING INSTRUCTION	P800

This instruction applies to UN Nos. 2809 and 2803.

The following packagings are authorized, provided the general provisions of **4.1.1** and **4.1.3** are met:

(1) Cylinders in accordance with P200; or

(2) Steel flasks or bottles with threaded closures with a capacity not exceeding 2.5 *l*; or

(3) Combination packagings which conform to the following requirements:

(a) Inner packagings shall comprise glass, metal or rigid plastics intended to contain liquids with a maximum net mass of 15 kg each;

(b) The inner packagings shall be packed with sufficient cushioning material to prevent breakage;

(c) Either the inner packagings or the outer packagings shall have inner liners or bags of strong leakproof and puncture-resistant material impervious to the contents and completely surrounding the contents to prevent it from escaping from the package irrespective of its position or orientation;

(d) The following outer packagings and maximum net masses are authorized:

Outer packaging:	**Maximum net mass**
Drums	
steel (1A2)	400 kg
metal other than steel or aluminium (1N2)	400 kg
plastics (1H2)	400 kg
plywood (1D)	400 kg
fibre (1G)	400 kg
Boxes	
steel (4A)	400 kg
natural wood (4C1)	250 kg
natural wood with sift-proof walls (4C2)	250 kg
plywood (4D)	250 kg
reconstituted wood (4F)	125 kg
fibreboard (4G)	125 kg
expanded plastics (4H1)	60 kg
solid plastics (4H2)	125 kg

Special packing provision:

PP41 For UN No. 2803, when it is necessary to carry gallium at low temperatures in order to maintain it in a completely solid state, the above packagings may be overpack ed in a strong, water-resistant outer packaging which contains dry ice or other means of refrigeration. If a refrigerant is used, all of the above materials used in the packaging of gallium shall be chemically and physically resistant to the refrigerant and shall have impact resistance at the low temperatures of the refrigerant employed. If dry ice is used, the outer packaging shall permit the release of carbon dioxide gas.

P801	PACKING INSTRUCTION	P801

This instruction applies to new and used batteries assigned to UN Nos. 2794, 2795 or 3028.

The following packagings are authorized, provided the general provisions of **4.1.1** and **4.1.3** are met:

(1) Rigid outer packagings;

(2) Wooden slatted crates;

(3) Pallets.

Additional requirements:

1. Batteries shall be protected against short circuits.

2. Batteries stacked shall be adequately secured in tiers separated by a layer of non conductive material.

3. Battery terminals shall not support the weight of other superimposed elements.

4. Batteries shall be packaged or secured to prevent inadvertent movement. Any cushioning material used shall be inert.

P801a	PACKING INSTRUCTION	P801a

This instruction applies to used batteries of UN Nos. 2794, 2795, 2800 and 3028.

Stainless steel or solid plastics battery boxes of a capacity of up to 1 m^3 are authorized provided the following provisions are met:

(1) The battery boxes shall be resistant to the corrosive substances contained in the storage batteries;

(2) Under normal conditions of carriage, no corrosive substance shall leak from the battery boxes and no other substance (e.g. water) shall enter the battery boxes. No dangerous residues of corrosive substances contained in the storage batteries shall adhere to the outside of the battery boxes;

(3) The battery boxes shall not be loaded with storage batteries to a height greater than the height of their sides;

(4) No storage battery containing substances or other dangerous goods which may react dangerously with one another shall be placed in a battery box;

(5) The battery boxes shall be either:

(a) covered; or

(b) carried in closed or sheeted vehicles or containers.

P802	PACKING INSTRUCTION	P802

The following packagings are authorized, provided the general provisions of **4.1.1** and **4.1.3** are met:

(1) Combination packagings:
Outer packagings: 1A2, 1B2, 1N2, 1H2, 1D, 4A, 4B, 4C1, 4C2, 4D, 4F, or 4H2;
maximum net mass: 75 kg.
Inner packagings: glass or plastics; maximum capacity: 10 litres;

(2) Combination packagings:
Outer packagings: 1A2, 1B2, 1N2, 1H2, 1D, 1G, 4A, 4B, 4C1, 4C2, 4D, 4F, 4G or 4H2;
maximum net mass: 125 kg.
Inner packagings: metal; maximum capacity: 40 litres;

(3) Composite packagings: Glass receptacle with outer steel, aluminium, plywood or solid plastics drum (6PA1, 6PB1, 6PD1, or 6PH2) or with outer steel or aluminium crate or box or with outer wooden box or with outer wickerwork hamper (6PA2, 6PB2, 6PC or 6PD2); maximum capacity: 60 litres;

(4) Austenitic steel drums (1A1) with a maximum capacity of 250 litres;

(5) Cylinders and pressure drums conforming to the provisions of packing instruction P200.

P803	PACKING INSTRUCTION	P803

This instruction applies to UN No. 2028.

The following packagings are authorized, provided the general provisions of **4.1.1** and **4.1.3** are met:

(1) Drums (1A2, 1B2, 1N2, 1H2, 1D, 1G);

(2) Boxes (4A, 4B, 4C1, 4C2, 4D, 4F, 4G, 4H2).

Maximum net mass: 75 kg.

The articles shall be individually packaged and separated from each other using partitions, dividers, inner packagings or cushioning material to prevent inadvertent discharge during normal conditions of carriage.

P900	PACKING INSTRUCTION	P900

(Reserved)

P901	PACKING INSTRUCTION	P901

This instruction applies to UN No. 3316.

The following packagings are authorized, provided the general provisions of **4.1.1** and **4.1.3** are met:

Packagings conforming to the performance level consistent with the packing group assigned to the kit as a whole (see 3.3.1, special provision 251).
Maximum quantity of dangerous goods per outer packaging: 10 kg.

Additional requirement:

Dangerous goods in kits shall be packed in inner packagings which shall not exceed either 250 ml or 250 g and shall be protected from other materials in the kit.

P902	PACKING INSTRUCTION	P902
This instruction applies to UN No. 3268.		
The following packagings are authorized, provided the general provisions of **4.1.1** and **4.1.3** are met: Packagings conforming to the packing group III performance level. The packagings shall be designed and constructed to prevent movement of the articles and inadvertent operation during normal conditions of carriage. The articles may also be carried unpackaged in dedicated handling devices, vehicles or containers when moved from where they are manufactured to an assembly plant.		
Additional requirement: Any pressure vessel shall be in accordance with the requirements of the competent authority for the substance(s) contained in the pressure vessel(s).		

P903	PACKING INSTRUCTION	P903
This instruction applies to UN Nos. 3090 and 3091.		
The following packagings are authorized, provided the general provisions of **4.1.1** and **4.1.3** are met: Packagings conforming to the packing group II performance level. In addition, batteries with a strong, impact resistant outer casing of a gross mass of 12 kg or more, and assemblies of such batteries, may be packed in strong outer packagings, in protective enclosures (e.g., in fully enclosed or wooden slatted crates) unpackaged or on pallets. Batteries shall be secured to prevent inadvertent movement, and the terminals shall not support the weight of other superimposed elements. When lithium cells and batteries are packed with equipment, they shall be packed in inner fibreboard packagings that meet the requirements for packing group II. When lithium cells and batteries included in Class 9 are contained in equipment, the equipment shall be packed in strong outer packagings in such a manner as to prevent accidental operation during carriage.		
Additional requirement: Batteries shall be protected against short circuit.		

P903a	PACKING INSTRUCTION	P903a
This instruction applies to used cells and batteries of UN Nos. 3090 and 3091.		
The following packagings are authorized, provided the general provisions of **4.1.1** and **4.1.3** are met: Packagings conforming to the packing group II performance level. Non-approved packagings shall, however, be permitted provided that: - they meet the general provisions of 4.1.1 and 4.1.3; - the cells and batteries are packed and stowed so as to prevent any risk of short circuits; - the packages weigh not more than 30 kg.		
Additional requirement: Batteries shall be protected against short circuit.		

P903b	PACKING INSTRUCTION	P903b

This instruction applies to used cells and batteries of UN Nos. 3090 and 3091.

Used lithium cells and batteries, with a gross mass of not more than 250 g collected for disposal, together with other used non-lithium batteries or alone, may be carried, without being individually protected, under the following conditions:

(1) In 1H2 drums or 4H2 boxes conforming to the packing group II performance level for solids;

(2) In collecting trays with a gross mass of less than 30 kg made from non-conducting material meeting the general conditions of 4.1.1.1, 4.1.1.2 and 4.1.1.5 to 4.1.1.8.

Additional requirements:

The empty space in the packaging shall be filled with appropriate cushioning material so as to restrict the relative movements of the batteries during carriage.

Hermetically sealed packagings shall be fitted with a venting device according to 4.1.1.8. The venting device shall be so designed that an overpressure caused by gases does not exceed 10 kPa.

P904	PACKING INSTRUCTION	P904

This instruction applies to UN No. 3245.

The following packagings are authorized, provided the general provisions of **4.1.1** and **4.1.3** are met:

(1) Packagings according to packing instruction P001 or P002 conforming to the packing group III performance level;

(2) Packagings, which need not conform to the packaging test requirements of Part 6, but conforming to the following:

(a) An inner packaging comprising:

(i) a watertight primary receptacle(s);

(ii) a watertight secondary packaging which is leakproof;

(iii) absorbent material placed between the primary receptacle(s) and the secondary packaging. The absorbent material shall be in a quantity sufficient to absorb the entire contents of the primary receptacle(s) so that any release of the liquid substance will not compromise the integrity of the cushioning material or of the outer packaging;

(iv) if multiple fragile primary receptacles are placed in a single secondary packaging they shall be individually wrapped or separated to prevent contact between them;

(b) An outer packaging shall be strong enough for its capacity, mass and intended use, and with a smallest external dimension of at least 100 mm;

Additional requirements:

<u>Dry ice and liquid nitrogen</u>

When carbon dioxide, solid, (dry ice) is used as a refrigerant, the packaging shall be designed and constructed to permit the release of the gaseous carbon dioxide to prevent the build up of pressure that could rupture the packaging.

Substances consigned in liquid nitrogen or dry ice shall be packed in primary receptacles that are capable of withstanding very low temperatures. The secondary packaging shall also be capable of withstanding very low temperatures and, in most cases, will need to be fitted over the primary receptacle individually.

P905	PACKING INSTRUCTION	P905

This instruction applies to UN Nos. 2990 and 3072.

Any suitable packaging is authorized, provided the general provisions of **4.1.1** and **4.1.3** are met, except that packagings need not conform to the requirements of Part 6.

When the life saving appliances are constructed to incorporate or are contained in rigid outer weatherproof casings (such as for lifeboats), they may be carried unpackaged.

Additional requirements:

1. All dangerous substances and articles contained as equipment within the appliances shall be secured to prevent inadvertent movement and in addition:

   (a) Signal devices of Class 1 shall be packed in plastics or fibreboard inner packagings;

   (b) Non-flammable, non-toxic gases shall be contained in cylinders as specified by the competent authority, which may be connected to the appliance;

   (c) Electric storage batteries (Class 8) and lithium batteries (Class 9) shall be disconnected or electrically isolated and secured to prevent any spillage of liquid; and

   (d) Small quantities of other dangerous substances (for example in Classes 3, 4.1 and 5.2) shall be packed in strong inner packagings.

2. Preparation for transport and packaging shall include provisions to prevent any accidental inflation of the appliance.

P906	PACKING INSTRUCTION	P906

This instruction applies to UN Nos. 2315, 3151, 3152 and 3432.

The following packagings are authorized, provided the general provisions of **4.1.1** and **4.1.3** are met:

(1) For liquids and solids containing or contaminated with PCBs or polyhalogenated biphenyls or terphenyls: Packagings in accordance with P001 or P002, as appropriate;

(2) For transformers and condensers and other devices: Leakproof packagings which are capable of containing, in addition to the devices, at least 1.25 times the volume of the liquid PCBs or polyhalogenated biphenyls or terphenyls present in them. There shall be sufficient absorbent material in the packagings to absorb at least 1.1 times the volume of liquid which is contained in the devices. In general, transformers and condensers shall be carried in leakproof metal packagings which are capable of holding, in addition to the transformers and condensers, at least 1.25 times the volume of the liquid present in them.

Notwithstanding the above, liquids and solids not packaged in accordance with P001 and P002 and unpackaged transformers and condensers may be carried in cargo transport units fitted with a leakproof metal tray to a height of at least 800 mm, containing sufficient inert absorbent material to absorb at least 1.1 times the volume of any free liquid.

Additional requirement:

Adequate provisions shall be taken to seal the transformers and condensers to prevent leakage during normal conditions of carriage.

R001	PACKING INSTRUCTION		R001
The following packagings are authorized provided the general provisions of **4.1.1** and **4.1.3** are met:			
Light gauge metal packagings	**Maximum capacity/maximum net mass**		
	Packing group I	**Packing group II**	**Packing group III**
steel, non-removable head (0A1)	Not allowed	40 *l* / 50 kg	40 *l* / 50 kg
steel, removable head (0A2) [a]	Not allowed	40 *l* / 50 kg	40 *l* / 50 kg
[a] *Not allowed for UN No. 1261 NITROMETHANE.*			
***NOTE 1**: This instruction applies to solids and liquids (provided the design type is tested and marked appropriately).* ***NOTE 2**: For Class 3, packing group II, these packagings may be used only for substances with no subsidiary risk and a vapour pressure of not more than 110 kPa at 50 °C and for slightly toxic pesticides.*			

4.1.4.2 *Packing instructions concerning the use of IBCs*

IBC01	**PACKING INSTRUCTION**	**IBC01**
The following IBCs are authorized, provided the general provisions of **4.1.1**, **4.1.2** and **4.1.3** are met: Metal (31A, 31B and 31N).		
Additional requirement: Only liquids with a vapour pressure less than or equal to 110 kPa at 50 °C, or 130 kPa at 55 °C, are authorized.		
Special packing provision specific to RID and ADR: **BB1** For UN No. 3130, the openings of receptacles for this substance shall be tightly closed by means of two devices in series, one of which shall be screwed or secured in an equivalent manner.		

IBC02	**PACKING INSTRUCTION**	**IBC02**
The following IBCs are authorized, provided the general provisions of **4.1.1**, **4.1.2** and **4.1.3** are met: (1) Metal (31A, 31B and 31N); (2) Rigid plastics (31H1 and 31H2); (3) Composite (31HZ1).		
Additional requirement: Only liquids with a vapour pressure less than or equal to 110 kPa at 50 °C, or 130 kPa at 55 °C, are authorized.		
Special packing provisions: **B5** For UN Nos. 1791, 2014, 2984 and 3149, IBCs shall be provided with a device to allow venting during carriage. The inlet to the venting device shall be sited in the vapour space of the IBC under maximum filling conditions during carriage. **B7** For UN Nos. 1222 and 1865, IBCs with a capacity greater than 450 litres are not permitted due to the substance's potential for explosion when carried in large volumes. **B8** The pure form of this substance shall not be transported in IBCs since it is known to have a vapour pressure of more than 110 kPa at 50 °C or 130 kPa at 55 °C.		

IBC03	PACKING INSTRUCTION	IBC03
The following IBCs are authorized, provided the general provisions of **4.1.1**, **4.1.2** and **4.1.3** are met: (1) Metal (31A, 31B and 31N); (2) Rigid plastics (31H1 and 31H2); (3) Composite (31HZ1, 31HA2, 31HB2, 31HN2, 31HD2 and 31HH2).		
Additional requirement: Only liquids with a vapour pressure less than or equal to 110 kPa at 50 °C, or 130 kPa at 55 °C, are authorized.		
Special packing provision: **B8** The pure form of this substance shall not be carried in IBCs since it is known to have a vapour pressure of more than 110 kPa at 50 °C or 130 kPa at 55 °C.		

IBC04	PACKING INSTRUCTION	IBC04
The following IBCs are authorized, provided the general provisions of **4.1.1**, **4.1.2** and **4.1.3** are met: Metal (11A, 11B, 11N, 21A, 21B, 21N, 31A, 31B and 31N).		

IBC05	PACKING INSTRUCTION	IBC05
The following IBCs are authorized, provided the general provisions of **4.1.1**, **4.1.2** and **4.1.3** are met: (1) Metal (11A, 11B, 11N, 21A, 21B, 21N, 31A, 31B and 31N); (2) Rigid plastics (11H1, 11H2, 21H1, 21H2, 31H1 and 31H2); (3) Composite (11HZ1, 21HZ1 and 31HZ1).		

IBC06	PACKING INSTRUCTION	IBC06
The following IBCs are authorized, provided the general provisions of **4.1.1**, **4.1.2** and **4.1.3** are met: (1) Metal (11A, 11B, 11N, 21A, 21B, 21N, 31A, 31B and 31N); (2) Rigid plastics (11H1, 11H2, 21H1, 21H2, 31H1 and 31H2); (3) Composite (11HZ1, 11HZ2, 21HZ1, 21HZ2, 31HZ1 and 31HZ2).		
Additional requirement: Composite IBCs 11HZ2 and 21HZ2 shall not be used when the substances being carried may become liquid during carriage.		
Special packing provisions: **B12** For UN No. 2907, IBCs shall meet the packing group II performance level. IBCs meeting the test criteria of packing group I shall not be used.		

IBC07	PACKING INSTRUCTION	IBC07

The following IBCs are authorized, provided the general provisions of **4.1.1**, **4.1.2** and **4.1.3** are met:

(1) Metal (11A, 11B, 11N, 21A, 21B, 21N, 31A, 31B and 31N);

(2) Rigid plastics (11H1, 11H2, 21H1, 21H2, 31H1 and 31H2);

(3) Composite (11HZ1, 11HZ2, 21HZ1, 21HZ2, 31HZ1 and 31HZ2);

(4) Wooden (11C, 11D and 11F).

Additional requirement:

Liners of wooden IBCs shall be sift-proof.

IBC08	PACKING INSTRUCTION	IBC08

The following IBCs are authorized, provided the general provisions of **4.1.1**, **4.1.2** and **4.1.3** are met:

(1) Metal (11A, 11B, 11N, 21A, 21B, 21N, 31A, 31B and 31N);

(2) Rigid plastics (11H1, 11H2, 21H1, 21H2, 31H1 and 31H2);

(3) Composite (11HZ1, 11HZ2, 21HZ1, 21HZ2, 31HZ1 and 31HZ2);

(4) Fibreboard (11G);

(5) Wooden (11C, 11D and 11F);

(6) Flexible (13H1, 13H2, 13H3, 13H4, 13H5, 13L1, 13L2, 13L3, 13L4, 13M1 and 13M2).

Special packing provisions:

B3 Flexible IBCs shall be sift-proof and water-resistant or shall be fitted with a sift-proof and water-restistant liner.

B4 Flexible, fibreboard or wooden IBCs shall be sift-proof and water-resistant or shall be fitted with a sift-proof and water-resistant liner.

B6 For UN Nos. 1363, 1364, 1365, 1386, 1408, 1841, 2211, 2217, 2793 and 3314, IBCs are not required to meet the IBC testing requirements of Chapter 6.5.

B13 ***Note:*** *For UN Nos. 1748, 2208 and 2880, carriage by sea in IBCs is prohibited according to the IMDG Code.*

IBC99	PACKING INSTRUCTION	IBC99

Only IBCs which are approved by the competent authority may be used.

IBC100	PACKING INSTRUCTION	IBC100

This instruction applies to UN Nos. 0082, 0241, 0331 and 0332.

The following IBCs are authorized, provided the general provisions of **4.1.1**, **4.1.2** and **4.1.3** and special provisions of 4.1.5 are met:

(1) Metal (11A, 11B, 11N, 21A, 21B, 21N, 31A, 31B and 31N);

(2) Flexible (13H2, 13H3, 13H4, 13L2, 13L3, 13L4 and 13M2);

(3) Rigid plastics (11H1, 11H2, 21H1, 21H2, 31H1 and 31H2);

(4) Composite (11HZ1, 11HZ2, 21HZ1, 21HZ2, 31HZ1 and 31HZ2).

Additional requirements:

1. IBCs shall only be used for free flowing substances.

2. Flexible IBCs shall only be used for solids.

Special packing provisions:

B9 For UN No. 0082, this packing instruction may only be used when the substances are mixtures of ammonium nitrate or other inorganic nitrates with other combustible substances which are not explosive ingredients. Such explosives shall not contain nitroglycerin, similar liquid organic nitrates, or chlorates. Metal IBCs are not authorized.

B10 For UN No. 0241, this packing instruction may only be used for substances which consist of water as an essential ingredient and high proportions of ammonium nitrate or other oxidizing substances some or all of which are in solution. The other constituents may include hydrocarbons or aluminium powder, but shall not include nitro-derivatives such as trinitrotoluene. Metal IBCs are not authorized.

IBC520	PACKING INSTRUCTION				IBC520
This instruction applies to organic peroxides and self-reactive substances of type F.					
The IBCs listed below are authorized for the formulations listed, provided the general provisions of **4.1.1**, **4.1.2** and **4.1.3** and special provisions of **4.1.7.2** are met. For formulations not listed below, only IBCs which are approved by the competent authority may be used (see 4.1.7.2.2).					
UN No.	**Organic peroxide**	**Type of IBC**	**Maximum quantity (litres)**	**Control Tempe-rature**	**Emer-gency Tempera-ture**
3109	**ORGANIC PEROXIDE, TYPE F, LIQUID** tert-Butyl hydroperoxide, not more than 72% with water	31A	1 250		
	tert-Butyl peroxyacetate, not more than 32% in diluent type A	31A 31HA1	1 250 1 000		
	tert-Butyl peroxy-3,5,5-trimethylhexanoate, not more than 32% in diluent type A	31A 31HA1	1 250 1 000		
	Cumyl hydroperoxide, not more than 90% in diluent type A	31HA1	1 250		
	Dibenzoyl peroxide, not more than 42% as a stable dispersion in water	31H1	1 000		
	Di-tert-butyl peroxide, not more than 52% in diluent type A	31A 31HA1	1 250 1 000		
	1,1-Di-(tert-butylperoxy) cyclohexane, not more than 42% in diluent type A	31H1	1 000		
	Dilauroyl peroxide, not more than 42%, stable dispersion, in water	31HA1	1 000		
	Isopropyl cumyl hydroperoxide, not more than 72% in diluent type A	31HA1	1 250		
	p-Menthyl hydroperoxide, not more than 72% in diluent type A	31HA1	1 250		
	Peroxyacetic acid, stabilized, not more than 17%	31A 31H1 31HA1	1 500 1 500 1 500		
3110	**ORGANIC PEROXIDE, TYPE F, SOLID** Dicumyl peroxide	31A 31H1 31HA1	2000		
3119	**ORGANIC PEROXIDE, TYPE F, LIQUID, TEMPERATURE CONTROLLED** tert-Butyl peroxy-2-ethylhexanoate, not more than 32% in diluent type B	31HA1 31A	1 000 1 250	+30 °C +30 °C	+35 °C +35 °C
	tert-Butyl peroxyneodecanoate, not more than 32% in diluent type A	31A	1 250	0 °C	+10 °C
	tert-Butyl peroxyneodecanoate, not more than 42% stable dispersion, in water	31A	1 250	- 5 °C	+ 5 °C
	tert-Butyl peroxypivalate, not more than 27% in diluent type B	31HA1 31A	1 000 1 250	+10 °C +10 °C	+15 °C +15 °C
	Cumyl peroxyneodecanoate, not more than 52%, stable dispersion, in water	31A	1 250	-15 °C	- 5 °C
	Di-(4-tert-butylcyclohexyl) peroxydicarbonate, not more than 42%, stable dispersion, in water	31HA1	1 000	+30 °C	+35 °C
	Dicetyl peroxydicarbonate, not more than 42%, stable dispersion, in water	31HA1	1 000	+30 °C	+35 °C

IBC520	PACKING INSTRUCTION *(cont'd)*				IBC520
UN No.	**Organic peroxide**	**Type of IBC**	**Maximum quantity (litres)**	**Control Tempe-rature**	**Emer-gency Tempera-ture**
3119 *(cont'd)*	Di-(2-ethylhexyl) peroxydicarbonate, not more than 52%, stable dispersion, in water	31A	1 250	-20 °C	-10 °C
	Dimyristyl peroxydicarbonate, not more than 42%, stable dispersion, in water	31HA1	1 000	+15 °C	+20 °C
	Di-(3,5,5-trimethylhexanoyl) peroxide, not more than 38% in diluent type A	31HA1 31A	1 000 1 250	+10 °C +10 °C	+15 °C +15 °C
	Di-(3,5,5-trimethylhexanoyl) peroxide, not more than 52%, stable dispersion, in water	31A	1 250	+10 °C	+15 °C
	1,1,3,3-Tetramethylbutyl peroxyneodecanoate, not more than 52%, stable dispersion, in water	31A	1 250	- 5 °C	+ 5 °C
	Dicyclohexylperoxydicarbonate, not more than 42% as a stable dispersion, in water	31A	1 250	+10 °C	+15 °C
3120	**ORGANIC PEROXIDE, TYPE F, SOLID, TEMPERATURE CONTROLLED** No formulation listed				

Additional requirements:

1. IBCs shall be provided with a device to allow venting during carriage. The inlet to the pressure-relief device shall be sited in the vapour space of the IBC under maximum filling conditions during carriage.

2. To prevent explosive rupture of metal IBCs or composite IBCs with complete metal casing, the emergency-relief devices shall be designed to vent all the decomposition products and vapours evolved during self-accelerating decomposition or during a period of not less than one hour of fire-engulfment as calculated by the formula in 4.2.1.13.8. The control and emergency temperatures specified in this packing instruction are based on a non-insulated IBC. When consigning an organic peroxide in an IBC in accordance with this instruction, it is the responsibility of the consignor to ensure that:

   (a) the pressure and emergency relief devices installed on the IBC are designed to take appropriate account of the self-accelerating decomposition of the organic peroxide and of fire-engulfment; and
   (b) when applicable, the control and emergency temperatures indicated are appropriate, taking into account the design (e.g. insulation) of the IBC to be used.

IBC620	PACKING INSTRUCTION	IBC620

This instruction applies to UN No. 3291.

The following IBCs are authorized, provided the general provisions of **4.1.1**, **4.1.2** and **4.1.3** and the special provisions of **4.1.8** are met:
Rigid, leakproof IBCs conforming to the packing group II performance level.

Additional requirements:

1. There shall be sufficient absorbent material to absorb the entire amount of liquid present in the IBC.
2. IBCs shall be capable of retaining liquids.
3. IBCs intended to contain sharp objects such as broken glass and needles shall be resistant to puncture.

4.1.4.3 *Packing instructions concerning the use of large packagings*

LP01	**PACKING INSTRUCTION (LIQUIDS)**			**LP01**
The following large packagings are authorized provided the general provision of **4.1.1** and **4.1.3** are met:				
Inner packagings	**Large outer packagings**	**Packing group I**	**Packing group II**	**Packing group III**
Glass 10 litre Plastics 30 litre Metal 40 litre	Steel (50A) Aluminium (50B) Metal other than steel or aluminium (50N) Rigid plastics (50H) Natural wood (50C) Plywood (50D) Reconstituted wood (50F) Fibreboard (50G)	Not allowed	Not allowed	Maximum capacity: 3 m^3

LP02	**PACKING INSTRUCTION (SOLIDS)**			**LP02**
The following large packagings are authorized provided the general provisions of **4.1.1** and **4.1.3** are met:				
Inner packagings	**Large outer packagings**	**Packing group I**	**Packing group II**	**Packing group III**
Glass 10kg Plastics[b] 50kg Metal 50 kg Paper[a, b] 50 kg Fibre[a, b] 50 kg	Steel (50A) Aluminium (50B) Metal other than steel or aluminium (50N) Rigid plastics (50H) Natural wood (50C) Plywood (50D) Reconstituted wood (50F) Fibreboard (50G) Flexible plastics (51H) [c]	Not allowed	Not allowed	Maximum capacity: 3 m^3

[a] *These inner packagings shall not be used when the substances being carried may become liquid during carriage.*

[b] *These inner packagings shall be sift-proof.*

[c] *To be used with flexible inner packagings only.*

LP99	**PACKING INSTRUCTION**	**LP99**
Only large packagings which are approved by the competent authority may be used (see 4.1.3.7).		

LP101	PACKING INSTRUCTION	LP101
The following packagings are authorized, provided the general provisions of **4.1.1** and **4.1.3** and special provisions of 4.1.5 are met:		
Inner packagings	**Intermediate packagings**	**Large packagings**
Not necessary	Not necessary	Steel (50A) Aluminium (50B) Metal other than steel or aluminium (50N) Rigid plastics (50H) Natural wood (50C) Plywood (50D) Reconstituted wood (50F) Fibreboard (50G)
Special packing provision: **L1** For UN Nos. 0006, 0009, 0010, 0015, 0016, 0018, 0019, 0034, 0035, 0038, 0039, 0048, 0056, 0137, 0138, 0168, 0169, 0171, 0181, 0182, 0183, 0186, 0221, 0243, 0244, 0245, 0246, 0254, 0280, 0281, 0286, 0287, 0297, 0299, 0300, 0301, 0303, 0321, 0328, 0329, 0344, 0345, 0346, 0347, 0362, 0363, 0370, 0412, 0424, 0425, 0434, 0435, 0436, 0437, 0438, 0451, 0488 and 0502: Large and robust explosives articles, normally intended for military use, without their means of initiation or with their means of initiation containing at least two effective protective features, may be carried unpackaged. When such articles have propelling charges or are self-propelled, their ignition systems shall be protected against stimuli encountered during normal conditions of carriage. A negative result in Test Series 4 on an unpackaged article indicates that the article can be considered for carriage unpackaged. Such unpackaged articles may be fixed to cradles or contained in crates or other suitable handling devices.		

LP102	PACKING INSTRUCTION	LP102
The following packagings are authorized, provided the general provisions of **4.1.1** and **4.1.3** and special provisions of **4.1.5** are met:		
Inner packagings	**Intermediate packagings**	**Outer packagings**
Bags water resistant **Receptacles** fibreboard metal plastics wood **Sheets** fibreboard, corrugated **Tubes** fibreboard	Not necessary	Steel (50A) Aluminium (50B) Metal other than steel or aluminium (50N) Rigid plastics (50H) Natural wood (50C) Plywood (50D) Reconstituted wood (50F) Fibreboard (50G)

LP621	PACKING INSTRUCTION	LP621
This instruction applies to UN No. 3291.		
The following large packagings are authorized, provided the general provisions of **4.1.1** and **4.1.3** and the special provisions of **4.1.8** are met: (1) For clinical waste placed in inner packagings: Rigid, leakproof large packagings conforming to the requirements of Chapter 6.6 for solids, at the packing group II performance level, provided there is sufficient absorbent material to absorb the entire amount of liquid present and the large packaging is capable of retaining liquids; (2) For packages containing larger quantities of liquid: Large rigid packagings conforming to the requirements of Chapter 6.6, at the packing group II performance level, for liquids.		
Additional requirement: Large packagings intended to contain sharp objects such as broken glass and needles shall be resistant to puncture and retain liquids under the performance test conditions in Chapter 6.6.		

LP902	PACKING INSTRUCTION	LP902
This instruction applies to UN No. 3268.		
The following packagings are authorized, provided the general provisions of **4.1.1** and **4.1.3** are met: Packagings conforming to the packing group III performance level. The packagings shall be designed and constructed to prevent movement of the articles and inadvertent operation during normal conditions of carriage. The articles may also be carried unpackaged in dedicated handling devices, vehicles, or containers when moved from where they are manufactured to an assembly plant.		
Additional requirement: Any pressure vessel shall be in accordance with the requirements of the competent authority for the substance(s) contained in the pressure vessel(s).		

4.1.4.4 ***Particular requirements applicable to the use of pressure receptacles for substances other than those of Class 2***

When cylinders, tubes or pressure drums are used as packaging for substances assigned to packing instructions P400, P401, P402 or P601, they shall be constructed, tested, filled and marked according to the corresponding requirements (PR1 to PR7) as mentioned in the table below for each UN number.

TABLE

LIST OF PARTICULAR REQUIREMENTS (PR)
FOR GAS CYLINDERS AND RECEPTACLES

Requirement code	UN Nos.	Applicable construction, testing, filling and marking requirements
PR1	1366 1370 1380 1389 1391 1411 1421 1928 2003 2445 2845 2870 3051 3052 3053 3076 3129 3130 3148 3194 3254	The substances classified under these UN numbers shall be packed in hermetically closing metal receptacles which are not affected by the contents and have a capacity of not more than 450 litres. The receptacles shall be subjected to the initial test and periodic tests every five years at a pressure of not less than 1MPa (10 bar) (gauge pressure). The receptacles shall not be filled to more than 90% of their capacity; however, a space of at least 5% shall remain empty for safety when the liquid is at an average temperature of 50 °C. During carriage, the liquid shall be under a layer of inert gas the gauge pressure of which shall be not less than 50 kPa (0.5 bar). The receptacles shall carry a data plate with the following particulars entered in a durable form: - substance or substances [a] accepted for carriage; - tare [b] of the receptacle, including accessories; - test pressure [b] (gauge pressure); - date (month, year) of the last test undergone; - stamp of the expert who carried out the test; - capacity [b] of the receptacle; - maximum mass of filling allowed [b]

[a] *The name may be replaced by a generic description covering substances of a similar nature and also compatible with the characteristics of the receptacle.*

[b] *The units of measurement to be added each time after the numerical values.*

Requirement code	UN Nos.	Applicable construction, testing, filling and marking requirements
PR2	1183 1242 1295 2988	The substances classified under these UN number shall be packed in corrosion-resistant steel receptacles with a maximum capacity of 450 litres. The closing device of the receptacle shall be protected by a cap. The receptacles shall be subjected to the initial test and periodic tests every five years at a pressure of not less than 0.4 MPa (4 bar) (gauge pressure). The maximum permissible mass of filling per litre of capacity for trichlorosilane, ethyldichlorosilane and methyldichlorosilane shall not exceed 1.14 kg, 0.93 kg or 0.95 kg respectively, if the filling is carried out by mass; if the filling is by volume, the degree of filling shall not exceed 85%. The receptacles shall also carry a plate showing the following particulars in a durable form: - description of the substance(s) accepted for carriage, or for chlorosilanes : "chlorosilanes, Class 4.3"; - tare[b] of the receptacle, including accessories; - test pressure[b] (gauge pressure); - date (month, year) of the last test undergone; - stamp of the expert who carried out the test; - capacity[b] of the receptacle; - maximum degree of filling allowed by mass[b] for each substance accepted for carriage.

[b] *The units of measurement to be added each time after the numerical values.*

Requirement code	UN Nos.	Applicable construction, testing, filling and marking requirements
PR3	1092 1251 1259 1605 1613 1994 3294	The substances classified under these UN numbers shall be packed in metal receptacles fitted with completely leakproof closing devices which shall, if necessary, be secured against mechanical damage by protective caps. Steel receptacles of a capacity not exceeding 150 litres shall have a minimum wall thickness of 3 mm, and larger steel receptacles and receptacles made of other materials shall have walls at least thick enough to guarantee equivalent mechanical strength. The maximum capacity of receptacles permitted shall be 250 litres. The mass of the contents shall be not more than 1 kg of liquid per litre of capacity. Before being used for the first time, the receptacles shall undergo a hydraulic pressure test at a pressure of not less than 1 MPa (10 bar) (gauge pressure). The pressure test shall be repeated every five years and shall include a meticulous inspection of the inside of the receptacle and a check of the tare. The receptacles shall bear the following particulars in clearly legible and durable characters: - substance or substances [a] accepted for carriage; - the name of the owner of the receptacle; - the tare [b] of the receptacle, including such fittings and accessories as valves, protective caps, etc; - the date (month, year) of the initial test and of the most recent test, and the stamp of the expert who carried out the test; - the maximum permissible mass of the contents of the receptacle in kg; - the internal pressure (test pressure) to be applied in the hydraulic pressure test.

[a] *The name may be replaced by a generic description covering substances of a similar nature and also compatible with the characteristics of the receptacle.*

[b] *The units of measurement to be added each time after the numerical values.*

Requirement code	UN Nos.	Applicable construction, testing, filling and marking requirements
PR4	1185	This substance shall be packed in steel receptacles of sufficient thickness, which shall be closed by a screw-threaded bung and a screw-threaded protective cap or equivalent device leakproof both to liquid and to vapour. The receptacles shall initially and periodically, at least every five years, be tested at a pressure of at least 1 MPa (10 bar) (gauge pressure) in accordance with 6.2.1.5 and 6.2.1.6. The mass of the contents shall not exceed 0.67 kg per litre of capacity. A package shall not weigh more than 75 kg. Receptacles shall bear, in clearly legible and durable characters: - the name or mark of the manufacturer and the number of the receptacle; - the word "ethyleneimine"; - the tare [b] of the receptacle and its maximum permitted mass[b] when filled; - the date (month and year) of the initial test and of the most recent test undergone; - the stamp of the expert who carried out the tests and examinations.

[b] *The units of measurement to be added each time after the numerical values.*

Requirement code	UN Nos.	Applicable construction, testing, filling and marking requirements
PR5	2480 2481	The substances classified under this UN number shall be packed in receptacles made of pure aluminium having a wall thickness of not less than 5 mm or in receptacles of stainless steel. The receptacles shall be fully welded. They shall initially and periodically, at least every five years, be tested at a pressure of at least 0.5 MPa (5 bar) (gauge pressure) in accordance with 6.2.1.5 and 6.2.1.6. They shall be so closed as to be leakproof by means of two closures one above the other, one of which shall be screw-threaded or secured in an equally effective manner. The degree of filling shall be not more than 90%. Drums weighing more than 100 kg shall be fitted with rolling hoops or stiffening ribs. The receptacles shall bear, in clearly legible and durable characters: - the name or mark of the manufacturer and the number of the receptacle; - substance or substances [a] accepted for carriage; - the tare [b] of the receptacle and its maximum permitted mass when filled; - the date (month and year) of the initial test and of the most recent test undergone; - the stamp of the expert who carried out the tests and examinations.

[a] *The name may be replaced by a generic description covering substances of a similar nature and also compatible with the characteristics of the receptacle.*

[b] *The units of measurement to be added each time after the numerical values.*

Requirement code	UN Nos.	Applicable construction, testing, filling and marking requirements
PR6	1744	Bromine containing less than 0.005% water, or between 0.005% and 0.2% water, provided that in the latter case measures are taken to prevent corrosion of the lining of the receptacles, may be carried in receptacles satisfying the following conditions: (a) The receptacles shall be made of steel and be equipped with a leakproof lining made of lead or of some other material affording equivalent protection and with a hermetic closure; receptacles made of monel metal or nickel, or with a nickel lining, shall also be permitted; (b) The capacity of the receptacles shall not exceed 450 litres; (c) The receptacles shall not be filled to more than 92% of their capacity or more than 2.86 kg per litre of capacity; (d) The receptacles shall be welded and designed for a calculation pressure of not less than 2.1 MPa (21 bar) gauge pressure. The materials and workmanship shall in other respects meet the relevant requirements of Chapter 6.2. The initial test of unlined steel receptacles shall be subject to the requirements of 6.2.1.5; (e) The closures shall project as little as possible from the receptacle and be fitted with protective caps. The closures and caps shall be fitted with gaskets made of a material not capable of being attacked by bromine. The closures shall be in the upper part of the receptacles in such a manner that they can in no case be in permanent contact with the liquid phase; (f) The receptacles shall be provided with fittings enabling them to stand stably upright, and with lifting attachments (rings, flanges, etc.) at the top, which shall be tested at twice the working load. Before being put into service, the receptacles shall be subjected to a leakproofness test at a pressure of at least 200 kPa (2 bar) gauge pressure. The leakproofness test shall be repeated every two years and shall be accompanied by an internal inspection of the receptacle and a check of its tare. The test and the inspection shall be carried out under the supervision of an expert approved by the competent authority. The receptacles shall bear, in clearly legible and durable characters: - the name or the mark of the manufacturer and the number of the receptacle, - the word "Bromine", - tare [b] mass of the receptacle and the permissible maximum mass [b] of the filled receptacle, - date (month, year) of the initial test and of the latest periodical test, - stamp of the expert who carried out the tests and examinations.

[b] *The units of measurement to be added each time after the numerical values.*

Requirement code	UN No.	Applicable construction, testing, filling and marking requirements
PR7	1614	Liquid hydrogen cyanide, stabilized, when completely absorbed by an inert porous material, shall be packed in metal receptacles of a capacity of not more than 7.5 litres, placed in wooden cases in such a manner that they cannot come into contact with one another. Such combination packagings shall comply with the following conditions: (1) the receptacles shall be tested at a pressure of not less than 0.6 MPa (6 bar) (gauge pressure); (2) the receptacles shall be entirely filled with the porous material which shall not shake down or form dangerous spaces even after prolonged use or under impact, even at temperatures of up to 50 °C; (3) the date of filling shall be durably marked on the lid of each receptacle; (4) combination packagings shall be tested and approved, in accordance with 6.1.4.21 for packing group I; (5) a package shall not weigh more than 120 kg.

4.1.5 Special packing provisions for goods of Class 1

4.1.5.1 The general provisions of Section 4.1.1 shall be met.

4.1.5.2 All packagings for Class 1 goods shall be so designed and constructed that:

(a) They will protect the explosives, prevent them escaping and cause no increase in the risk of unintended ignition or initiation when subjected to normal conditions of carriage including foreseeable changes in temperature, humidity and pressure;

(b) The complete package can be handled safely in normal conditions of carriage; and

(c) The packages will withstand any loading imposed on them by foreseeable stacking to which they will be subject during carriage so that they do not add to the risk presented by the explosives, the containment function of the packagings is not harmed, and they are not distorted in a way or to an extent which will reduce their strength or cause instability of a stack.

4.1.5.3 All explosive substances and articles, as prepared for carriage, shall have been classified in accordance with the procedures detailed in 2.2.1.

4.1.5.4 Class 1 goods shall be packed in accordance with the appropriate packing instruction shown in Column (8) of Table A of Chapter 3.2, as detailed in 4.1.4.

4.1.5.5 Packagings, including IBCs and large packagings shall conform to the requirements of Chapter 6.1, 6.5 or 6.6, respectively, and shall meet the test requirements of 6.1.5, 6.5.4 or 6.6.5, respectively, for packing group II, subject to 4.1.1.13, 6.1.2.4 and 6.5.1.4.4. Packagings other than metal packagings meeting the test criteria of packing group I may be used. To avoid unnecessary confinement, metal packagings of packing group I shall not be used.

4.1.5.6 The closure device of packagings containing liquid explosives shall ensure a double protection against leakage.

4.1.5.7 The closure device of metal drums shall include a suitable gasket; if a closure device includes a screw-thread, the ingress of explosive substances into the screw-thread shall be prevented.

4.1.5.8 Packagings for water soluble substances shall be water resistant. Packagings for desensitized or phlegmatized substances shall be closed to prevent changes in concentration during carriage.

4.1.5.9 When the packaging includes a double envelope filled with water which may freeze during transport, a sufficient quantity of an anti-freeze agent shall be added to the water to prevent freezing. Anti-freeze that could create a fire hazard because of its inherent flammability shall not be used.

4.1.5.10 Nails, staples and other closure devices made of metal without protective covering shall not penetrate to the inside of the outer packaging unless the inner packaging adequately protects the explosives against contact with the metal.

4.1.5.11 Inner packagings, fittings and cushioning materials and the placing of explosive substances or articles in packages shall be accomplished in a manner which prevents the explosive substances or articles from becoming loose in the outer packaging under normal conditions of carriage. Metallic components of articles shall be prevented from making contact with metal packagings. Articles containing explosive substances not enclosed in an outer casing shall be separated from each other in order to prevent friction and impact. Padding, trays, partitioning in the inner or outer packaging, mouldings or receptacles may be used for this purpose.

4.1.5.12 Packagings shall be made of materials compatible with, and impermeable to, the explosives contained in the package, so that neither interaction between the explosives and the packaging materials, nor leakage, causes the explosive to become unsafe to carriage, or the hazard division or compatibility group to change.

4.1.5.13 The ingress of explosive substances into the recesses of seamed metal packagings shall be prevented.

4.1.5.14 Plastics packagings shall not be liable to generate or accumulate sufficient static electricity so that a discharge could cause the packaged explosive substances or articles to initiate, ignite or function.

4.1.5.15 Large and robust explosives articles, normally intended for military use, without their means of initiation or with their means of initiation containing at least two effective protective features, may be carried unpackaged. When such articles have propelling charges or are self-propelled, their ignition systems shall be protected against stimuli encountered during normal conditions of carriage. A negative result in Test Series 4 on an unpackaged article indicates that the article can be considered for carriage unpackaged. Such unpackaged articles may be fixed to cradles or contained in crates or other suitable handling, storage or launching devices in such a way that they will not become loose during normal conditions of carriage.

Where such large explosive articles are as part of their operational safety and suitability tests subjected to test regimes that meet the intentions of ADR and such tests have been successfully undertaken, the competent authority may approve such articles to be carried in accordance with ADR.

4.1.5.16 Explosive substances shall not be packed in inner or outer packagings where the differences in internal and external pressures, due to thermal or other effects, could cause an explosion or rupture of the package.

4.1.5.17 Whenever loose explosive substances or the explosive substance of an uncased or partly cased article may come into contact with the inner surface of metal packagings (1A2, 1B2, 4A, 4B and metal receptacles), the metal packaging shall be provided with an inner liner or coating (see 4.1.1.2).

4.1.5.18 Packing instruction P101 may be used for any explosive provided the packaging has been approved by a competent authority regardless of whether the packaging complies with the packing instruction assignment in Column (8) of Table A of Chapter 3.2.

4.1.6 Special packing provisions for goods of Class 2 and goods of other classes assigned to packing instruction P200

NOTE: *For goods of other classes carried in pressure receptacles and assigned to packing instructions PR1 to PR7, see 4.1.4.4.*

4.1.6.1 This section provides general requirements applicable to the use of pressure receptacles and open cryogenic receptacles for the carriage of Class 2 substances and goods of other classes assigned to packing instruction P200 (e.g. UN 1051 hydrogen cyanide, stabilized). Pressure receptacles shall be constructed and closed so as to prevent any loss of contents which might be caused under normal conditions of carriage, including by vibration, or by changes in temperature, humidity or pressure (resulting from change in altitude, for example).

4.1.6.2 Parts of pressure receptacles and open cryogenic receptacles which are in direct contact with dangerous goods shall not be affected or weakened by those dangerous goods and shall not cause a dangerous effect (e.g. catalysing a reaction or reacting with the dangerous goods) (see also table of standards at the end of this section). Pressure receptacles for UN 1001 acetylene, dissolved, and UN 3374 acetylene, solvent free, shall be filled with a porous mass, uniformly distributed, of a type that conforms to the requirements and testing specified by the competent authority and which:

(a) is compatible with the pressure receptacle and does not form harmful or dangerous compounds either with the acetylene or with the solvent in the case of UN 1001; and

(b) is capable of preventing the spread of decomposition of the acetylene in the mass.

In the case of UN 1001, the solvent shall be compatible with the pressure receptacles.

4.1.6.3 Pressure receptacles, including their closures and open cryogenic receptacles, shall be selected to contain a gas or a mixture of gases according to the requirements of 6.2.1.2 and the requirements of the relevant packing instructions of 4.1.4.1. This sub-section also applies to pressure receptacles which are elements of MEGCs and battery-vehicles.

4.1.6.4 A change of use of a refillable pressure receptacle shall include emptying, purging and evacuation operations to the extent necessary for safe operation (see also table of standards at the end of this section). In addition, a pressure receptacle that previously contained a Class 8 corrosive substance or a substance of another class with a corrosive subsidiary risk shall not be authorized for the carriage of a Class 2 substance unless the necessary inspection and testing as specified in 6.2.1.5 have been performed.

4.1.6.5 Prior to filling, the packer shall perform an inspection of the pressure receptacle or open cryogenic receptacle and ensure that the pressure receptacle or open cryogenic receptacle is authorized for the substance to be carried and that the requirements have been met. Shut-off valves shall be closed after filling and remain closed during carriage. The consignor shall verify that the closures and equipment are not leaking.

NOTE: *Shut-off valves fitted to individual cylinders in bundles may be open during carriage, unless the substance carried is subject to special packing provision 'k' or 'q' in packing provision P200.*

4.1.6.6 Pressure receptacles and open cryogenic receptacles shall be filled according to the working pressures, filling ratios and provisions specified in the appropriate packing instruction for the specific substance being filled. Reactive gases and gas mixtures shall be filled to a pressure such that if complete decomposition of the gas occurs, the working pressure of the pressure receptacle shall not be exceeded. Bundles of cylinders shall not be filled in excess of the lowest working pressure of any given cylinder in the bundle.

4.1.6.7 Pressure receptacles, including their closures, shall conform to the design, construction, inspection and testing requirements detailed in Chapter 6.2. When outer packagings are prescribed, the pressure receptacles and open cryogenic receptacles shall be firmly secured therein. Unless otherwise specified in the detailed packing instructions, one or more inner packagings may be enclosed in one outer packaging.

4.1.6.8 Valves shall be designed and constructed in such a way that they are inherently able to withstand damage without release of the contents or shall be protected from damage which could cause inadvertent release of the contents of the pressure receptacle, by one of the following methods (see also table of standards at the end of this section):

(a) Valves are placed inside the neck of the pressure receptacle and protected by a threaded plug or cap;

(b) Valves are protected by caps. Caps shall possess vent-holes of sufficient cross-sectional area to evacuate the gas if leakage occurs at the valves;

(c) Valves are protected by shrouds or guards;

(d) Valves are placed in a protective frame;

(e) Pressure receptacles are carried in frames, (e.g. cylinders in bundles); or

(f) Pressure receptacles are carried in protective boxes.

4.1.6.9 Non-refillable pressure receptacles shall:

(a) be carried in an outer packaging, such as a box or crate, or in shrink-wrapped or stretch-wrapped trays;

(b) be of a water capacity less than or equal to 1.25 litres when filled with flammable or toxic gas;

(c) not be used for toxic gases with an LC_{50} less than or equal to 200 ml/m^3; and

(d) not be repaired after being put into service.

4.1.6.10 Refillable pressure receptacles shall be periodically inspected according to the provisions of 6.2.1.6 and packing instruction P200 or P203 as applicable. Pressure receptacles shall not be filled after they become due for periodic inspection but may be carried after the expiry of the time-limit for purposes of performing inspection or disposal, including the intermediate carriage operations.

4.1.6.11 Repairs shall be consistent with the fabrication and testing requirements of the applicable design and construction standards and are only permitted as indicated in the relevant periodic inspection standards specified in chapter 6.2. Pressure receptacles, other than the jacket of closed cryogenic receptacles, shall not be subjected to repairs of any of the following:

(a) weld cracks or other weld defects;

(b) cracks in walls;

(c) leaks or defects in the material of the wall, head or bottom.

4.1.6.12 Receptacles shall not be offered for filling:

(a) when damaged to such an extent that the integrity of the receptacle or its service equipment may be affected;

(b) unless the receptacle and its service equipment has been examined and found to be in good working order; and

(c) unless the required certification, retest, and filling markings are legible.

4.1.6.13 Filled receptacles shall not be offered for carriage:

(a) when leaking;

(b) when damaged to such an extent that the integrity of the receptacle or its service equipment may be affected;

(c) unless the receptacle and its service equipment has been examined and found to be in good working order; and

(d) unless the required certification, retest, and filling markings are legible.

4.1.6.14 For UN pressure receptacles, the ISO standards listed below shall be applied. For other pressure receptacles, the requirements of section 4.1.6 are considered to have been complied with if the following standards, as relevant, are applied:

Applicable paragraphs	Reference	Title of document
4.1.6.2	ISO 11114-1:1997	Transportable gas cylinders – Compatibility of cylinder and valve materials with gas contents – Part 1: Metallic Materials
	ISO 11114-2:2000	Transportable gas cylinders – Compatibility of cylinder and valve materials with gas contents – Part 2: Non-metallic Materials
4.1.6.4	ISO 11621:1997	Gas cylinders – Procedures for change of gas service
	EN 1795:1997	Gas cylinders (excluding LPG) – Procedures for change of gas service.
4.1.6.8 Valves with inherent protection	Annex B of ISO 10297:1999	Gas cylinder – Refillable gas cylinder valves – Specification and type testing
	Annex A of EN 849:1996/A2:2001	Transportable gas cylinders – Cylinder valves: specification and type testing – Amendment 2
	EN 13152:2001	Testing and specifications of LPG cylinder valves – self closing
	EN 13153:2001	Testing and specifications of LPG cylinder valves – manually operated
4.1.6.8 (b) and (c)	ISO 11117:1998	Gas Cylinders – Valve Protection caps and valve guards for industrial and medical gas cylinders – Design construction and tests
	EN 962:1996/A2:2000	Valve protection caps and valve guards for industrial and medical gas cylinders – Design, construction and tests

4.1.7 Special packing provisions for organic peroxides (Class 5.2) and self-reactive substances of Class 4.1

4.1.7.0.1 For organic peroxides, all receptacles shall be "effectively closed". Where significant internal pressure may develop in a package by the evolution of a gas, a vent may be fitted, provided the gas emitted will not cause danger, otherwise the degree of filling shall be limited. Any venting device shall be so constructed that liquid will not escape when the package is in an upright position and it shall be able to prevent ingress of impurities. The outer packaging, if any, shall be so designed as not to interfere with the operation of the venting device.

4.1.7.1 ***Use of packagings***

4.1.7.1.1 Packagings for organic peroxides and self-reactive substances shall meet the requirements of Chapter 6.1 or of Chapter 6.6 at the packing group II performance level. To avoid unnecessary confinement, metal packagings meeting the test criteria of packing group I shall not be used.

4.1.7.1.2 The packing methods for organic peroxides and self-reactive substances are listed in packing instruction 520 and are designated OP1 to OP8. The quantities specified for each packing method are the maximum quantities authorized per package.

4.1.7.1.3 The packing methods appropriate for the individual currently assigned organic peroxides and self-reactive substances are listed in 2.2.41.4 and 2.2.52.4.

4.1.7.1.4 For new organic peroxides, new self-reactive substances or new formulations of currently assigned organic peroxides or self-reactive substances, the following procedure shall be used to assign the appropriate packing method:

(a) ORGANIC PEROXIDE, TYPE B or SELF-REACTIVE SUBSTANCE, TYPE B:

Packing method OP5 shall be assigned, provided that the organic peroxide (or self-reactive substance) satisfies the criteria of 20.4.3 (b) (resp. 20.4.2 (b)) of the Manual of Tests and Criteria in a packaging authorized by the packing method. If the organic peroxide (or self-reactive substance) can only satisfy these criteria in a smaller packaging than those authorized by packing method OP5 (viz. one of the packagings listed for OP1 to OP4), then the corresponding packing method with the lower OP number is assigned;

(b) ORGANIC PEROXIDE, TYPE C or SELF-REACTIVE SUBSTANCE, TYPE C:

Packing method OP6 shall be assigned, provided that the organic peroxide (or self-reactive substance) satisfies the criteria of 20.4.3 (c) (resp. 20.4.2 (c)) of the Manual of Tests and Criteria in a packaging authorized by the packing method. If the organic peroxide (or self-reactive substance) can only satisfy these criteria in a smaller packaging than those authorized by packing method OP6 then the corresponding packing method with the lower OP number is assigned;

(c) ORGANIC PEROXIDE, TYPE D or SELF-REACTIVE SUBSTANCE, TYPE D:

Packing method OP7 shall be assigned to this type of organic peroxide or self-reactive substance;

(d) ORGANIC PEROXIDE, TYPE E or SELF-REACTIVE SUBSTANCE, TYPE E:

Packing method OP8 shall be assigned to this type of organic peroxide or self-reactive substance;

(e) ORGANIC PEROXIDE, TYPE F or SELF-REACTIVE SUBSTANCE, TYPE F:

Packing method OP8 shall be assigned to this type of organic peroxide or self-reactive substance.

4.1.7.2 ***Use of intermediate bulk containers***

4.1.7.2.1 The currently assigned organic peroxides specifically listed in packing instruction IBC520 may be carried in IBCs in accordance with this packing instruction.

4.1.7.2.2 Other organic peroxides and self-reactive substances of type F may be carried in IBCs under conditions established by the competent authority of the country of origin when, on the basis of the appropriate tests, that competent authority is satisfied that such carriage may be safely conducted. The tests undertaken shall include those necessary:

(a) To prove that the organic peroxide (or self-reactive substance) complies with the principles for classification given in 20.4.3 (f) [resp. 20.4.2 (f)] of the Manual of Tests and Criteria, exit box F of Figure 20.1 (b) of the Manual;

(b) To prove the compatibility of all materials normally in contact with the substance during carriage;

(c) To determine, when applicable, the control and emergency temperatures associated with the carriage of the product in the IBC concerned as derived from the SADT;

(d) To design, when applicable, pressure and emergency relief devices; and

(e) To determine if any special provisions are necessary for safe carriage of the substance.

If the country of origin is not a Contracting Party to ADR, the classification and transport conditions shall be recognized by the competent authority of the first country Contracting Party to ADR reached by the consignment.

4.1.7.2.3 Emergencies to be taken into account are self-accelerating decomposition and fire engulfment. To prevent explosive rupture of metal or composite IBCs with a complete metal casing, the emergency-relief devices shall be designed to vent all the decomposition products and vapours evolved during self-accelerating decomposition or during a period of not less than one hour of complete fire engulfment calculated by the equations given in 4.2.1.13.8.

4.1.8 Special packing provisions for infectious substances (Class 6.2)

4.1.8.1 Consignors of infectious substances shall ensure that packages are prepared in such a manner that they arrive at their destination in good condition and present no hazard to persons or animals during carriage.

4.1.8.2 The definitions in 1.2.1 and the general packing provisions of 4.1.1.1 to 4.1.1.16, except 4.1.1.3, 4.1.1.9 to 4.1.1.12 and 4.1.1.15 apply to infectious substances packages. However, liquids shall be filled into packagings, including IBCs, which have an appropriate resistance to the internal pressure that may develop under normal conditions of carriage.

4.1.8.3 For UN No. 2814 and UN No. 2900, an itemized list of contents shall be enclosed between the secondary packaging and the outer packaging.
When the infectious substances to be carried are unknown, but suspected of meeting the criteria for inclusion in category A and assignment to UN Nos 2814 or 2900, the words "suspected category A infectious substance" shall be shown, in parenthesis, following the proper shipping name on the document inside the outer packaging.

4.1.8.4 Before an empty packaging is returned to the consignor, or sent elsewhere, it shall be thoroughly disinfected or sterilized and any label or marking indicating that it had contained an infectious substance shall be removed or obliterated.

4.1.8.5 The provisions of this section do not apply to UN No. 3373 Diagnostic specimens or clinical specimens (see packing instruction P650).

4.1.9 Special packing provisions for Class 7

4.1.9.1 ***General***

4.1.9.1.1 Radioactive material, packagings and packages shall meet the requirements of Chapter 6.4. The quantity of radioactive material in a package shall not exceed the limits specified in 2.2.7.7.1.

4.1.9.1.2 The non-fixed contamination on the external surfaces of any package shall be kept as low as practicable and, under routine conditions of transport, shall not exceed the following limits:

(a) 4 Bq/cm^2 for beta and gamma emitters and low toxicity alpha emitters; and

(b) 0.4 Bq/cm^2 for all other alpha emitters.

These limits are applicable when averaged over any area of 300 cm^2 of any part of the surface.

4.1.9.1.3 A package shall not contain any other items except such articles and documents as are necessary for the use of the radioactive material. This requirement shall not preclude the carriage of low specific activity material or surface contaminated objects with other items. The carriage of such articles and documents in a package, or of low specific activity material or surface contaminated objects with other items may be permitted provided that there is no interaction between them and the packaging or its radioactive contents that would reduce the safety of the package.

4.1.9.1.4 Except as provided in 7.5.11, CV33, the level of non-fixed contamination on the external and internal surfaces of overpacks, containers, tanks, IBCs and vehicles shall not exceed the limits specified in 4.1.9.1.2.

4.1.9.1.5 Radioactive material with a subsidiary risk shall be carried in packagings, IBCs or tanks fully complying with the requirements of the relevant chapters of Part 6 as appropriate, as well as applicable requirements of Chapters 4.1, 4.2 or 4.3 for that subsidiary risk.

4.1.9.2 ***Requirements and controls for carriage of LSA material and SCO***

4.1.9.2.1 The quantity of LSA material or SCO in a single Type IP-1 package , Type IP-2 package, Type IP-3 package , or object or collection of objects, whichever is appropriate, shall be so restricted that the external radiation level at 3 m from the unshielded material or object or collection of objects does not exceed 10 mSv/h.

4.1.9.2.2 LSA material and SCO which is or contains fissile material shall meet the applicable requirements of 7.5.11, CV33 and 6.4.11.1.

4.1.9.2.3 LSA material and SCO in groups LSA-I and SCO-I may be carried unpackaged under the following conditions:

(a) All unpackaged material other than ores containing only naturally occurring radionuclides shall be carried in such a manner that under routine conditions of carriage there will be no escape of the radioactive contents from the vehicle nor will there be any loss of shielding;

(b) Each vehicle shall be under exclusive use, except when only carrying SCO-I on which the contamination on the accessible and the inaccessible surfaces is not greater than ten times the corresponding level according to the definition of "contamination" in 2.2.7.2; and

(c) For SCO-I where it is suspected that non-fixed contamination exists on inaccessible surfaces in excess of the values specified in 2.2.7.5 (a)(i), measures shall be taken to ensure that the radioactive material is not released into the vehicle.

4.1.9.2.4 LSA material and SCO, except as otherwise specified in 4.1.9.2.3, shall be packaged in accordance with the table below:

Industrial package requirements for LSA material and SCO

Radioactive contents	Industrial package type	
	Exclusive use	Not under exclusive use
LSA-I		
Solid[a]	Type IP-1	Type IP-1
Liquid	Type IP-1	Type IP-2
LSA-II		
Solid	Type IP-2	Type IP-2
Liquid and gas	Type IP-2	Type IP-3
LSA-III	Type IP-2	Type IP-3
SCO-I[a]	Type IP-1	Type IP-1
SCO-II	Type IP-2	Type IP-2

[a] *Under the conditions specified in 4.1.9.2.3, LSA-I material and SCO-I may be carried unpackaged.*

4.1.10 Special provisions for mixed packing

4.1.10.1 When mixed packing is permitted in accordance with the provisions of this section, different dangerous goods or dangerous goods and other goods may be packed together in combination packagings conforming to 6.1.4.21, provided that they do not react dangerously with one another and that all other relevant provisions of this Chapter are complied with.

NOTE 1*: See also 4.1.1.5 and 4.1.1.6.*

NOTE 2*: For goods of Class 7, see 4.1.9.*

4.1.10.2 Except for packages containing Class 1 goods only or Class 7 goods only, if wooden or fibreboard boxes are used as outer packagings, a package containing different goods packed together shall not weigh more than 100 kg.

4.1.10.3 Unless otherwise prescribed by a special provision applicable according to 4.1.10.4, dangerous goods of the same class and the same classification code may be packed together.

4.1.10.4 When indicated for a given entry in Column (9b) of Table A of Chapter 3.2, the following special provisions shall apply to the mixed packing of the goods assigned to that entry with other goods in the same package.

MP 1 May only be packed together with goods of the same type within the same compatibility group.

MP 2 Shall not be packed together with other goods.

MP 3 Mixed packing of UN No. 1873 with UN No. 1802 is permitted.

MP 4 Shall not be packed together with goods of other classes or with goods which are not subject to the requirements of ADR. However, if this organic peroxide is a hardener or compound system for Class 3 substances, mixed packing is permitted with these substances of Class 3.

MP 5 UN No. 2814 and UN No. 2900 may be packed together in a combination packaging in conformity with P620. They shall not be packed together with other goods; this does not apply to UN No. 3373 diagnostic specimens or clinical specimens packed in accordance with P650 or to substances added as coolants, e.g. ice, dry ice or refrigerated liquid nitrogen.

MP 6 Shall not be packed together with other goods. This does not apply to substances added as coolants, e.g. ice, dry ice or refrigerated liquid nitrogen.

MP 7 May - in quantities not exceeding 5 litres per inner packaging - be packed together in a combination packaging conforming to 6.1.4.21:

- with goods of the same class covered by other classification codes when mixed packing is also permitted for these; or
- with goods which are not subject to the requirements of ADR,

provided they do not react dangerously with one another.

MP 8 May - in quantities not exceeding 3 litres per inner packaging - be packed together in a combination packaging conforming to 6.1.4.21:

- with goods of the same class covered by other classification codes when mixed packing is also permitted for these; or
- with goods which are not subject to the requirements of ADR,

provided they do not react dangerously with one another.

MP 9 May be packed together in an outer packaging for combination packagings in accordance with 6.1.4.21:

- with other goods of Class 2;
- with goods of other classes, when the mixed packing is also permitted for these; or
- with goods which are not subject to the requirements of ADR,

provided they do not react dangerously with one another.

MP 10 May - in quantities not exceeding 5 kg per inner packaging - be packed together in a combination packaging conforming to 6.1.4.21:

- with goods of the same class covered by other classification codes or with goods of other classes, when mixed packing is also permitted for these; or
- with goods which are not subject to the requirements of ADR,

provided they do not react dangerously with one another.

MP 11 May - in quantities not exceeding 5 kg per inner packaging - be packed together in a combination packaging conforming to 6.1.4.21:

- with goods of the same class covered by other classification codes or with goods of other classes (except substances of packing group I or II of Class 5.1) when mixed packing is also permitted for these; or

- with goods which are not subject to the requirements of ADR,

provided they do not react dangerously with one another.

MP 12 May - in quantities not exceeding 5 kg per inner packaging - be packed together in a combination packaging conforming to 6.1.4.21:

- with goods of the same class covered by other classification codes or with goods of other classes (except substances of packing group I or II of Class 5.1) when mixed packing is also permitted for these; or

- with goods which are not subject to the requirements of ADR,

provided they do not react dangerously with one another.

Packagings shall not weigh more than 45 kg. If fibreboard boxes are used as outer packagings however, a package shall not weigh more than 27 kg.

MP 13 May - in quantities not exceeding 3 kg per inner packaging and per package - be packed together in a combination packaging conforming to 6.1.4.21:

- with goods of the same class covered by other classification codes or with goods of other classes, when mixed packing is also permitted for these; or

- with goods which are not subject to the requirements of ADR,

provided they do not react dangerously with one another.

MP 14 May - in quantities not exceeding 6 kg per inner packaging - be packed together in a combination packaging conforming to 6.1.4.21:

- with goods of the same class covered by other classification codes or with goods of other classes, when mixed packing is also permitted for these; or

- with goods which are not subject to the requirements of ADR,

provided they do not react dangerously with one another.

MP 15 May - in quantities not exceeding 3 litres per inner packaging - be packed together in a combination packaging conforming to 6.1.4.21:

- with goods of the same class covered by other classification codes or with goods of other classes, when mixed packing is also permitted for these; or

- with goods which are not subject to the requirements of ADR,

provided they do not react dangerously with one another.

MP 16 May - in quantities not exceeding 3 litres per inner packaging and per package - be packed together in a combination packaging conforming to 6.1.4.21:

- with goods of the same class covered by other classification codes or with goods of other classes, when mixed packing is also permitted for these; or

- with goods which are not subject to the requirements of ADR,

provided they do not react dangerously with one another.

MP 17 May - in quantities not exceeding 0.5 litre per inner packaging and 1 litre per package - be packed together in a combination packaging conforming to 6.1.4.21:

- with goods of other classes, except Class 7, when mixed packing is also permitted for these; or

- with goods which are not subject to the requirements of ADR,

provided they do not react dangerously with one another.

MP 18 May - in quantities not exceeding 0.5 kg per inner packaging and 1 kg per package - be packed together in a combination packaging conforming to 6.1.4.21:

- with goods or articles of other classes, except Class 7, when mixed packing is also permitted for these; or

- with goods which are not subject to the requirements of ADR,

provided they do not react dangerously with one another.

MP 19 May - in quantities not exceeding 5 litres per inner packaging - be packed together in a combination packaging conforming to 6.1.4.21:

- with goods of the same class covered by other classification codes or with goods of other classes, when mixed packing is also permitted for these; or

- with goods which are not subject to the requirements of ADR, provided they do not react dangerously with one another.

MP 20 May be packed together with substances covered by the same UN number.

Shall not be packed together with goods and articles of Class 1 having different UN numbers.

Shall not be packed together with goods of other classes or with goods which are not subject to the requirements of ADR.

MP 21 May be packed together with articles covered by the same UN number.

Shall not be packed together with goods of Class 1 having different UN numbers, except for:

(a) their own means of initiation, provided that

(i) the means of initiation will not function under normal conditions of carriage; or

(ii) such means have at least two effective protective features which prevent explosion of an article in the event of accidental functioning of the means of initiation; or

(iii) when such means do not have two effective protective features (i.e. means of initiation assigned to compatibility group B), in the opinion of the competent authority of the country of origin[3], the accidental functioning of the means of initiation does not cause the explosion of an article under normal conditions of carriage;

(b) articles of compatibility groups C, D and E.

Shall not be packed together with goods of other classes or with goods which are not subject to the requirements of ADR.

When goods are packed together in accordance with this special provision, account shall be taken of a possible amendment of the classification of packages in accordance with 2.2.1.1. For the description of the goods in the transport document, see 5.4.1.2.1 (b).

MP 22 May be packed together with articles covered by the same UN number.

Shall not be packed together with goods of Class 1 having different UN numbers, except for

(a) their own means of initiation, provided that the means of initiation will not function under normal conditions of carriage;

(b) articles of compatibility groups C, D and E.

Shall not be packed together with goods of other classes or with goods which are not subject to the requirements of ADR.

When goods are packed together in accordance with this special provision, account shall be taken of a possible amendment of the classification of packages in accordance with 2.2.1.1. For the description of the goods in the transport document, see 5.4.1.2.1 (b).

MP 23 May be packed together with articles covered by the same UN number.

Shall not be packed together with goods and articles of Class 1 having different UN numbers; however, exception is made for their own means of initiation, provided that the means of initiation will not function under normal conditions of carriage.

Shall not be packed together with goods of other classes or with goods which are not subject to the requirements of ADR.

---

[3] *If the country of origin is not a Contracting Party to ADR, the approval shall require validation by the competent authority of the first country Contracting Party to ADR reached by the consignment.*

When goods are packed together in accordance with this special provision, account shall be taken of a possible amendment of the classification of packages in accordance with 2.2.1.1. For the description of the goods in the transport document, see 5.4.1.2.1 (b).

MP 24 May be packed together with goods with the UN numbers shown in the table below, under the following conditions:

- if a letter A is indicated in the table, the goods with those UN numbers may be included in the same package without any special limitation of mass;

- if a letter B is indicated in the table, the goods with those UN numbers may be included in the same package up to a total mass of 50 kg of explosive substances.

When goods are packed together in accordance with this special provision, account shall be taken of a possible amendment of the classification of packages in accordance with 2.2.1.1. For the description of the goods in the transport document, see 5.4.1.2.1 (b).

UN No.	0012	0014	0027	0028	0044	0054	0160	0161	0186	0191	0194	0195	0197	0238	0240	0312	0333	0334	0335	0336	0337	0373	0405	0428	0429	0430	0431	0432
0012		A																										
0014	A																											
0027				B	B		B	B																				
0028			B		B		B	B																				
0044			B	B			B	B																				
0054									B	B	B	B	B	B	B	B						B	B	B	B	B	B	B
0160			B	B	B			B																				
0161			B	B	B		B																					
0186						B				B	B	B	B	B	B	B						B	B	B	B	B	B	B
0191						B			B		B	B	B	B	B	B						B	B	B	B	B	B	B
0194						B			B	B		B	B	B	B	B						B	B	B	B	B	B	B
0195						B			B	B	B		B	B	B	B						B	B	B	B	B	B	B
0197						B			B	B	B	B		B	B	B						B	B	B	B	B	B	B
0238						B			B	B	B	B	B		B	B						B	B	B	B	B	B	B
0240						B			B	B	B	B	B	B		B						B	B	B	B	B	B	B
0312						B			B	B	B	B	B	B	B							B	B	B	B	B	B	B
0333																		A	A	A	A							
0334																	A		A	A	A							
0335																	A	A		A	A							
0336																	A	A	A		A							
0337																	A	A	A	A								
0373						B			B	B	B	B	B	B	B	B							B	B	B	B	B	B
0405						B			B	B	B	B	B	B	B	B						B		B	B	B	B	B
0428						B			B	B	B	B	B	B	B	B						B	B		B	B	B	B
0429						B			B	B	B	B	B	B	B	B						B	B	B		B	B	B
0430						B			B	B	B	B	B	B	B	B						B	B	B	B		B	B
0431						B			B	B	B	B	B	B	B	B						B	B	B	B	B		B
0432						B			B	B	B	B	B	B	B	B						B	B	B	B	B	B	

CHAPTER 4.2

USE OF PORTABLE TANKS AND UN MULTIPLE-ELEMENT GAS CONTAINERS (MEGCs)

NOTE 1: *For fixed tanks (tank-vehicles), demountable tanks and tank-containers and tank-swap bodies, with shells made of metallic materials, and battery-vehicles and multiple element gas containers (MEGCs), see Chapter 4.3; for fibre-reinforced plastics tanks, see Chapter 4.4; for vacuum operated waste tanks, see Chapter 4.5.*

NOTE 2: *Portable tanks and UN MEGCs marked in accordance with the applicable provisions of Chapter 6.7 but which were approved in a State which is not a Contracting Party to ADR may nevertheless be used for carriage under ADR..*

4.2.1 General provisions for the use of portable tanks for the carriage of substances of Class 1 and Classes 3 to 9

4.2.1.1 This section provides general provisions applicable to the use of portable tanks for the carriage of substances of Classes 1, 3, 4.1, 4.2, 4.3, 5.1, 5.2, 6.1, 6.2, 7, 8 and 9. In addition to these general provisions, portable tanks shall conform to the design, construction, inspection and testing requirements detailed in 6.7.2. Substances shall be carried in portable tanks conforming to the applicable portable tank instruction identified in Column (10) of the Table A of Chapter 3.2 and described in 4.2.5.2.6 (T1 to T23) and the portable tank special provisions assigned to each substance in Column (11) of Table A of Chapter 3.2 and described in 4.2.5.3.

4.2.1.2 During carriage, portable tanks shall be adequately protected against damage to the shell and service equipment resulting from lateral and longitudinal impact and overturning. If the shell and service equipment are so constructed as to withstand impact or overturning it need not be protected in this way. Examples of such protection are given in 6.7.2.17.5.

4.2.1.3 Certain substances are chemically unstable. They are accepted for carriage only when the necessary steps have been taken to prevent their dangerous decomposition, transformation or polymerization during carriage. To this end, care shall in particular be taken to ensure that shells do not contain any substances liable to promote these reactions.

4.2.1.4 The temperature of the outer surface of the shell excluding openings and their closures or of the thermal insulation shall not exceed 70 °C during carriage. When necessary, the shell shall be thermally insulated.

4.2.1.5 Empty portable tanks not cleaned and not gas-free shall comply with the same provisions as portable tanks filled with the previous substance.

4.2.1.6 Substances shall not be carried in the same or in adjoining compartments of shells when they may react dangerously with each other (see definition for "dangerous reaction" in 1.2.1).

4.2.1.7 The design approval certificate, the test report and the certificate showing the results of the initial inspection and test for each portable tank issued by the competent authority or its authorized body shall be retained by the authority or body and the owner. Owners shall be able to provide this documentation upon the request of any competent authority.

4.2.1.8 Unless the name of the substance(s) being carried appears on the metal plate described in 6.7.2.20.2 a copy of the certificate specified in 6.7.2.18.1 shall be made available upon the request of a competent authority or its authorized body and readily provided by the consignor, consignee or agent, as appropriate.

4.2.1.9 ***Degree of filling***

4.2.1.9.1 Prior to filling, the consignor shall ensure that the appropriate portable tank is used and that the portable tank is not filled with substances which in contact with the materials of the shell, gaskets, service equipment and any protective linings, are likely to react dangerously with them to form dangerous products or appreciably weaken these materials. The consignor may need to consult the manufacturer of the substance in conjunction with the competent authority for guidance on the compatibility of the substance with the portable tank materials.

4.2.1.9.1.1 Portable tanks shall not be filled above the extent provided in 4.2.1.9.2 to 4.2.1.9.6. The applicability of 4.2.1.9.2, 4.2.1.9.3 or 4.2.1.9.5.1 to individual substances is specified in the applicable portable tank instruction or special provisions in 4.2.5.2.6 or 4.2.5.3 and Column (10) or (11) of Table A of Chapter 3.2.

4.2.1.9.2 The maximum degree of filling (in %) for general use is determined by the formula:

$$\text{Degree of filling} = \frac{97}{1 + (t_r - t_f)}$$

4.2.1.9.3 The maximum degree of filling (in %) for liquids of Class 6.1 and Class 8, in packing groups I and II, and liquids with an absolute vapour pressure of more than 175 kPa (1.75 bar) at 65 °C, is determined by the formula:

$$\text{Degree of filling} = \frac{95}{1 + \alpha\,(t_r - t_f)}$$

4.2.1.9.4 In these formulae, α is the mean coefficient of cubical expansion of the liquid between the mean temperature of the liquid during filling (t_f) and the maximum mean bulk temperature during carriage (t_r) (both in °C). For liquids carried under ambient conditions α could be calculated by the formula:

$$\alpha = \frac{d_{15} - d_{50}}{35 d_{50}}$$

in which d_{15} and d_{50} are the densities of the liquid at 15 °C and 50 °C, respectively.

4.2.1.9.4.1 The maximum mean bulk temperature (t_r) shall be taken as 50 °C except that, for journeys under temperate or extreme climatic conditions, the competent authorities concerned may agree to a lower or require a higher temperature, as appropriate.

4.2.1.9.5 The provisions of 4.2.1.9.2 to 4.2.1.9.4.1 do not apply to portable tanks which contain substances maintained at a temperature above 50 °C during carriage (e.g. by means of a heating device). For portable tanks equipped with a heating device, a temperature regulator shall be used to ensure the maximum degree of filling is not more than 95% full at any time during carriage.

4.2.1.9.5.1 The maximum degree of filling (in %) for solids carried above their melting point and for elevated temperature liquids shall be determined by the following formula:

$$\text{Degree of filling} = 95\,\frac{d_r}{d_f}$$

in which d_f and d_r are the densities of the liquid at the mean temperature of the liquid during filling and the maximum mean bulk temperature during carriage respectively.

4.2.1.9.6 Portable tanks shall not be offered for carriage:

(a) With a degree of filling, for liquids having a viscosity less than 2 680 mm^2/s at 20 °C or maximum temperature of the substance during carriage in the case of the heated substance, of more than 20% but less than 80% unless the shells of portable tanks are divided, by partitions or surge plates, into sections of not more than 7 500 litres capacity;

(b) With residue of substances previously carried adhering to the outside of the shell or service equipment;

(c) When leaking or damaged to such an extent that the integrity of the portable tank or its lifting or securing arrangements may be affected; and

(d) Unless the service equipment has been examined and found to be in good working order.

4.2.1.9.7 Forklift pockets of portable tanks shall be closed off when the tank is filled. This provision does not apply to portable tanks which according to 6.7.3.13.4 need not be provided with a means of closing off the forklift pockets.

4.2.1.10 ***Additional provisions applicable to the carriage of Class 3 substances in portable tanks***

4.2.1.10.1 All portable tanks intended for the carriage of flammable liquids shall be closed and be fitted with relief devices in accordance with 6.7.2.8 to 6.7.2.15.

4.2.1.10.1.1 For portable tanks intended for use only on land, open venting systems may be used if allowed according to Chapter 4.3.

4.2.1.11 ***Additional provisions applicable to the carriage of Classes 4.1, 4.2 or 4.3 substances (other than Class 4.1 self-reactive substances) in portable tanks***

(Reserved)

NOTE*: For Class 4.1 self-reactive substances, see 4.2.1.13.1.*

4.2.1.12 ***Additional provisions applicable to the carriage of Class 5.1 substances in portable tanks***

(Reserved)

4.2.1.13 ***Additional provisions applicable to the carriage of Class 5.2 substances and Class 4.1 self-reactive substances in portable tanks***

4.2.1.13.1 Each substance shall have been tested and a report submitted to the competent authority of the country of origin for approval. Notification thereof shall be sent to the competent authority of the country of destination. The notification shall contain relevant transport information and the report with test results. The tests undertaken shall include those necessary:

(a) To prove the compatibility of all materials normally in contact with the substance during carriage;

(b) To provide data for the design of the pressure and emergency relief devices taking into account the design characteristics of the portable tank.

Any additional provision necessary for safe carriage of the substance shall be clearly described in the report.

4.2.1.13.2 The following provisions apply to portable tanks intended for the carriage of Type F organic peroxides or Type F self-reactive substances with a Self-Accelerating Decomposition Temperature (SADT) of 55 °C or more. In case of conflict these provisions prevail over those specified in Section 6.7.2. Emergencies to be taken into account are self-accelerating decomposition of the substance and fire-engulfment as described in 4.2.1.13.8.

4.2.1.13.3 The additional provisions for carriage of organic peroxides or self-reactive substances with a SADT less than 55 °C in portable tanks shall be specified by the competent authority of the country of origin. Notification thereof shall be sent to the competent authority of the country of destination.

4.2.1.13.4 The portable tank shall be designed for a test pressure of at least 0.4 MPa (4 bar).

4.2.1.13.5 Portable tanks shall be fitted with temperature sensing devices.

4.2.1.13.6 Portable tanks shall be fitted with pressure-relief devices and emergency-relief devices. Vacuum-relief devices may also be used. Pressure-relief devices shall operate at pressures determined according to both the properties of the substance and the construction characteristics of the portable tank. Fusible elements are not allowed in the shell.

4.2.1.13.7 The pressure-relief devices shall consist of spring-loaded valves fitted to prevent significant build-up within the portable tank of the decomposition products and vapours released at a temperature of 50 °C. The capacity and start-to-discharge pressure of the relief valves shall be based on the results of the tests specified in 4.2.1.13.1. The start-to-discharge pressure shall, however, in no case be such that liquid would escape from the valve(s) if the portable tank were overturned.

4.2.1.13.8 The emergency-relief devices may be of the spring-loaded or frangible types, or a combination of the two, designed to vent all the decomposition products and vapours evolved during a period of not less than one hour of complete fire-engulfment as calculated by the following formula:

$$q = 70961 \times F \times A^{0.82}$$

where:

q = heat absorption [W]

A = wetted area [m^2]

F = insulation factor
= 1 for non-insulated shells, or

$$F = \frac{U\,(923 - T)}{47032} \text{ for insulated shells}$$

where:

K = heat conductivity of insulation layer [$W \cong m^{-1} \cong K^{-1}$]

L = thickness of insulation layer [m]

U = K/L = heat transfer coefficient of the insulation [$W \cong m^{-2} \cong K^{-1}$]

T = temperature of the substance at relieving conditions [K]

The start-to-discharge pressure of the emergency-relief device(s) shall be higher than that specified in 4.2.1.13.7 and based on the results of the tests referred to in 4.2.1.13.1. The emergency-relief devices shall be dimensioned in such a way that the maximum pressure in the portable tank never exceeds the test pressure of the tank.

***NOTE**: An example of a method to determine the size of emergency-relief devices is given in Appendix 5 of the "Manual of Tests and Criteria".*

4.2.1.13.9 For insulated portable tanks the capacity and setting of emergency-relief device(s) shall be determined assuming a loss of insulation from 1% of the surface area.

4.2.1.13.10 Vacuum-relief devices and spring-loaded valves shall be provided with flame arresters. Due attention shall be paid to the reduction of the relief capacity caused by the flame arrester.

4.2.1.13.11 Service equipment such as valves and external piping shall be so arranged that no substance remains in them after filling the portable tank.

4.2.1.13.12 Portable tanks may be either insulated or protected by a sun-shield. If the SADT of the substance in the portable tank is 55 °C or less, or the portable tank is constructed of aluminium, the portable tank shall be completely insulated. The outer surface shall be finished in white or bright metal.

4.2.1.13.13 The degree of filling shall not exceed 90% at 15 °C.

4.2.1.13.14 The marking as required in 6.7.2.20.2 shall include the UN number and the technical name with the approved concentration of the substance concerned.

4.2.1.13.15 Organic peroxides and self-reactive substances specifically listed in portable tank instruction T23 in 4.2.5.2.6 may be carried in portable tanks.

4.2.1.14 ***Additional provisions applicable to the carriage of Class 6.1 substances in portable tanks***

(Reserved)

4.2.1.15 ***Additional provisions applicable to the carriage of Class 7 substances in portable tanks***

4.2.1.15.1 Portable tanks used for the carriage of radioactive material shall not be used for the carriage of other goods.

4.2.1.15.2 The degree of filling for portable tanks shall not exceed 90% or, alternatively, any other value approved by the competent authority.

4.2.1.16 ***Additional provisions applicable to the carriage of Class 8 substances in portable tanks***

4.2.1.16.1 Pressure-relief devices of portable tanks used for the carriage of Class 8 substances shall be inspected at intervals not exceeding one year.

4.2.1.17 ***Additional provisions applicable to the carriage of Class 9 substances in portable tanks***

(Reserved)

4.2.1.18 ***Additional provisions applicable to the carriage of solid substances carried above their melting point***

4.2.1.18.1 Solid substances carried or offered for carriage above their melting point which are not assigned a portable tank instruction in column (10) of the Table A of Chapter 3.2 or when the assigned portable tank instruction does not apply to carriage at temperatures above their melting point may be carried in portable tanks provided that the solid substances are classified in Classes 4.1, 4.2, 4.3, 5.1, 6.1, 8 or 9 and have no subsidiary risk other than that of Class 6.1 or Class 8 and are in packing group II or III.

4.2.1.18.2 Unless otherwise indicated in the Table A of Chapter 3.2, portable tanks used for the carriage of these solid substances above their melting point shall conform to the provisions of portable tank instruction T4 for solid substances of packing group III or T7 for solid substances of packing group II. A portable tank which affords an equivalent or greater level of safety may be selected according to 4.2.5.2.5. The maximum degree of filling (in %) shall be determined according to 4.2.1.9.5 (TP3).

4.2.2 General provisions for the use of portable tanks for the carriage of non-refrigerated liquefied gases

4.2.2.1 This section provides general provisions applicable to the use of portable tanks for the carriage of non-refrigerated liquefied gases.

4.2.2.2 Portable tanks shall conform to the design, construction, inspection and testing requirements detailed in 6.7.3. Non-refrigerated liquefied gases shall be carried in portable tanks conforming to portable tank instruction T50 as described in 4.2.5.2.6 and any portable tank special provisions assigned to specific non-refrigerated liquefied gases in Column (11) of Table A of Chapter 3.2 and described in 4.2.5.3.

4.2.2.3 During carriage, portable tanks shall be adequately protected against damage to the shell and service equipment resulting from lateral and longitudinal impact and overturning. If the shell and service equipment are so constructed as to withstand impact or overturning it need not be protected in this way. Examples of such protection are given in 6.7.3.13.5.

4.2.2.4 Certain non-refrigerated liquefied gases are chemically unstable. They are accepted for carriage only when the necessary steps have been taken to prevent their dangerous decomposition, transformation or polymerization during carriage. To this end, care shall in particular be taken to ensure that portable tanks do not contain any non-refrigerated liquefied gases liable to promote these reactions.

4.2.2.5 Unless the name of the gas(es) being carried appears on the metal plate described in 6.7.3.16.2, a copy of the certificate specified in 6.7.3.14.1 shall be made available upon a competent authority request and readily provided by the consignor, consignee or agent, as appropriate.

4.2.2.6 Empty portable tanks not cleaned and not gas-free shall comply with the same provisions as portable tanks filled with the previous non-refrigerated liquefied gas.

4.2.2.7 ***Filling***

4.2.2.7.1 Prior to filling the portable tank shall be inspected to ensure that it is authorized for the non-refrigerated liquefied gas to be carried and that the portable tank is not loaded with non-refrigerated liquefied gases which in contact with the materials of the shell, gaskets, service equipment and any protective linings, are likely to react dangerously with them to form

dangerous products or appreciably weaken these materials. During filling, the temperature of the non-refrigerated liquefied gas shall fall within the limits of the design temperature range.

4.2.2.7.2 The maximum mass of non-refrigerated liquefied gas per litre of shell capacity (kg/l) shall not exceed the density of the non-refrigerated liquefied gas at 50 °C multiplied by 0.95. Furthermore, the shell shall not be liquid-full at 60 °C.

4.2.2.7.3 Portable tanks shall not be filled above their maximum permissible gross mass and the maximum permissible load mass specified for each gas to be carried.

4.2.2.8 Portable tanks shall not be offered for carriage:

(a) In an ullage condition liable to produce an unacceptable hydraulic force due to surge within the shell;

(b) When leaking;

(c) When damaged to such an extent that the integrity of the tank or its lifting or securing arrangements may be affected; and

(d) Unless the service equipment has been examined and found to be in good working order.

4.2.2.9 Forklift pockets of portable tanks shall be closed off when the tank is filled. This provision does not apply to portable tanks which according to 6.7.4.12.4 need not be provided with a means of closing off the forklift pockets.

4.2.3 General provisions for the use of portable tanks for the carriage of refrigerated liquefied gases

4.2.3.1 This section provides general provisions applicable to the use of portable tanks for the carriage of refrigerated liquefied gases.

4.2.3.2 Portable tanks shall conform to the design, construction, inspection and testing requirements detailed in 6.7.4. Refrigerated liquefied gases shall be carried in portable tanks conforming to portable tank instruction T75 as described in 4.2.5.2.6 and the portable tank special provisions assigned to each substance in Column (11) of Table A of Chapter 3.2 and described in 4.2.5.3.

4.2.3.3 During carriage, portable tanks shall be adequately protected against damage to the shell and service equipment resulting from lateral and longitudinal impact and overturning. If the shell and service equipment are so constructed as to withstand impact or overturning it need not be protected in this way. Examples of such protection are provided in 6.7.4.12.5.

4.2.3.4 Unless the name of the gas(es) being carried appears on the metal plate described in 6.7.4.15.2, a copy of the certificate specified in 6.7.4.13.1 shall be made available upon a competent authority request and readily provided by the consignor, consignee or agent, as appropriate.

4.2.3.5 Empty portable tanks not cleaned and not gas-free shall comply with the same provisions as portable tanks filled with the previous substance.

4.2.3.6 ***Filling***

4.2.3.6.1 Prior to filling the portable tank shall be inspected to ensure that it is authorized for the refrigerated liquefied gas to be carried and that the portable tank is not loaded with refrigerated liquefied gases which in contact with the materials of the shell, gaskets, service equipment and any protective linings, are likely to react dangerously with them to form dangerous products or appreciably weaken these materials. During filling, the temperature of the refrigerated liquefied gas shall be within the limits of the design temperature range.

4.2.3.6.2 In estimating the initial degree of filling the necessary holding time for the intended journey including any delays which might be encountered shall be taken into consideration. The initial degree of filling of the shell, except as provided for in 4.2.3.6.3 and 4.2.3.6.4, shall be such that if the contents, except helium, were to be raised to a temperature at which the vapour pressure is equal to the maximum allowable working pressure (MAWP) the volume occupied by liquid would not exceed 98%.

4.2.3.6.3 Shells intended for the carriage of helium can be filled up to but not above the inlet of the pressure-relief device.

4.2.3.6.4 A higher initial degree of filling may be allowed, subject to approval by the competent authority, when the intended duration of carriage is considerably shorter than the holding time.

4.2.3.7 ***Actual holding time***

4.2.3.7.1 The actual holding time shall be calculated for each journey in accordance with a procedure recognized by the competent authority, on the basis of the following:

(a) The reference holding time for the refrigerated liquefied gas to be carried (see 6.7.4.2.8.1) (as indicated on the plate referred to in 6.7.4.15.1);

(b) The actual filling density;

(c) The actual filling pressure;

(d) The lowest set pressure of the pressure limiting device(s).

4.2.3.7.2 The actual holding time shall be marked either on the portable tank itself or on a metal plate firmly secured to the portable tank, in accordance with 6.7.4.15.2.

4.2.3.8 Portable tanks shall not be offered for carriage:

(a) In an ullage condition liable to produce an unacceptable hydraulic force due to surge within the shell;

(b) When leaking;

(c) When damaged to such an extent that the integrity of the portable tank or its lifting or securing arrangements may be affected;

(d) Unless the service equipment has been examined and found to be in good working order;

(e) Unless the actual holding time for the refrigerated liquefied gas being carried has been determined in accordance with 4.2.3.7 and the portable tank is marked in accordance with 6.7.4.15.2; and

(f) Unless the duration of carriage, after taking into consideration any delays which might be encountered, does not exceed the actual holding time.

4.2.3.9 Forklift pockets of portable tanks shall be closed off when the tank is filled. This provision does not apply to portable tanks which according to 6.7.4.12.4, need not be provided with a means of closing off the forklift pockets.

4.2.4 General provisions for the use of UN multiple-element gas containers (MEGCs)

4.2.4.1 This section provides general requirements applicable to the use of multiple-element gas containers (MEGCs) for the carriage of non-refrigerated gases referred to in 6.7.5.

4.2.4.2 MEGCs shall conform to the design, construction, inspection and testing requirements detailed in 6.7.5. The elements of MEGCs shall be periodically inspected according to the provisions set out in packing instruction P200 of 4.1.4.1 and in 6.2.1.5.

4.2.4.3 During carriage, MEGCs shall be protected against damage to the elements and service equipment resulting from lateral and longitudinal impact and overturning. If the elements and service equipment are so constructed as to withstand impact or overturning, they need not be protected in this way. Examples of such protection are given in 6.7.5.10.4.

4.2.4.4 The periodic testing and inspection requirements for MEGCs are specified in 6.7.5.12. MEGCs or their elements shall not be charged or filled after they become due for periodic inspection but may be carried after the expiry of the time limit.

4.2.4.5 ***Filling***

4.2.4.5.1 Prior to filling, the MEGC shall be inspected to ensure that it is authorized for the gas to be carried and that the applicable provisions of ADR have been met.

4.2.4.5.2 Elements of MEGCs shall be filled according to the working pressures, filling ratios and filling provisions specified in packing instruction P200 of 4.1.4.1 for the specific gas being filled into each element. In no case shall an MEGC or group of elements be filled as a unit in excess of the lowest working pressure of any given element.

4.2.4.5.3 MEGCs shall not be filled above their maximum permissible gross mass.

4.2.4.5.4 Isolation valves shall be closed after filling and remain closed during carriage. Toxic gases (gases of groups T, TF, TC, TO, TFC and TOC) shall only be carried in MEGCs where each element is equipped with an isolation valve.

4.2.4.5.5 The opening(s) for filling shall be closed by caps or plugs. The leakproofness of the closures and equipment shall be verified by the filler after filling.

4.2.4.5.6 MEGCs shall not be offered for filling:

(a) when damaged to such an extent that the integrity of the pressure receptacles or its structural or service equipment may be affected;

(b) unless the pressure receptacles and its structural and service equipment has been examined and found to be in good working order; and

(c) unless the required certification, retest, and filling markings are legible.

4.2.4.6 Charged MEGCs shall not be offered for carriage;

(a) when leaking;

(b) when damaged to such an extent that the integrity of the pressure receptacles or its structural or service equipment may be affected;

(c) unless the pressure receptacles and its structural and service equipment have been examined and found to be in good working order; and

(d) unless the required certification, retest, and filling markings are legible.

4.2.4.7 Empty MEGCs that have not been cleaned and purged shall comply with the same requirements as MEGCs filled with the previous substance.

4.2.5 Portable tank instructions and special provisions

4.2.5.1 *General*

4.2.5.1.1 This section includes the portable tank instructions and special provisions applicable to dangerous goods authorized to be carried in portable tanks. Each portable tank instruction is identified by an alpha-numeric code (e.g. T1). Column (10) of Table A of Chapter 3.2 indicates the portable tank instruction that shall be used for each substance permitted for carriage in a portable tank. When no portable tank instruction appears in Column (10) for a specific dangerous goods entry then carriage of the substance in portable tanks is not permitted unless a competent authority approval is granted as detailed in 6.7.1.3. Portable tank special provisions are assigned to specific dangerous goods in Column (11) of Table A of Chapter 3.2. Each portable tank special provision is identified by an alpha-numeric code (e.g. TP1). A listing of the portable tank special provisions is provided in 4.2.5.3.

4.2.5.2 *Portable tank instructions*

4.2.5.2.1 Portable tank instructions apply to dangerous goods of Classes 1 to 9. Portable tank instructions provide specific information relevant to portable tanks provisions applicable to specific substances. These provisions shall be met in addition to the general provisions in this Chapter and the general requirements in Chapter 6.7.

4.2.5.2.2 For substances of Class 1 and Classes 3 to 9, the portable tank instructions indicate the applicable minimum test pressure, the minimum shell thickness (in reference steel), bottom opening requirements and pressure relief requirements. In portable tank instruction T23, self-reactive substances of Class 4.1 and Class 5.2 organic peroxides permitted to be carried in portable tanks are listed along with the applicable control and emergency temperatures.

4.2.5.2.3 Non-refrigerated liquefied gases are assigned to portable tank instruction T50. T50 provides the maximum allowable working pressures, the requirements for the openings below liquid level, pressure-relief requirements and maximum filling density requirements for non-refrigerated liquefied gases permitted for carriage in portable tanks.

4.2.5.2.4 Refrigerated liquefied gases are assigned to portable tank instruction T75.

4.2.5.2.5 *Determination of the appropriate portable tank instructions*

When a specific portable tank instruction is specified in Column (10) of Table A of Chapter 3.2 for a specific dangerous goods entry additional portable tanks which possess higher minimum test pressures, greater shell thicknesses, more stringent bottom opening and pressure-relief device arrangements may be used. The following guidelines apply to determining the appropriate portable tanks which may be used for carriage of particular substances:

Portable tank instruction specified	**Portable tank instructions also permitted**
T1	T2, T3, T4, T5, T6, T7, T8, T9, T10, T11, T12, T13, T14, T15, T16, T17, T18, T19, T20, T21, T22
T2	T4, T5, T7, T8, T9, T10, T11, T12, T13, T14, T15, T16, T17, T18, T19, T20, T21, T22
T3	T4, T5, T6, T7, T8, T9, T10, T11, T12, T13, T14, T15, T16, T17, T18, T19, T20, T21, T22
T4	T5, T7, T8, T9, T10, T11, T12, T13, T14, T15, T16, T17, T18, T19, T20, T21, T22
T5	T10, T14, T19, T20, T22
T6	T7, T8, T9, T10, T11, T12, T13, T14, T15, T16, T17, T18, T19, T20, T21, T22
T7	T8, T9, T10, T11, T12, T13, T14, T15, T16, T17, T18, T19, T20, T21, T22
T8	T9, T10, T13, T14, T19, T20, T21, T22
T9	T10, T13, T14, T19, T20, T21, T22
T10	T14, T19, T20, T22
T11	T12, T13, T14, T15, T16, T17, T18, T19, T20, T21, T22
T12	T14, T16, T18, T19, T20, T22
T13	T14, T19, T20, T21, T22
T14	T19, T20, T22
T15	T16, T17, T18, T19, T20, T21, T22
T16	T18, T19, T20, T22
T17	T18, T19, T20, T21, T22
T18	T19, T20, T22
T19	T20, T22
T20	T22
T21	T22
T22	None
T23	None

4.2.5.2.6 *Portable tank instructions*

Portable tank instructions specify the requirements applicable to a portable tank when used for the carriage of specific substances. Portable tank instructions T1 to T22 specify the applicable minimum test pressure, the minimum shell thickness (in mm reference steel), and the pressure-relief and bottom-opening requirements.

T1 - T22 PORTABLE TANK INSTRUCTIONS T1 - T22

These portable tank instructions apply to liquid and solid substances of Classes 3 to 9. The general provisions of Section 4.2.1 and the requirements of Section 6.7.2 shall be met.

Portable tank instruction	Minimum test pressure (bar)	Minimum shell thickness (in mm-reference steel) (see 6.7.2.4)	Pressure-relief requirements[a] (see 6.7.2.8)	Bottom opening requirements (see 6.7.2.6)
T1	1.5	See 6.7.2.4.2	Normal	See 6.7.2.6.2
T2	1.5	See 6.7.2.4.2	Normal	See 6.7.2.6.3
T3	2.65	See 6.7.2.4.2	Normal	See 6.7.2.6.2
T4	2.65	See 6.7.2.4.2	Normal	See 6.7.2.6.3
T5	2.65	See 6.7.2.4.2	See 6.7.2.8.3	Not allowed
T6	4	See 6.7.2.4.2	Normal	See 6.7.2.6.2
T7	4	See 6.7.2.4.2	Normal	See 6.7.2.6.3
T8	4	See 6.7.2.4.2	Normal	Not allowed
T9	4	6mm	Normal	Not allowed
T10	4	6mm	See 6.7.2.8.3	Not allowed
T11	6	See 6.7.2.4.2	Normal	See 6.7.2.6.3
T12	6	See 6.7.2.4.2	See 6.7.2.8.3	See 6.7.2.6.3
T13	6	6mm	Normal	Not allowed
T14	6	6mm	See 6.7.2.8.3	Not allowed
T15	10	See 6.7.2.4.2	Normal	See 6.7.2.6.3
T16	10	See 6.7.2.4.2	See 6.7.2.8.3	See 6.7.2.6.3
T17	10	6mm	Normal	See 6.7.2.6.3
T18	10	6mm	See 6.7.2.8.3	See 6.7.2.6.3
T19	10	6mm	See 6.7.2.8.3	Not allowed
T20	10	8mm	See 6.7.2.8.3	Not allowed
T21	10	10mm	Normal	Not allowed
T22	10	10mm	See 6.7.2.8.3	Not allowed

[a] *When the word "Normal" is indicated, all the requirements of 6.7.2.8 apply except for 6.7.2.8.3.*

T23	PORTABLE TANK INSTRUCTION							T23
This portable tank instruction applies to self-reactive substances of Class 4.1 and organic peroxides of Class 5.2. The general provisions of Section 4.2.1 and the requirements of Section 6.7.2 shall be met. The additional provisions specific to self-reactive substances of Class 4.1 and organic peroxides of Class 5.2 in 4.2.1.13 shall also be met.								
UN No.	**Substance**	**Minimum test pressure (bar)**	**Minimum shell thickness (mm-reference steel)**	**Bottom opening requi-rements**	**Pressure-relief requi-rements**	**Degree of filling**	**Control tempe-rature**	**Emergency temperature**
3109	ORGANIC PEROXIDE, TYPE F, LIQUID tert-Butyl hydro-peroxide[a], not more than 72% with water Cumyl hydro-peroxide, not more than 90% in diluent type A Di-tert-butyl peroxide, not more than 32% in diluent type A Isopropyl cumyl hydro-peroxide, not more than 72% in diluent type A p-Menthyl hydro-peroxide, not more than 72% in diluent type A Pinanyl hydro-peroxide, not more than 56% in diluent type A	4	See 6.7.2.4.2	See 6.7.2.6.3	See 6.7.2.8.2 4.2.1.13.6 4.2.1.13.7 4.2.1.13.8	See 4.2.1.13.13		
3110	ORGANIC PEROXIDE TYPE F, SOLID Dicumyl peroxide [b]	4	See 6.7.2.4.2	See 6.7.2.6.3	See 6.7.2.8.2 4.2.1.13.6 4.2.1.13.7 4.2.1.13.8	See 4.2.1.13.13		
3119	ORGANIC PEROXIDE, TYPE F, LIQUID, TEMPERATURE CONTROLLED	4	See 6.7.2.4.2	See 6.7.2.6.3	See 6.7.2.8.2 4.2.1.13.6 4.2.1.13.7 4.2.1.13.8	See 4.2.1.13.13	[c]	[c]
	tert-Butyl peroxyacetate, not more than 32% in diluent type B						+30 °C	+35 °C
	tert-Butyl peroxy-2-ethylhexanoate, not more than 32% in diluent type B						+15 °C	+20 °C

[a] *Provided that steps have been taken to achieve the safety equivalence of 65% tert-Butyl hydroperoxide and 35% water.*

[b] *Maximum quantity per portable tank: 2000 kg.*

[c] *As approved by the competent authority.*

This portable tank instruction applies to self-reactive substances of Class 4.1 and organic peroxides of Class 5.2. The general provisions of Section 4.2.1 and the requirements of Section 6.7.2 shall be met. The additional provisions specific to self-reactive substances of Class 4.1 and organic peroxides of Class 5.2 in 4.2.1.13 shall also be met.

UN No.	Substance	Minimum test pressure (bar)	Minimum shell thickness (mm-reference steel)	Bottom opening requi-rements	Pressure-relief requi-rements	Degree of filling	Control tempe-rature	Emergency temperature
3119 *(Cont'd)*	tert-Butyl peroxypivalate, not more than 27% in diluent type B						+5 °C	+10 °C
	tert-Butyl peroxy-3,5,5-trimethyl-hexanoate, not more than 32% in diluent type B						+35 °C	+40 °C
	Di-(3,5,5-trimethyl-hexanoyl) peroxide, not more than 38% in diluent type A						0 °C	+5 °C
	Peroxyacetic acid, distilled, type F, stabilized [d]						+30 °C	+35 °C
3120	ORGANIC PEROXIDE, TYPE F, SOLID, TEMPERATURE CONTROLLED	4	See 6.7.2.4.2	See 6.7.2.6.3	See 6.7.2.8.2 4.2.1.13.6 4.2.1.13.7 4.2.1.13.8	See 4.2.1.13.13	[c]	[c]
3229	SELF-REACTIVE LIQUID TYPE F	4	See 6.7.2.4.2	See 6.7.2.6.3	See 6.7.2.8.2 4.2.1.13.6 4.2.1.13.7 4.2.1.13.8	See 4.2.1.13.13		
3230	SELF-REACTIVE SOLID TYPE F	4	See 6.7.2.4.2	See 6.7.2.6.3	See 6.7.2.8.2 4.2.1.13.6 4.2.1.13.7 4.2.1.13.8	See 4.2.1.13.13		
3239	SELF-REACTIVE LIQUID TYPE F, TEMPERATURE CONTROLLED	4	See 6.7.2.4.2	See 6.7.2.6.3	See 6.7.2.8.2 4.2.1.13.6 4.2.1.13.7 4.2.1.13.8	See 4.2.1.13.13	[c]	[c]
3240	SELF-REACTIVE SOLID TYPE F, TEMPERATURE CONTROLLED	4	See 6.7.2.4.2	See 6.7.2.6.3	See 6.7.2.8.2 4.2.1.13.6 4.2.1.13.7 4.2.1.13.8	See 4.2.1.13.13	[c]	[c]

[c] *As approved by the competent authority.*

[d] *Formulation derived from distillation of peroxyacetic acid originating from peroxyacetic acid in concentration of not more than 41% with water, total active oxygen (Peroxyacetic acid+H_2O_2) ≤ 9.5%, which fulfils the criteria of the Manual of Tests and Criteria, paragraph 20.4.3 (f).*

T50	PORTABLE TANK INSTRUCTION				T50
This portable tank instruction applies to non-refrigerated liquefied gases. The general provisions of Section 4.2.2 and the requirements of Section 6.7.3 shall be met.					
UN No.	**Non-refrigerated liquefied gases**	**Max. allowable working pressure (bar): Small; Bare; Sunshield; Insulated; respectively[a]**	**Openings below liquid level**	**Pressure- relief requirements[b] (see 6.7.3.7)**	**Maximum filling density (kg/l)**
1005	Ammonia, anhydrous	29.0 25.7 22.0 19.7	Allowed	See 6.7.3.7.3	0.53
1009	Bromotrifluoromethane (Refrigerant gas R 13B1)	38.0 34.0 30.0 27.5	Allowed	Normal	1.13
1010	Butadienes, stabilized	7.5 7.0 7.0 7.0	Allowed	Normal	0.55
1010	Butadienes and hydrocarbon mixture, stabilized	See MAWP definition in 6.7.3.1	Allowed	Normal	See 4.2.2.7
1011	Butane	7.0 7.0 7.0 7.0	Allowed	Normal	0.51
1012	Butylene	8.0 7.0 7.0 7.0	Allowed	Normal	0.53
1017	Chlorine	19.0 17.0 15.0 13.5	Not Allowed	See 6.7.3.7.3	1.25
1018	Chlorodifluoromethane (Refrigerant gas R 22)	26.0 24.0 21.0 19.0	Allowed	Normal	1.03
1020	Chloropentafluoroethane (Refrigerant gas R 115)	23.0 20.0 18.0 16.0	Allowed	Normal	1.06
1021	1-Chloro-1,2,2,2-tetrafluoroethane (Refrigerant gas R 124)	10.3 9.8 7.9 7.0	Allowed	Normal	1.20
1027	Cyclopropane	18.0 16.0 14.5 13.0	Allowed	Normal	0.53

[a] *"Small" means tanks having a shell with a diameter of 1.5 m or less; "Bare" means tanks having a shell with a diameter of more than 1.5 m without insulation or sun shield (see 6.7.3.2.12); "Sunshield" means tanks having a shell with a diameter of more than 1.5 m with sun shield (see 6.7.3.2.12); "Insulated" means tanks having a shell with a diameter of more than 1.5 m with insulation (see 6.7.3.2.12); (See definition of "Design reference temperature" in 6.7.3.1).*

[b] *The word "Normal" in the pressure relief requirements column indicates that a frangible disc as specified in 6.7.3.7.3 is not required.*

This portable tank instruction applies to non-refrigerated liquefied gases. The general provisions of Section 4.2.2 and the requirements of Section 6.7.3 shall be met.

UN No.	Non-refrigerated liquefied gases	Max. allowable working pressure (bar): Small; Bare; Sunshield; Insulated; respectively[a]	Openings below liquid level	Pressure- relief requirements[b] (see 6.7.3.7)	Maximum filling density (kg/l)
1028	Dichlorodifluoromethane (Refrigerant gas R 12)	16.0 15.0 13.0 11.5	Allowed	Normal	1.15
1029	Dichlorofluoromethane (Refrigerant gas R 21)	7.0 7.0 7.0 7.0	Allowed	Normal	1.23
1030	1,1-Difluoroethane (Refrigerant gas R 152a)	16.0 14.0 12.4 11.0	Allowed	Normal	0.79
1032	Dimethylamine, anhydrous	7.0 7.0 7.0 7.0	Allowed	Normal	0.59
1033	Dimethyl ether	15.5 13.8 12.0 10.6	Allowed	Normal	0.58
1036	Ethylamine	7.0 7.0 7.0 7.0	Allowed	Normal	0.61
1037	Ethyl chloride	7.0 7.0 7.0 7.0	Allowed	Normal	0.80
1040	Ethylene oxide with nitrogen up to a total pressure of 1MPa (10 bar) at 50 °C	- - - 10.0	Not Allowed	See 6.7.3.7.3	0.78
1041	Ethylene oxide and carbon dioxide mixture with more than 9% but not more than 87% ethylene oxide	See MAWP definition in 6.7.3.1	Allowed	Normal	See 4.2.2.7
1055	Isobutylene	8.1 7.0 7.0 7.0	Allowed	Normal	0.52

[a] *"Small" means tanks having a shell with a diameter of 1.5 m or less; "Bare" means tanks having a shell with a diameter of more than 1.5 m without insulation or sun shield (see 6.7.3.2.12); "Sunshield" means tanks having a shell with a diameter of more than 1.5 m with sun shield (see 6.7.3.2.12); "Insulated" means tanks having a shell with a diameter of more than 1.5 m with insulation (see 6.7.3.2.12); (See definition of "Design reference temperature" in 6.7.3.1).*

[b] *The word "Normal" in the pressure relief requirements column indicates that a frangible disc as specified in 6.7.3.7.3 is not required.*

This portable tank instruction applies to non-refrigerated liquefied gases. The general provisions of Section 4.2.2 and the requirements of Section 6.7.3 shall be met.

UN No.	Non-refrigerated liquefied gases	Max. allowable working pressure (bar): Small; Bare; Sunshield; Insulated respectively[a]	Openings below liquid level	Pressure- relief requirements[b] (see 6.7.3.7)	Maximum filling density (kg/l)
1060	Methyllacetylene and propadiene mixture, stabilized	28.0 24.5 22.0 20.0	Allowed	Normal	0.43
1061	Methylamine, anhydrous	10.8 9.6 7.8 7.0	Allowed	Normal	0.58
1062	Methyl bromide with not more than 2% chloropicrin	7.0 7.0 7.0 7.0	Not Allowed	See 6.7.3.7.3	1.51
1063	Methyl chloride (Refrigerant gas R 40)	14.5 12.7 11.3 10.0	Allowed	Normal	0.81
1064	Methyl mercaptan	7.0 7.0 7.0 7.0	Not Allowed	See 6.7.3.7.3	0.78
1067	Dinitrogen tetroxide	7.0 7.0 7.0 7.0	Not Allowed	See 6.7.3.7.3	1.30
1075	Petroleum gases, liquefied	See MAWP definition in 6.7.3.1	Allowed	Normal	See 4.2.2.7
1077	Propylene	28.0 24.5 22.0 20.0	Allowed	Normal	0.43
1078	Refrigerant gas, n.o.s.	See MAWP definition in 6.7.3.1	Allowed	Normal	See 4.2.2.7
1079	Sulphur dioxide	11.6 10.3 8.5 7.6	Not Allowed	See 6.7.3.7.3	1.23
1082	Trifluorochloroethylene, stabilized (Refrigerant gas R 1113)	17.0 15.0 13.1 11.6	Not Allowed	See 6.7.3.7.3	1.13

[a] *"Small" means tanks having a shell with a diameter of 1.5 m or less; "Bare" means tanks having a shell with a diameter of more than 1.5 m without insulation or sun shield (see 6.7.3.2.12); "Sunshield" means tanks having a shell with a diameter of more than 1.5 m with sun shield (see 6.7.3.2.12); "Insulated" means tanks having a shell with a diameter of more than 1.5 m with insulation (see 6.7.3.2.12); (See definition of "Design reference temperature" in 6.7.3.1).*

[b] *The word "Normal" in the pressure relief requirements column indicates that a frangible disc as specified in 6.7.3.7.3 is not required.*

This portable tank instruction applies to non-refrigerated liquefied gases. The general provisions of Section 4.2.2 and the requirements of Section 6.7.3 shall be met.

UN No.	Non-refrigerated liquefied gases	Max. allowable working pressure (bar): Small; Bare; Sunshield; Insulated respectively[a]	Openings below liquid level	Pressure- relief requirements[b] (see 6.7.3.7)	Maximum filling density (kg/l)
1083	Trimethylamine, anhydrous	7.0 7.0 7.0 7.0	Allowed	Normal	0.56
1085	Vinyl bromide, stabilized	7.0 7.0 7.0 7.0	Allowed	Normal	1.37
1086	Vinyl chloride, stabilized	10.6 9.3 8.0 7.0	Allowed	Normal	0.81
1087	Vinyl methyl ether, stabilized	7.0 7.0 7.0 7.0	Allowed	Normal	0.67
1581	Chloropicrin and methyl bromide mixture with more than 2% chloropicrin	7.0 7.0 7.0 7.0	Not Allowed	See 6.7.3.7.3	1.51
1582	Chloropicrin and methyl chloride mixture	19.2 16.9 15.1 13.1	Not Allowed	See 6.7.3.7.3	0.81
1858	Hexafluoropropylene (Refrigerant gas R 1216)	19.2 16.9 15.1 13.1	Allowed	Normal	1.11
1912	Methyl chloride and methylene chloride mixture	15.2 13.0 11.6 10.1	Allowed	Normal	0.81
1958	1,2-Dichloro-1,1,2,2-tetrafluoroethane (Refrigerant gas R 114)	7.0 7.0 7.0 7.0	Allowed	Normal	1.30
1965	Hydrocarbon gas, mixture liquefied, n.o.s.	See MAWP definition in 6.7.3.1	Allowed	Normal	See 4.2.2.7
1969	Isobutane	8.5 7.5 7.0 7.0	Allowed	Normal	0.49

[a] *"Small" means tanks having a shell with a diameter of 1.5 m or less; "Bare" means tanks having a shell with a diameter of more than 1.5 m without insulation or sun shield (see 6.7.3.2.12); "Sunshield" means tanks having a shell with a diameter of more than 1.5 m with sun shield (see 6.7.3.2.12); "Insulated" means tanks having a shell with a diameter of more than 1.5 m with insulation (see 6.7.3.2.12); (See definition of "Design reference temperature" in 6.7.3.1).*

[b] *The word "Normal" in the pressure relief requirements column indicates that a frangible disc as specified in 6.7.3.7.3 is not required.*

This portable tank instruction applies to non-refrigerated liquefied gases. The general provisions of Section 4.2.2 and the requirements of Section 6.7.3 shall be met.

UN No.	Non-refrigerated liquefied gases	Max. allowable working pressure (bar): Small; Bare; Sunshield; Insulated respectively[a]	Openings below liquid level	Pressure- relief requirements[b] (see 6.7.3.7)	Maximum filling density (kg/l)
1973	Chlorodifluoromethane and chloropentafluoroethane mixture with fixed boiling point, with approximately 49% chlorodifluoromethane (Refrigerant gas R 502)	28.3 25.3 22.8 20.3	Allowed	Normal	1.05
1974	Chlorodifluorobromomethane (Refrigerant gas R 12B1)	7.4 7.0 7.0 7.0	Allowed	Normal	1.61
1976	Octafluorocyclobutane (Refrigerant gas RC 318)	8.8 7.8 7.0 7.0	Allowed	Normal	1.34
1978	Propane	22.5 20.4 18.0 16.5	Allowed	Normal	0.42
1983	1-Chloro-2,2,2-trifluoroethane (Refrigerant gas R 133a)	7.0 7.0 7.0 7.0	Allowed	Normal	1.18
2035	1,1,1-Trifluoroethane (Refrigerant gas R 143a)	31.0 27.5 24.2 21.8	Allowed	Normal	0.76
2424	Octafluoropropane (Refrigerant gas R 218)	23.1 20.8 18.6 16.6	Allowed	Normal	1.07
2517	1-Chloro-1,1-difluoroethane (Refrigerant gas R 142b)	8.9 7.8 7.0 7.0	Allowed	Normal	0.99
2602	Dichlorodifluoromethane and 1,1-difluoroethane azeotropic mixture with approximately 74% dichlorodifluoromethane (Refrigerant gas R 500)	20.0 18.0 16.0 14.5	Allowed	Normal	1.01

[a] *"Small" means tanks having a shell with a diameter of 1.5 m or less; "Bare" means tanks having a shell with a diameter of more than 1.5 m without insulation or sun shield (see 6.7.3.2.12); "Sunshield" means tanks having a shell with a diameter of more than 1.5 m with sun shield (see 6.7.3.2.12); "Insulated" means tanks having a shell with a diameter of more than 1.5 m with insulation (see 6.7.3.2.12); (See definition of "Design reference temperature" in 6.7.3.1).*

[b] *The word "Normal" in the pressure relief requirements column indicates that a frangible disc as specified in 6.7.3.7.3 is not required.*

This portable tank instruction applies to non-refrigerated liquefied gases. The general provisions of Section 4.2.2 and the requirements of Section 6.7.3 shall be met.

UN No.	Non-refrigerated liquefied gases	Max. allowable working pressure (bar): Small; Bare; Sunshield; Insulated; respectively[a]	Openings below liquid level	Pressure- relief requirements[b] (see 6.7.3.7)	Maximum filling density (kg/l)
3057	Trifluoroacetyl chloride	14.6 12.9 11.3 9.9	Not allowed	6.7.3.7.3	1.17
3070	Ethylene oxide and dichlorodifluoromethane mixture with not more than 12.5% ethylene oxide	14.0 12.0 11.0 9.0	Allowed	6.7.3.7.3	1.09
3153	Perfluoro (methyl vinyl ether)	14.3 13.4 11.2 10.2	Allowed	Normal	1.14
3159	1,1,1,2-Tetrafluoroethane (Refrigerant gas R 134a)	17.7 15.7 13.8 12.1	Allowed	Normal	1.04
3161	Liquefied gas, flammable, n.o.s.	See MAWP definition in 6.7.3.1	Allowed	Normal	See 4.2.2.7
3163	Liquefied gas, n.o.s.	See MAWP definition in 6.7.3.1	Allowed	Normal	See 4.2.2.7
3220	Pentafluoroethane (Refrigerant gas R 125)	34.4 30.8 27.5 24.5	Allowed	Normal	0.95
3252	Difluoromethane (Refrigerant gas R 32)	43.0 39.0 34.4 30.5	Allowed	Normal	0.78
3296	Heptafluoropropane (Refrigerant gas R 227)	16.0 14.0 12.5 11.0	Allowed	Normal	1.20
3297	Ethylene oxide and chlorotetrafluoroethane mixture, with not more than 8.8% ethylene oxide	8.1 7.0 7.0 7.0	Allowed	Normal	1.16

[a] *"Small" means tanks having a shell with a diameter of 1.5 m or less; "Bare" means tanks having a shell with a diameter of more than 1.5 m without insulation or sun shield (see 6.7.3.2.12); "Sunshield" means tanks having a shell with a diameter of more than 1.5 m with sun shield (see 6.7.3.2.12); "Insulated" means tanks having a shell with a diameter of more than 1.5 m with insulation (see 6.7.3.2.12); (See definition of "Design reference temperature" in 6.7.3.1).*

[b] *The word "Normal" in the pressure relief requirements column indicates that a frangible disc as specified in 6.7.3.7.3 is not required.*

T50 PORTABLE TANK INSTRUCTION (cont'd) T50

This portable tank instruction applies to non-refrigerated liquefied gases. The general provisions of Section 4.2.2 and the requirements of Section 6.7.3 shall be met.

UN No.	Non-refrigerated liquefied gases	Max. allowable working pressure (bar): Small; Bare; Sunshield; Insulated; respectively[a]	Openings below liquid level	Pressure- relief requirements[b] (see 6.7.3.7)	Maximum filling density (kg/l)
3298	Ethylene oxide and pentafluoroethane mixture, with not more than 7.9% ethylene oxide	25.9 23.4 20.9 18.6	Allowed	Normal	1.02
3299	Ethylene oxide and tetrafluoroethane mixture, with not more than 5.6% ethylene oxide	16.7 14.7 12.9 11.2	Allowed	Normal	1.03
3318	Ammonia solution, relative density less than 0.880 at 15 °C in water, with more than 50% ammonia	See MAWP definition in 6.7.3.1	Allowed	See 6.7.3.7.3	See 4.2.2.7
3337	Refrigerant gas R 404A	31.6 28.3 25.3 22.5	Allowed	Normal	0.84
3338	Refrigerant gas R 407A	31.3 28.1 25.1 22.4	Allowed	Normal	0.95
3339	Refrigerant gas R 407B	33.0 29.6 26.5 23.6	Allowed	Normal	0.95
3340	Refrigerant gas R 407C	29.9 26.8 23.9 21.3	Allowed	Normal	0.95

T75 PORTABLE TANK INSTRUCTION T75

This portable tank instruction applies to refrigerated liquefied gases. The general provisions of Section 4.2.3 and the requirements of Section 6.7.4 shall be met.

[a] *"Small" means tanks having a shell with a diameter of 1.5 m or less; "Bare" means tanks having a shell with a diameter of more than 1.5 m without insulation or sun shield (see 6.7.3.2.12); "Sunshield" means tanks having a shell with a diameter of more than 1.5 m with sun shield (see 6.7.3.2.12); "Insulated" means tanks having a shell with a diameter of more than 1.5 m with insulation (see 6.7.3.2.12); (See definition of "Design reference temperature" in 6.7.3.1).*

[b] *The word "Normal" in the pressure relief requirements column indicates that a frangible disc as specified in 6.7.3.7.3 is not required.*

4.2.5.3 *Portable tank special provisions*

Portable tank special provisions are assigned to certain substances to indicate provisions which are in addition to or in lieu of those provided by the portable tank instructions or the requirements in Chapter 6.7. Portable tank special provisions are identified by an alpha numeric code beginning with the letters "TP" (tank provision) and are assigned to specific substances in Column (11) of Table A of Chapter 3.2. The following is a list of the portable tank special provisions:

TP1 The degree of filling prescribed in 4.2.1.9.2 shall not be exceeded.

$$(\text{Degree of filling} = \frac{97}{1 + \alpha\,(t_r - t_f)})$$

TP2 The degree of filling prescribed in 4.2.1.9.3 shall not be exceeded.

$$(\text{Degree of filling} = \frac{95}{1 + \alpha\,(t_r - t_f)})$$

TP3 The maximum degree of filling (in %) for solids carried above their melting point and for elevated temperature liquids shall be determined in accordance with 4.2.1.9.5.

$$(\text{Degree of filling} = 95\,\frac{d_r}{d_f})$$

TP4 The degree of filling shall not exceed 90% or, alternatively, any other value approved by the competent authority (see 4.2.1.15.2).

TP5 The degree of filling prescribed in 4.2.3.6 shall be met.

TP6 To prevent the tank bursting in any event, including fire engulfment, it shall be provided with pressure-relief devices which are adequate in relation to the capacity of the tank and to the nature of the substance carried. The device shall also be compatible with the substance.

TP7 Air shall be eliminated from the vapour space by nitrogen or other means.

TP8 The test pressure may be reduced to 1.5 bar when the flash point of the substances carried is greater than 0 °C.

TP9 A substance under this description shall only be carried in a portable tank under an approval granted by the competent authority.

TP10 A lead lining, not less than 5 mm thick, which shall be tested annually, or another suitable lining material approved by the competent authority is required.

TP12 This substance is highly corrosive to steel.

TP13 *(Reserved)*

TP16 The tank shall be fitted with a special device to prevent under-pressure and excess pressure during normal carriage conditions. This device shall be approved by the competent authority.

Pressure-relief requirements are as indicated in 6.7.2.8.3 to prevent crystallization of the product in the pressure-relief valve.

TP17 Only inorganic non-combustible materials shall be used for thermal insulation of the tank.

TP18 Temperature shall be maintained between 18 °C and 40 °C. Portable tanks containing solidified methacrylic acid shall not be reheated during carriage.

TP19 The calculated shell thickness shall be increased by 3 mm. Shell thickness shall be verified ultrasonically at intervals midway between periodic hydraulic tests.

TP20 This substance shall only be carried in insulated tanks under a nitrogen blanket.

TP21 The shell thickness shall be not less than 8 mm. Tanks shall be hydraulically tested and internally inspected at intervals not exceeding 2.5 years.

TP22 Lubricant for joints or other devices shall be oxygen compatible.

TP23 Carriage permitted under special conditions prescribed by the competent authorities.

TP24 The portable tank may be fitted with a device located under maximum filling conditions in the vapour space of the shell to prevent the build up of excess pressure due to the slow decomposition of the substance carried. This device shall also prevent an unacceptable amount of leakage of liquid in the case of overturning or entry of foreign matter into the tank. This device shall be approved by the competent authority or its authorized body.

TP25 Sulphur trioxide 99.95% pure and above may be carried in tanks without an inhibitor provided that it is maintained at a temperature equal to or above 32.5 °C.

TP26 When carried under heated conditions, the heating device shall be fitted outside the shell. For UN 3176 this requirement only applies when the substance reacts dangerously with water.

TP27 A portable tank having a minimum test pressure of 4 bar may be used if it is shown that a test pressure of 4 bar or less is acceptable according to the test pressure definition in 6.7.2.1.

TP28 A portable tank having a minimum test pressure of 2.65 bar may be used if it is shown that a test pressure of 2.65 bar or less is acceptable according to the test pressure definition in 6.7.2.1.

TP29 A portable tank having a minimum test pressure of 1.5 bar may be used if it is shown that a test pressure of 1.5 bar or less is acceptable according to the test pressure definition in 6.7.2.1.

TP30 This substance shall be carried in insulated tanks.

TP31 This substance may only be carried in tanks in the solid state.

TP32 For UN Nos. 0331, 0332 and 3375, portable tanks may be used subject to the following conditions:

(a) To avoid unnecessary confinement, each portable tank constructed of metal shall be fitted with a pressure-relief device that may be of the reclosing spring-loaded type, a frangible disc or a fusible element. The set to discharge or burst pressure, as applicable, shall not be greater than 2.65 bar for portable tanks with minimum test pressures greater than 4 bar.

(b) The suitability for carriage in tanks shall be demonstrated. One method to evaluate this suitability is test 8 (d) in Test Series 8 (see Manual of Tests and Criteria, Part 1, Sub-section 18.7).

(c) Substances shall not be allowed to remain in the portable tank for any period that could result in caking. Appropriate measures shall be taken to avoid accumulation and packing of substances in the tank (e.g. cleaning, etc).

TP33 The portable tank instruction assigned for this substance applies to granular and powdered solids and to solids which are filled and discharged at temperatures above their melting point which are cooled and carried as a solid mass. For solids which are carried above their melting point, see 4.2.1.18.

TP34 Portable tanks need not be subjected to the impact test in 6.7.4.14.1 if the portable tank is marked "NOT FOR RAIL TRANSPORT" on the plate specified in 6.7.4.15.1 and also in letters of at least 10 cm high on both sides of the outer jacket.

CHAPTER 4.3

USE OF FIXED TANKS (TANK-VEHICLES), DEMOUNTABLE TANKS, TANK-CONTAINERS AND TANK SWAP BODIES WITH SHELLS MADE OF METALLIC MATERIALS, AND BATTERY-VEHICLES AND MULTIPLE-ELEMENT GAS CONTAINERS (MEGCs)

***NOTE**: For portable tanks and UN multiple-element gas containers (MEGCs) see Chapter 4.2; for fibre-reinforced plastics tanks, see Chapter 4.4; for vacuum operated waste tanks, see Chapter 4.5.*

4.3.1 Scope

4.3.1.1 Provisions which take up the whole width of the page apply both to fixed tanks (tank-vehicles), demountable tanks and battery-vehicles, and to tank-containers, tank swap bodies and MEGCs. Provisions contained in a single column apply only to:

- fixed tanks (tank-vehicles), demountable tanks and battery-vehicles (left-hand column);
- tank-containers, tank swap bodies and MEGCs (right-hand column).

4.3.1.2 These provisions apply to:

fixed tanks (tank-vehicles), demountable tanks and battery-vehicles	tank-containers, tank swap bodies and MEGCs

used for the carriage of gaseous, liquid, powdery or granular substances.

4.3.1.3 Section 4.3.2 lists the provisions applicable to fixed tanks (tank-vehicles), demountable tanks, tank-containers and tank swap bodies, intended for the carriage of substances of all classes, and to battery-vehicles and MEGCs intended for the carriage of gases of Class 2. Sections 4.3.3 and 4.3.4 contain special provisions adding to or amending the provisions of Section 4.3.2.

4.3.1.4 For requirements concerning the construction, equipment, type approval, tests and marking, see Chapter 6.8.

4.3.1.5 For transitional measures concerning the application of this Chapter, see:

1.6.3.	1.6.4.

4.3.2 Provisions applicable to all classes

4.3.2.1 *Use*

4.3.2.1.1 A substance subject to ADR may be carried in fixed tanks (tank-vehicles), demountable tanks, battery-vehicles, tank-containers, tank swap bodies and MEGCs only when provision is made for a tank code according to 4.3.3.1.1 and 4.3.4.1.1 in Column (12) of Table A in Chapter 3.2.

4.3.2.1.2 The required type of tank, battery-vehicle and MEGC is given in code form in Column (12) of Table A in Chapter 3.2. The identification codes appearing there are made up of letters or

numbers in a given order. The explanations for reading the four parts of the code are given in 4.3.3.1.1 (when the substance to be carried belongs to Class 2) and in 4.3.4.1.1 (when the substance to be carried belongs to Classes 3 to 9) [1].

4.3.2.1.3 The required type according to 4.3.2.1.2 corresponds to the least stringent construction requirements which are acceptable for the dangerous substance in question unless otherwise prescribed in this Chapter or in Chapter 6.8. It is possible to use tanks corresponding to codes prescribing a higher minimum calculation pressure, or more stringent requirements for filling or discharge openings or for safety valves/devices (see 4.3.3.1.1 for Class 2 and 4.3.4.1.1 for Classes 3 to 9).

4.3.2.1.4 For certain substances, tanks, battery-vehicles or MEGCs are subject to additional provisions which are included as special provisions in Column (13) of Table A in Chapter 3.2.

4.3.2.1.5 Tanks, battery-vehicles and MEGCs shall not be loaded with any dangerous substances other than those for the carriage of which they have been approved according to 6.8.2.3.1 and which, in contact with the materials of the shell, gaskets, equipment and protective linings, are not liable to react dangerously with them (see "dangerous reaction" in 1.2.1), to form dangerous products or appreciably to weaken these materials [2].

4.3.2.1.6 Foodstuffs shall not be carried in tanks used for dangerous substances unless the necessary steps have been taken to prevent any harm to public health.

4.3.2.2 ***Degree of filling***

4.3.2.2.1 The following degrees of filling shall not be exceeded in tanks intended for the carriage of liquids at ambient temperatures:

(a) for flammable substances without additional risks (e.g. toxicity or corrosivity), in tanks with a venting system or with safety valves (even where preceded by a bursting disc):

$$\text{Degree of filling} = \frac{100}{1 + \alpha\,(50 - t_F)}\ \%\ \text{of capacity}$$

(b) for toxic or corrosive substances (whether flammable or not) in tanks with a venting system or with safety valves (even where preceded by a bursting disc):

$$\text{Degree of filling} = \frac{98}{1 + \alpha\,(50 - t_F)}\ \%\ \text{of capacity}$$

(c) for flammable substances and for slightly toxic or corrosive substances (whether flammable or not) in hermetically closed tanks without a safety device:

$$\text{Degree of filling} = \frac{97}{1 + \alpha\,(50 - t_F)}\ \%\ \text{of capacity}$$

---

[1] *An exception is made for tanks intended for the carriage of substances of classes 5.2 or 7 (see 4.3.4.1.3).*

[2] *It may be necessary to consult the manufacturer of the substance and the competent authority for guidance on the compatibility of the substance with the materials of the tank, battery-vehicle or MEGC.*

(d) for highly toxic, toxic, highly corrosive or corrosive substances (whether flammable or not) in hermetically closed tanks without a safety device:

$$\text{Degree of filling} = \frac{95}{1 + \alpha\,(50 - t_F)}\ \%\ \text{of capacity}$$

4.3.2.2.2 In these formulae, α is the mean coefficient of cubical expansion of the liquid between 15 °C and 50 °C, i.e. for a maximum variation in temperature of 35 °C.

α is calculated by the formula:

$$\alpha = \frac{d_{15} - d_{50}}{35 d_{50}}$$

where d_{15} and d_{50} are the relative densities of the liquid at 15 °C and 50 °C respectively. t_F is the mean temperature of the liquid during filling.

4.3.2.2.3 The provisions of 4.3.2.2.1 (a) to (d) above shall not apply to tanks whose contents are, by means of a heating device, maintained at a temperature above 50 °C during carriage. In this case the degree of filling at the outset shall be such, and the temperature so regulated, that the tank is not full to more than 95% of its capacity and that the filling temperature is not exceeded, at any time during carriage.

4.3.2.2.4 Where shells intended for the carriage of liquids [3] are not divided by partitions or surge plates into sections of not more than 7 500 litres capacity, they shall be filled to not less than 80% or not more than 20% of their capacity.

4.3.2.3 ***Operation***

4.3.2.3.1 The thickness of the walls of the shell shall not, throughout its use, fall below the minimum figure prescribed in:

6.8.2.1.17 to 6.8.2.1.21.	6.8.2.1.17 to 6.8.1.20.

4.3.2.3.2

	During carriage tank-containers/MEGCs shall be loaded on the carrying vehicle in such a way as to be adequately protected by the fittings of the carrying vehicle or of the tank-container/MEGC itself against lateral and longitudinal impact and against overturning [4]. If the tank-containers/MEGCs, including the service equipment, are so constructed as to withstand impact or overturning they need not be protected in this way.

[3] *Under this provision, substances whose kinematic viscosity at 20 °C is below 2 680 mm²/s shall be deemed to be liquids.*

[4] *Examples of protection of shells:*

- *protection against lateral impact may, for example, consist of longitudinal bars protecting the shell on both sides at the level of the median line;*
- *protection against overturning may, for example, consist of reinforcing rings or bars fixed transversally in relation to the frame;*
- *protection against rear impact, may, for example, consist of a bumper or frame.*

4.3.2.3.3 During filling and discharge of tanks, battery-vehicles and MEGCs, appropriate measures shall be taken to prevent the release of dangerous quantities of gases and vapours. Tanks, battery-vehicles and MEGCs shall be closed so that the contents cannot spill out uncontrolled. The openings of bottom-discharge tanks shall be closed by means of screw-threaded plugs, blank flanges or other equally effective devices. The leakproofness of the closures of the tanks, and of the battery-vehicles and MEGCs shall be checked by the filler after the tank is filled. This applies in particular to the upper part of the dip tube.

4.3.2.3.4 Where several closure systems are fitted in series, that nearest to the substance being carried shall be closed first.

4.3.2.3.5 No dangerous residue of the filling substance shall adhere to the outside of the tank during carriage.

4.3.2.3.6 Substances which may react dangerously with each other shall not be carried in adjoining compartments of tanks.

Substances which may react dangerously with each other may be carried in adjoining compartments of tanks, when these compartments are separated by a partition with a wall thickness equal to or greater than that of the tank itself. They may also be carried separated by an empty space or an empty compartment between loaded compartments.

4.3.2.4 ***Empty tanks, battery-vehicles and MEGCs, uncleaned***

NOTE*: For empty tanks, battery-vehicles and MEGCs, uncleaned, special provisions TU1, TU2, TU4, TU16 and TU35 of 4.3.5 may apply.*

4.3.2.4.1 No dangerous residue of the filling substance shall adhere to the outside of the tank during carriage.

4.3.2.4.2 To be accepted for carriage, empty tanks, battery-vehicles and MEGCs, uncleaned, shall be closed in the same manner and be leakproof to the same degree as if they were full.

4.3.2.4.3 Where empty tanks, battery-vehicles and MEGCs, uncleaned, are not closed in the same manner and are not leakproof to the same degree as if they were full and where the provisions of ADR cannot be complied with, they shall be carried, with due regard to adequate safety, to the nearest suitable place where cleaning or repair can be carried out. Carriage is adequately safe if suitable measures have been taken to ensure equivalent safety commensurate with the provisions of ADR and to prevent the uncontrolled release of the dangerous goods.

4.3.2.4.4 Empty fixed tanks (tank-vehicles), demountable tanks, battery-vehicles, tank-containers, tank swap bodies and MEGCs, uncleaned, may also be carried after the expiry of the periods established in 6.8.2.4.2 and 6.8.2.4.3 for undergoing the inspection.

4.3.3 Special provisions applicable to Class 2

4.3.3.1 *Coding and hierarchy of tanks*

4.3.3.1.1 *Coding of tanks, battery-vehicles and MEGCs*

The four parts of the codes (tank codes) given in Column (12) of Table A in Chapter 3.2 have the following meanings:

Part	Description	Tank Code
1	Types of tank, battery-vehicle or MEGC	C = tank, battery-vehicle or MEGC for compressed gases; P = tank, battery-vehicle or MEGC for liquefied gases or dissolved gases; R = tank for refrigerated liquefied gases.
2	Calculation pressure	X = value of the minimum relevant test pressure according to the table in 4.3.3.2.5; or 22 = minimum calculation pressure in bar.
3	Openings (see 6.8.2.2 and 6.8.3.2)	B = tank with bottom filling or discharge openings with 3 closures; or battery-vehicle or MEGC with openings below the surface of the liquid or for compressed gases; C = tank with top filling or discharge openings with 3 closures with only cleaning openings below the surface of the liquid; D = tank with top filling or discharge openings with 3 closures; or battery-vehicle or MEGC with no openings below the surface of the liquid.
4	Safety valves/devices	N = tank, battery-vehicle or MEGC with safety valve according to 6.8.3.2.9 or 6.8.3.2.10 which is not hermetically closed; H = hermetically closed tank, battery-vehicle or MEGC (see 1.2.1);

***NOTE 1**: The special provision TU17 indicated in Column (13) of Table A in Chapter 3.2 for certain gases means that the gas may only be carried in a battery-vehicle or MEGC the elements of which are composed of receptacles.*

***NOTE 2**: The pressures indicated on the tank itself or on the panel shall be not less than the value of "X" or the minimum calculation pressure.*

4.3.3.1.2 *Hierarchy of tanks*

Tank code	Other tank code(s) permitted for the substances under this code
C*BN	C#BN, C#CN, C#DN, C#BH, C#CH, C#DH
C*BH	C#BH, C#CH, C#DH
C*CN	C#CN, C#DN, C#CH, C#DH
C*CH	C#CH, C#DH
C*DN	C#DN, C#DH
C*DH	C#DH
P*BN	P#BN, P#CN, P#DN, P#BH, P#CH, P#DH
P*BH	P#BH, P#CH, P#DH
P*CN	P#CN, P#DN, P#CH, P#DH
P*CH	P#CH, P#DH
P*DN	P#DN, P#DH
P*DH	P#DH
R*BN	R#BN, R#CN, R#DN
R*CN	R#CN, R#DN
R*DN	R#DN

The figure represented by "#" shall be equal to or greater than the figure represented by "*".

NOTE: *This hierarchy does not take any special provisions into account (see 4.3.5 and 6.8.4) for each entry.*

4.3.3.2 ***Filling conditions and test pressures***

4.3.3.2.1 The test pressure for tanks intended for the carriage of compressed gases shall be at least 1.5 times the working pressure as defined in 1.2.1 for pressure receptacles.

4.3.3.2.2 The test pressure for tanks intended for the carriage of:

- high pressure liquefied gases; and
- dissolved gases

shall be such that, when the shell is filled to the maximum filling ratio, the pressure reached in the shell by the substance at 55 °C for tanks with thermal insulation or 65 °C for tanks without thermal insulation does not exceed the test pressure.

4.3.3.2.3 The test pressure for tanks intended for the carriage of low pressure liquefied gases will be:

(a) If the tank is equipped with thermal insulation, at least equal to the vapour pressure, reduced by 0.1 MPa (1 bar) of the liquid at 60 °C, but not less than 1 MPa (10 bar);

(b) If the tank is not equipped with thermal insulation, at least equal to the vapour pressure, reduced by 0.1 MPa (1 bar), of the liquid at 65 °C, but not less than 1 MPa (10 bar).

The maximum permissible mass of contents per litre of capacity is calculated as follows:

Maximum permissible mass of contents per litre of capacity = 0.95 × density of the liquid phase at 50 °C (in kg/l)

Moreover the vapour phase shall not disappear below 60 °C.

If the shells are not more than 1.5 m in diameter, the values of the test pressure and maximum filling ratio conforming to packing instruction P200 in 4.1.4.1 shall be applicable.

4.3.3.2.4 The test pressure for tanks intended for the carriage of refrigerated liquefied gases shall be not less than 1.3 times the maximum allowable working pressure and indicated on the tank but not less than 300 kPa (3 bar) (gauge pressure); for tanks with vacuum insulation the test pressure shall be not less than 1.3 times the maximum allowable working pressure increased by 100 kPa (1 bar).

4.3.3.2.5 *Table of gases and gas mixtures which may be carried in fixed tanks (tank-vehicles), battery-vehicles, demountable tanks, tank-containers or MEGCs indicating the minimum test pressure for tanks and as far as applicable the filling ratio*

In the case of gases and gas mixtures classified under n.o.s. entries, the values of the test pressure and the filling ratio shall be prescribed by the expert approved by the competent authority.

When tanks for compressed or high pressure liquefied gases have been subjected to a test pressure lower than shown in the table, and the tanks are fitted with thermal insulation, a lower maximum load may be prescribed by the expert approved by the competent authority, provided that the pressure reached in the tank by the substance at 55 °C does not exceed the test pressure stamped on the tank.

UN No.	**Name**	**Classification code**	**Minimum test pressure for tanks**				**Maximum permissible mass of contents per litre of capacity**
			With thermal insulation		**Without thermal insulation**		
			MPa	**bar**	**MPa**	**bar**	**kg**
1001	Acetylene, dissolved	4 F	only in battery-vehicles and MEGCs composed of receptacles				
1002	Air, compressed	1 A	see 4.3.3.2.1				
1003	Air, refrigerated liquid	3 O	see 4.3.3.2.4				
1005	Ammonia, anhydrous	2 TC	2.6	26	2.9	29	0.53
1006	Argon, compressed	1 A	see 4.3.3.2.1				
1008	Boron trifluoride	2 TC	22.5	225	22.5	225	0.715
			30	300	30	300	0.86
1009	Bromotrifluoromethane (Refrigerant gas R13B1)	2 A	12	120			1.50
					4.2	42	1.13
					12	120	1.44
					25	250	1.60
1010	BUTADIENES, STABILIZED (1,2-butadiene) or	2 F	1	10	1	10	0.59
1010	BUTADIENES, STABILIZED (1,3-butadiene) or	2 F	1	10	1	10	0.55
1010	BUTADIENES AND HYDROCARBON, MIXTURE, STABILIZED	2 F	1	10	1	10	0.50
1011	Butane	2 F	1	10	1	10	0.51
1012	1-butylene or	2 F	1	10	1	10	0.53
1012	trans-2-butylene or	2 F	1	10	1	10	0.54
1012	cis-2-butylene or	2 F	1	10	1	10	0.55
1012	butylenes mixture	2 F	1	10	1	10	0.50
1013	Carbon dioxide	2 A	19	190			0.73
			22.5	225			0.78
					19	190	0.66
					25	250	0.75

UN No.	Name	Classification code	Minimum test pressure for tanks				Maximum permissible mass of contents per litre of capacity
			With thermal insulation		Without thermal insulation		
			MPa	bar	MPa	bar	kg
1014	Carbon dioxide and oxygen mixtures compressed	1 O	see 4.3.3.2.1				
1015	Carbon dioxide and nitrous oxide mixture	2 A	see 4.3.3.2.2 or 4.3.3.2.3				
1016	Carbon monoxide, compressed	1 TF	see 4.3.3.2.1				
1017	Chlorine	2 TC	1.7	17	1.9	19	1.25
1018	Chlorodifluoromethane (Refrigerant gas R22)	2 A	2.4	24	2.6	26	1.03
1020	Chloropentafluoroethane (Refrigerant gas R115)	2 A	2	20	2.3	23	1.08
1021	1-chloro-1,2,2,2- tetrafluoroethane (Refrigerant gas R124)	2 A	1	10	1.1	11	1.2
1022	Chlorotrifluoromethane (Refrigerant gas R13)	2 A	12	120			0.96
			22.5	225			1.12
					10	100	0.83
					12	120	0.90
					19	190	1.04
					25	250	1.10
1023	Coal gas, compressed	TF	see 4.3.3.2.1				
1026	Cyanogen	2 TF	10	100	10	100	0.70
1027	Cyclopropane	2 F	1.6	16	1.8	18	0.53
1028	Dichlorodifluoromethane (Refrigerant gas R12)	2 A	1.5	15	1.6	16	1.15
1029	Dichlorofluoromethane (Refrigerant gas R21)	2 A	1	10	1	10	1.23
1030	1,1-difluoroethane (Refrigerant gas R152a)	2 F	1.4	14	1.6	16	0.79
1032	Dimethylamine, anhydrous	2 F	1	10	1	10	0.59
1033	Dimethyl ether	2 F	1.4	14	1.6	16	0.58
1035	Ethane	2 F	12	120			0.32
					9.5	95	0.25
					12	120	0.29
					30	300	0.39
1036	Ethylamine	2 F	1	10	1	10	0.61
1037	Ethyl chloride	2 F	1	10	1	10	0.8
1038	Ethylene, refrigerated liquid	3 F	see 4.3.3.2.4				
1039	Ethyl methyl ether	2 F	1	10	1	10	0.64
1040	Ethylene oxide with nitrogen up to a total pressure of 1MPa (10 bar) at 50 °C	2 TF	1.5	15	1.5	15	0.78
1041	Ethylene oxide and carbon dioxide mixture, with more than 9% but not more than 87% ethylene oxide	2 F	2.4	24	2.6	26	0.73
1046	Helium, compressed	1 A	see 4.3.3.2.1				
1048	Hydrogen bromide, anhydrous	2 TC	5	50	5.5	55	1.54
1049	Hydrogen, compressed	1 F	see 4.3.3.2.1				
1050	Hydrogen chloride, anhydrous	2 TC	12	120			0.69
					10	100	0.30
					12	120	0.56
					15	150	0.67
					20	200	0.74
1053	Hydrogen sulphide	2 TF	4.5	45	5	50	0.67
1055	Isobutylene	2 F	1	10	1	10	0.52
1056	Krypton, compressed	1 A	see 4.3.3.2.1				
1058	Liquefied gases, non flammable, charged with nitrogen, carbon dioxide or air	2 A	1.5 H filling pressure see 4.3.3.2.2 or 4.3.3.2.3				

UN No.	Name	Classification code	Minimum test pressure for tanks				Maximum permissible mass of contents per litre of capacity
			With thermal insulation		Without thermal insulation		
			MPa	bar	MPa	bar	kg
1060	Methylacetylene and propadiene mixture, stabilized:	2 F	see 4.3.3.2.2 or 4.3.3.2.3				
	mixture P1	2 F	2.5	25	2.8	28	0.49
	mixture P2	2 F	2.2	22	2.3	23	0.47
	propadiene with 1% to 4% methylacetylene	2 F	2.2	22	2.2	22	0.50
1061	Methylamine, anhydrous	2 F	1	10	1.1	11	0.58
1062	Methyl bromide with not more than 2% chloropicrin	2 T	1	10	1	10	1.51
1063	Methyl chloride (Refrigerant gas R40)	2 F	1.3	13	1.5	15	0.81
1064	Methyl mercaptan	2 TF	1	10	1	10	0.78
1065	Neon, compressed	1 A	see 4.3.3.2.1				
1066	Nitrogen, compressed	1 A	see 4.3.3.2.1				
1067	Dinitrogen tetroxide (nitrogen dioxide)	2 TOC	only in battery-vehicles and MEGCs composed of receptacles				
1070	Nitrous oxide	2 O	22.5	225			0.78
					18	180	0.68
					22.5	225	0.74
					25	250	0.75
1071	Oil gas, compressed	1 TF	see 4.3.3.2.1				
1072	Oxygen, compressed	1 O	see 4.3.3.2.1				
1073	Oxygen, refrigerated liquid	3 O	see 4.3.3.2.4				
1076	Phosgene	2 TC	only in battery-vehicles and MEGCs composed of receptacles				
1077	Propylene	2 F	2.5	25	2.7	27	0.43
1078	Refrigerant gases, n.o.s. such as:	2 A					
	mixture F1	2 A	1	10	1.1	11	1.23
	mixture F2	2 A	1.5	15	1.6	16	1.15
	mixture F3	2 A	2.4	24	2.7	27	1.03
	other mixtures	2 A	see 4.3.3.2.2 or 4.3.3.2.3				
1079	Sulphur dioxide	2 TC	1	10	1.2	12	1.23
1080	Sulphur hexafluoride	2 A	12	120			1.34
					7	70	1.04
					14	140	1.33
					16	160	1.37
1082	Trifluorochloroethylene, stabilized	2 TF	1.5	15	1.7	17	1.13
1083	Trimethylamine, anhydrous	2 F	1	10	1	10	0.56
1085	Vinyl bromide, stabilized	2 F	1	10	1	10	1.37
1086	Vinyl chloride, stabilized	2 F	1	10	1.1	11	0.81
1087	inyl methyl ether, stabilized	2 F	1	10	1	10	0.67
1581	Chloropicrin and methyl bromide mixture with more than 2% chloropicrin	2 T	1	10	1	10	1.51
1582	Chloropicrin and methyl chloride mixture	2 T	1.3	13	1.5	15	0.81
1612	Hexaethyl tetraphosphate and compressed gas mixture	1 T	see 4.3.3.2.1				
1749	Chlorine trifluoride	2 TOC	3	30	3	30	1.40
1858	Hexafluoropropylene (Refrigerant gas R 1216)	2A	1.7	17	1.9	19	1.11
1859	Silicon tetrafluoride	2 TC	20	200	20	200	0.74
			30	300	30	300	1.10
1860	Vinyl fluoride, stabilized	2 F	12	120			0.58
			22.5	225			0.65
					25	250	0.64

UN No.	Name	Classification code	Minimum test pressure for tanks				Maximum permissible mass of contents per litre of capacity
			With thermal insulation		Without thermal insulation		
			MPa	bar	MPa	bar	kg
1912	Methyl chloride and methylene chloride mixture	2 F	1.3	13	1.5	15	0.81
1913	Neon, refrigerated liquid	3 A	see 4.3.3.2.4				
1951	Argon, refrigerated liquid	3 A	see 4.3.3.2.4				
1952	Ethylene oxide and carbon dioxide mixture, with not more than 9% ethylene oxide	2 A	19	190	19	190	0.66
			25	250	25	250	0.75
1953	Compressed gas, toxic, flammable, n.o.s.[a]	1 TF	see 4.3.3.2.1 or 4.3.3.2.2				
1954	Compressed gas, flammable n.o.s.	1 F	see 4.3.3.2.1 or 4.3.3.2.2				
1955	Compressed gas, toxic, n.o.s.[a]	1 T	see 4.3.3.2.1 or 4.3.3.2.2				
1956	Compressed gas, n.o.s.	1 A	see 4.3.3.2.1 or 4.3.3.2.2				
1957	Deuterium, compressed	1 F	see 4.3.3.2.1				
1958	1,2-dichloro-1,1,2,2-tetrafluoroethane (Refrigerant gas R114)	2 A	1	10	1	10	1.3
1959	1,1-difluoroethylene (Refrigerant gas R1132a)	2 F	12	120			0.66
			22.5	225			0.78
					25	250	0.77
1961	Ethane, refrigerated liquid	3 F	see 4.3.3.2.4				
1962	Ethylene	2 F	12	120			0.25
			22.5	225			0.36
					22.5	225	0.34
					30	300	0.37
1963	Helium, refrigerated liquid	3 A	see 4.3.3.2.4				
1964	Hydrocarbon gas mixture, compressed, n.o.s.	1 F	see 4.3.3.2.1 or 4.3.3.2.2				
1965	Hydrocarbon gas mixture, liquefied, n.o.s.:	2 F					
	Mixture A	2 F	1	10	1	10	0.50
	Mixture A01	2 F	1.2	12	1.4	14	0.49
	Mixture A02	2 F	1.2	12	1.4	14	0.48
	Mixture A0	2 F	1.2	12	1.4	14	0.47
	Mixture A1	2 F	1.6	16	1.8	18	0.46
	Mixture B1	2 F	2	20	2.3	23	0.45
	Mixture B2	2 F	2	20	2.3	23	0.44
	Mixture B	2 F	2	20	2.3	23	0.43
	Mixture C	2 F	2.5	25	2.7	27	0.42
	Other mixtures	2 F	see 4.3.3.2.2 or 4.3.3.2.3				
1966	Hydrogen, refrigerated liquid	3 F	see 4.3.3.2.4				
1967	Insecticide gas, toxic, n.o.s.[a]	2 T	see 4.3.3.2.2 or 4.3.3.2.3				
1968	Insecticide gas, n.o.s.	2 A	see 4.3.3.2.2 or 4.3.3.2.3				
1969	Isobutane	2 F	1	10	1	10	0.49
1970	Krypton, refrigerated liquid	3 A	see 4.3.3.2.4				
1971	Methane, compressed or natural gas, compressed with high methane content	1 F	see 4.3.3.2.1				
1972	Methane, refrigerated liquid or natural gas, refrigerated liquid with high methane content	3 F	see 4.3.3.2.4				
1973	Chlorodifluoromethane and chloropentafluoroethane mixture with fixed boiling point, with approximately 49% chlorodifluoromethane (Refrigerant gas R502)	2 A	2.5	25	2.8	28	1.05

[a] *Allowed if LC_{50} equal to or greater than 200 ppm.*

UN No.	Name	Classification code	Minimum test pressure for tanks				Maximum permissible mass of contents per litre of capacity
			With thermal insulation		Without thermal insulation		
			MPa	bar	MPa	bar	kg
1974	Chlorodifluorobromomethane (Refrigerant gas R12B1)	2 A	1	10	1	10	1.61
1976	Octafluorocyclobutane (Refrigerant gas RC318)	2 A	1	10	1	10	1.34
1977	Nitrogen, refrigerated liquid	3 A	see 4.3.3.2.4				
1978	Propane	2 F	2.1	21	2.3	23	0.42
1979	Rare gases mixture, compressed	1 A	see 4.3.3.2.1				
1980	Rare gases and oxygen mixture, compressed	1 A	see 4.3.3.2.1				
1981	Rare gases and nitrogen mixture, compressed	1 A	see 4.3.3.2.1				
1982	Tetrafluoromethane (Refrigerant gas R14)	2 A	20	200	20	200	0.62
			30	300	30	300	0.94
1983	1-chloro-2,2,2-trifluoroethane (Refrigerant gas R133a)	2 A	1	10	1	10	1.18
1984	Trifluoromethane (Refrigerant gas R23)	2 A	19	190			0.92
			25	250			0.99
					19	190	0.87
					25	250	0.95
2034	Hydrogen and methane mixture, compressed	1 F	see 4.3.3.2.1				
2035	1,1,1-trifluoroethane (Refrigerant gas R143a)	2 F	2.8	28	3.2	32	0.79
2036	Xenon	2 A	12	120			1.30
					13	130	1.24
2044	2,2-dimethylpropane	2 F	1	10	1	10	0.53
2073	Ammonia solutions, relative density less than 0.880 at 15 °C in water:	4 A					
	with more than 35% and not more than 40% ammonia	4 A	1	10	1	10	0.80
	with more than 40% and not more than 50% ammonia	4 A	1.2	12	1.2	12	0.77
2187	Carbon dioxide, refrigerated liquid	3 A	see 4.3.3.2.4				
2189	Dichlorosilane	2 TFC	1	10	1	10	0.90
2191	Sulfuryl fluoride	2 T	5	50	5	50	1.1
2193	Hexafluoroethane (Refrigerant gas R116)	2 A	16	160			1.28
			20	200			1.34
					20	200	1.10
2197	Hydrogen iodide, anhydrous	2 TC	1.9	19	2.1	21	2.25
2200	Propadiene, stabilized	2 F	1.8	18	2.0	20	0.50
2201	Nitrous oxide, refrigerated liquid	3 O	see 4.3.3.2.4				
2203	Silane [b]	2 F	22.5	225	22.5	225	0.32
			25	250	25	250	0.36
2204	Carbonyl sulphide	2 TF	2.7	27	3.0	30	0.84
2417	Carbonyl fluoride	2 TC	20	200	20	200	0.47
			30	300	30	300	0.70
2419	Bromotrifluoroethylene	2 F	1	10	1	10	1.19
2420	Hexafluoroacetone	2 TC	1.6	16	1.8	18	1.08
2422	Octafluorobut-2-ene (Refrigerant gas R1318)	2 A	1	10	1	10	1.34
2424	Octafluoropropane (Refrigerant gas R218)	2 A	2.1	21	2.3	23	1.07

[b] *Considered as pyrophoric.*

UN No.	Name	Classification code	Minimum test pressure for tanks				Maximum permissible mass of contents per litre of capacity
			With thermal insulation		Without thermal insulation		
			MPa	bar	MPa	bar	kg
2451	Nitrogen trifluoride	2 O	20	200	20	200	0.50
			30	300	30	300	0.75
2452	Ethylacetylene, stabilized	2 F	1	10	1	10	0.57
2453	Ethyl fluoride (Refrigerant gas R161)	2 F	2.1	21	2.5	25	0.57
2454	Methyl fluoride (Refrigerant gas R41)	2 F	30	300	30	300	0.36
2517	1-chloro-1,1-difluoroethane (Refrigerant gas R142b)	2 F	1	10	1	10	0.99
2591	Xenon, refrigerated liquid	3 A	see 4.3.3.2.4				
2599	Chlorotrifluoromethane and trifluoromethane, azeotropic mixture with approximately 60% chlorotrifluoromethane (Refrigerant gas R503)	2 A	3.1	31	3.1	31	0.11
			4.2	42			0.21
			10	100			0.76
					4.2	42	0.20
					10	100	0.66
2600	Carbon monoxide and hydrogen mixture, compressed	1 TF	see 4.3.3.2.1				
2601	Cyclobutane	2 F	1	10	1	10	0.63
2602	Dichlorodifluoromethane and difluoro-1,1 ethane, azeotropic mixture with approximately 74% dichlorodifluoromethane (Refrigerant gas R500)	2 A	1.8	18	2	20	1.01
2901	Bromine chloride	2 TOC	1	10	1	10	1.50
3057	Trifluoroacetyl chloride	2 TC	1.3	13	1.5	15	1.17
3070	Ethylene oxide and dichlorodifluoromethane mixture with not more than 12.5% ethylene oxide	2 A	1.5	15	1.6	16	1.09
3083	Perchloryl fluoride	2 TO	2.7	27	3.0	30	1.21
3136	Trifluoromethane, refigerated liquid	3 A	See 4.3.3.2.4				
3138	Ethylene, acetylene propylene in mixture, refrigerated liquid, containing at least 71.5% ethylene with not more than 22.5% acetylene and not more than 6% propylene	3 F	see 4.3.3.2.4				
3153	Perfluoro(methyl vinyl ether)	2 F	1.4	14	1.5	15	1.14
3154	Perfluoro(ethyl vinyl ether)	2 F	1	10	1	10	0.98
3156	Compressed gas, oxidizing, n.o.s.	1 O	see 4.3.3.2.1 or 4.3.3.2.2				
3157	Liquefied gas, oxidizing, n.o.s.	2 O	see 4.3.3.2.2 or 4.3.3.2.3				
3158	Gas, refrigerated liquid, n.o.s.	3 A	see 4.3.3.2.4				
3159	1,1,1,2-tetrafluoroethane (Refrigerant gas R134a)	2 A	1.6	16	1.8	18	1.04
3160	Liquefied gas, toxic, flammable, n.o.s. [a]	2 TF	see 4.3.3.2.2 or 4.3.3.2.3				
3161	Liquefied gas, flammable, n.o.s.	2 F	see 4.3.3.2.2 or 4.3.3.2.3				
3162	Liquefied gas, toxic, n.o.s. [a]	2 T	see 4.3.3.2.2 or 4.3.3.2.3				
3163	Liquefied gas, n.o.s.	2 A	see 4.3.3.2.2 or 4.3.3.2.3				
3220	Pentafluoroethane (Refrigerant gas R125)	2 A	4.1	41	4.9	49	0.95
3252	Difluoromethane (Refrigerant gas R32)	2 F	3.9	39	4.3	43	0.78
3296	Heptafluoropropane (Refrigerant gas R227)	2 A	1.4	14	1.6	16	1.20

[a] *Allowed if LC_{50} equal to or greater than 200 ppm.*

UN No.	Name	Classification code	Minimum test pressure for tanks				Maximum permissible mass of contents per litre of capacity
			With thermal insulation		Without thermal insulation		
			MPa	bar	MPa	bar	kg
3297	Ethylene oxide and chlorotetrafluoroethane mixture, with not more than 8.8% ethylene oxide	2 A	1	10	1	10	1.16
3298	Ethylene oxide and pentafluoroethane mixture, with not more than 7.9% ethylene oxide	2 A	2.4	24	2.6	26	1.02
3299	Ethylene oxide and tetrafluoroethane mixture, with not more than 5.6% ethylene oxide	2 A	1.5	15	1.7	17	1.03
3300	Ethylene oxide and carbon dioxide mixture, with more than 87% ethylene oxide	2 TF	2.8	28	2.8	28	0.73
3303	Compressed gas, toxic, oxidizing, n.o.s.[a]	1 TO	see 4.3.3.2.1 or 4.3.3.2.2				
3304	Compressed gas, toxic, corrosive, n.o.s.[a]	1 TC	see 4.3.3.2.1 or 4.3.3.2.2				
3305	Compressed gas, toxic, flammable, corrosive, n.o.s. [a]	1 TFC	see 4.3.3.2.1 or 4.3.3.2.2				
3306	Compressed gas, toxic, oxidizing, corrosive, n.o.s. [a]	1 TOC	see 4.3.3.2.1 or 4.3.3.2.2				
3307	Liquefied gas, toxic, oxidizing, n.o.s. [a]	2 TO	see 4.3.3.2.2 or 4.3.3.2.3				
3308	Liquefied gas, toxic, corrosive, n.o.s. [a]	2 TC	see 4.3.3.2.2 or 4.3.3.2.3				
3309	Liquefied gas, toxic, flammable, corrosive, n.o.s. [a]	2 TFC	see 4.3.3.2.2 or 4.3.3.2.3				
3310	Liquefied gas, toxic, oxidizing, corrosive, n.o.s. [a]	2 TOC	see 4.3.3.2.2 or 4.3.3.2.3				
3311	Gas, refrigerated liquid, oxidizing, n.o.s.	3 O	see 4.3.3.2.4				
3312	Gas, refrigerated liquid, flammable, n.o.s.	3 F	see 4.3.3.2.4				
3318	Ammonia solutions, relative density less than 0.880 at 15 °C in water, with more than 50% ammonia	4 TC	see 4.3.3.2.2				
3337	Refrigerant gas R404A	2 A	2.9	29	3.2	32	0.84
3338	Refrigerant gas R407A	2 A	2.8	28	3.2	32	0.95
3339	Refrigerant gas R407B	2 A	3.0	30	3.3	33	0.95
3340	Refrigerant gas R407C	2 A	2.7	27	3.0	30	0.95
3354	Insecticide gas, flammable, n.o.s.	2 F	see 4.3.3.2.2 or 4.3.3.2.3				
3355	Insecticide gas, toxic, flammable, n.o.s.[a]	2 TF	see 4.3.3.2.2 or 4.3.3.2.3				

4.3.3.3 ***Operation***

4.3.3.3.1 When tanks, battery-vehicles or MEGCs are approved for different gases, the change of use shall include emptying, purging and evacuation operations to the extent necessary for safe operation.

4.3.3.3.2 When tanks, battery-vehicles or MEGCs are handed over for carriage, only the particulars specified in 6.8.3.5.6 applicable to the gas loaded or just discharged shall be visible; all particulars concerning other gases shall be covered up.

4.3.3.3.3 All the elements of a battery-vehicle or MEGC shall contain only one and the same gas.

4.3.3.4 (*Reserved)*

[a] *Allowed if LC_{50} equal to or greater than 200 ppm.*

4.3.4 Special provisions applicable to Classes 3 to 9

4.3.4.1 *Coding, rationalized approach and hierarchy of tanks*

4.3.4.1.1 *Coding of tanks*

The four parts of the codes (tank codes) given in Column (12) of Table A in Chapter 3.2 have the following meanings:

Part	Description	Tank code
1	Types of tank	L = tank for substances in the liquid state (liquids or solids handed over for carriage in the molten state); S = tank for substances in the solid state (powdery or granular).
2	Calculation pressure	G = minimum calculation pressure according to the general requirements of 6.8.2.1.14; or 1.5; 2.65; 4; 10; 15 or 21= minimum calculation pressure in bar (see 6.8.2.1.14).
3	Openings (see 6.8.2.2.2)	A = tank with bottom-filling and discharge openings with 2 closures; B = tank with bottom-filling and discharge openings with 3 closures; C = tank with top-filling and discharge openings with only cleaning openings below the surface of the liquid; D = tank with top-filling and discharge openings with no openings below the surface of the liquid.
4	Safety valves/devices	V = tank with a venting system, according to 6.8.2.2.6, but no flame trap; or non-explosion-pressure proof tank; F = tank with a venting system, according to 6.8.2.2.6, fitted with a flame trap; or explosion-pressure proof tank; N = tank without a venting system according to 6.8.2.2.6 and not hermetically closed; H = hermetically closed tank (see 1.2.1).

4.3.4.1.2 *Rationalized approach for assignment of ADR tank codes to groups of substances and hierarchy of tanks*

NOTE: *Certain substances and groups of substances are not included in the rationalized approach, see 4.3.4.1.3*

Rationalized approach			
Tank code	**Group of permitted substances**		
	Class	**Classification code**	**Packing group**
LIQUIDS LGAV	3	F2	III
	9	M9	III
LGBV	4.1	F2	II, III
	5.1	O1	III
	9	M6	III
		M11	III
	and groups of permitted substances for tank code LGAV		
LGBF	3	F1	II vapour pressure at 50 °C ≤ 1.1 bar
		F1	III
		D	II vapour pressure at 50 °C ≤ 1.1 bar
		D	III
	and groups of permitted substances for tank codes LGAV and LGBV		
L1.5BN	3	F1	I, II 1.1 bar < vapour pressure at 50 °C ≤ 1.75 bar
		F1	III flashpoint <23°C, viscous, 1.1bar < vapour pressure at 50°C ≤ 1.75bar
		D	I, II 1.1bar < vapour pressure at 50°C ≤ 1.75bar
	and groups of permitted substances for tank codes LGAV, LGBV and LGBF		
L4BV	5.1	O1	-
L4BN	3	F1	I, III vapour pressure at 50 °C>1.75 bar
		FC	III
		D	I vapour pressure at 50°C>1.75 bar
	5.1	O1	I, II
		OT1	I
	8	C1	II, III
		C3	II, III
		C4	II, III
		C5	II, III
		C7	II, III
		C8	II, III
		C9	II, III
		C10	II, III
		CF1	II
		CF2	II
		CS1	II
		CW1	II
		CW2	II
		CO1	II
		CO2	II
		CT1	II, III
		CT2	II, III
		CFT	II
		M11	III
	and groups of permitted substances for tank codes LGAV, LGBV, LGBF and L1.5BN		

Rationalized approach			
Tank code	**Group of permitted substances**		
	Class	**Classification code**	**Packing group**
L4BH	3	FT1	II, III
		FT2	II
		FC	II
		FTC	II
	6.1	T1	II, III
		T2	II, III
		T3	II, III
		T4	II, III
		T6	II, III
		T7	II, III
		TF1	II
		TF2	II, III
		TF3	II
		TS	II
		TW1	II
		TW2	II
		TO1	II
		TO2	II
		TC1	II
		TC2	II
		TC3	II
		TC4	II
		TFC	II
	6.2	I3	II
	9	M2	II
	and groups of permitted substances for tank codes LGAV, LGBV, LGBF, L1.5BN and L4BN		
L4DH	4.2	S1	II, III
		S3	II, III
		ST1	II, III
		ST3	II, III
		SC1	II, III
		SC3	II, III
	4.3	W1	II, III
		WF1	II, III
		WT1	II, III
		WC1	II, III
	8	CT1	II, III
	and groups of permitted substances for tank codes LGAV, LGBV, LGBF, L1.5BN, L4BN and L4BH		
L10BH	8	C1	I
		C3	I
		C4	I
		C5	I
		C7	I
		C8	I
		C9	I
		C10	I
		CF1	I
		CF2	I
		CS1	I
		CW1	I
		CW2	I
		CO1	I
		CO2	I
		CT1	I
		CT2	I
		COT	I
	and groups of permitted substances for tank codes LGAV, LGBV, LGBF, L1.5BN, L4BN, and L4BH		

Rationalized approach			
Tank code	**Group of permitted substances**		
	Class	**Classification code**	**Packing group**
L10CH	3	FT1	I
		FT2	I
		FC	I
		FTC	I
	6.1	T1	I
		T2	I
		T3	I
		T4	I
		T6	I
		T7	I
		TF1	I
		TF2	I
		TF3	I
		TS	I
		TW1	I
		TO1	I
		TC1	I
		TC2	I
		TC3	I
		TC4	I
		TFC	I
	and groups of permitted substances for tank codes LGAV, LGBV, LGBF, L1.5BN, L4BN, L4BH, and L10BH		
L10DH	4.3	W1	I
		WF1	I
		WT1	I
		WC1	I
		WFC	I
	5.1	OTC	I
	8	CT1	I
	and groups of permitted substances for tank codes LGAV, LGBV, LGBF, L1.5BN, L4BN, L4BH, L4DH, L10BH and L10CH		
L15CH	3	FT1	I
	6.1	TF1	I
	and groups of permitted substances for tank codes LGAV, LGBV, LGBF, L1.5BN, L4BN, L4BH, L10BH and L10CH		
L21DH	4.2	S1	I
		S3	I
		SW	I
		ST3	I
	and groups of permitted substances for tank codes LGAV, LGBV, LGBF, L1.5BN, L4BN, L4BH, L4DH, L10BH, L10CH, L10DH and L15CH		
SOLIDS SGAV	4.1	F1	III
		F3	III
	4.2	S2	II, III
		S4	III
	5.1	O2	II, III
	8	C2	II, III
		C4	III
		C6	III
		C8	III
		C10	II, III
		CT2	III
	9	M7	III
		M11	II, III

Rationalized approach			
Tank code	**Group of permitted substances**		
	Class	**Classification code**	**Packing group**
SGAN	4.1	F1	II
		F3	II
		FT1	II, III
		FT2	II, III
		FC1	II, III
		FC2	II, III
	4.2	S2	II
		S4	II, III
		ST2	II, III
		ST4	II, III
		SC2	II, III
		SC4	II, III
	4.3	W2	II, III
		WF2	II
		WS	II, III
		WT2	II, III
		WC2	II, III
	5.1	O2	II, III
		OT2	II, III
		OC2	II, III
	8	C2	II
		C4	II
		C6	II
		C8	II
		C10	II
		CF2	II
		CS2	II
		CW2	II
		CO2	II
		CT2	II
	9	M3	III
	and groups of permitted substances for tank codes SGAV		
SGAH	6.1	T2	II, III
		T3	II, III
		T5	II, III
		T7	II, III
		T9	II
		TF3	II
		TS	II
		TW2	II
		TO2	II
		TC2	II
		TC4	II
	9	M1	II, III
	and groups of permitted substances for tanks codes SGAV and SGAN		
S4AH	6.2	I3	II
	9	M2	II
	and groups of permitted substances for tanks codes SGAV, SGAN and SGAH		
S10AN	8	C2	I
		C4	I
		C6	I
		C8	I
		C10	I
		CF2	I
		CS2	I
		CW2	I
		CO2	I
		CT2	I
	and groups of permitted substances for tank codes SGAV and SGAN		

Rationalized approach			
Tank code	**Group of permitted substances**		
	Class	**Classification code**	**Packing group**
S10AH	6.1	T2	I
		T3	I
		T5	I
		T7	I
		TS	I
		TW2	I
		TO2	I
		TC2	I
		TC4	I
	and groups of permitted substances for tank codes SGAV, SGAN, SGAH and S10AN		

Hierarchy of tanks

Tanks with tank codes different from those indicated in this table or in Table A of Chapter 3.2 may also be used provided that the first part of the code (L or S) remains unchanged and that any other element (number or letter) of parts 2 to 4 of these tank codes correspond to a level of safety at least equivalent to the corresponding element of the tank code indicated in Table A of Chapter 3.2, according to the following increasing order:

Part 2: Calculation pressure
G → 1.5 → 2.65 → 4 → 10 → 15 → 21 bar
Part 3: Openings
A → B → C → D
Part 4: Safety valves/devices
V → F → N → H

For example, a tank with the tank code L10CN is authorized for the carriage of a substance to which the tank code L4BN has been assigned.

NOTE: *The hierarchy does not take account of any special provisions for each entry (see 4.3.5 and 6.8.4)*

4.3.4.1.3 The following substances and groups of substances in respect of which a "(+)" is given after the tank code in Column (12) of Table A in Chapter 3.2 are subject to special provisions. In that case the alternate use of the tanks for other substances and groups of substances is permitted only where this is specified in the certificate of type approval. Higher value tanks according to the provisions at the end of the table in 4.3.4.1.2 may be used with due regard to the special provisions indicated in Column (13) of Table A in Chapter 3.2.

(a) Class 4.1:

UN No. 2448 sulphur, molten: code LGBV;

(b) Class 4.2:

UN No. 1381 phosphorus, white or yellow, dry, or under water or in solution and UN No. 2447 phosphorus, white or yellow molten: code L10DH;

(c) Class 4.3:

UN No. 1389 alkali metal amalgam, liquid, UN No. 1391 alkali metal dispersion or alkaline earth metal dispersion, UN No. 1392 alkaline earth metal amalgam, liquid, UN No. 1415 lithium, UN No. 1420 potassium metal alloys, liquid, UN No. 1421 alkali metal alloy, liquid, n.o.s, UN No. 1422 potassium sodium alloys, liquid, UN No. 1428 sodium and UN No. 2257 potassium: code L10BN;

UN No. 1407 caesium and UN No. 1423 rubidium: code L10CH;

UN No. 3401 alkali metal amalgam, solid, UN No. 3402 alkaline earth metal amalgam, solid, 3403 potassium metal alloys, solid and UN No. 3404 potassium sodium alloys, solid: code L10BN;

(d) Class 5.1:

UN No. 1873 perchloric acid 50-72%: code L4DN;

UN No. 2015 hydrogen peroxide, aqueous solution, stabilized with more than 70% hydrogen peroxide: code L4DV;

UN No. 2015 hydrogen peroxide, aqueous solution, stabilized with 60-70% hydrogen peroxide: code L4BV;

UN No. 2014 hydrogen peroxide, aqueous solution with 20-60% hydrogen peroxide, and UN No. 3149 hydrogen peroxide and peroxyacetic acid mixture, stabilized: code L4BV;

UN No. 2426 ammonium nitrate, liquid, hot concentrated solution with more than 80% but not more than 93%: code L4BV;

UN No. 3375 ammonium nitrate emulsion, suspension or gel, liquid: code LGAV;

UN No. 3375 ammonium nitrate emulsion, suspension or gel, solid: code SGAV;

(e) Class 5.2:

UN No. 3109 organic peroxide type F, liquid and UN No. 3119 organic peroxide, type F, liquid temperature controlled: code L4BN;

UN No. 3110 organic peroxide, type F, solid and UN No. 3120 organic peroxide, type F, solid, temperature controlled: code S4AN;

(f) Class 6.1:

UN No. 1613 hydrogen cyanide, aqueous solution and UN No. 3294 hydrogen cyanide solution in alcohol: code L15DH;

(g) Class 7:

All substances: special tanks;

Minimum requirements for liquids: code L2,65CN; for solids: code S2,65AN

Notwithstanding the general requirements of this paragraph, tanks used for radioactive material may also be used for the carriage of other goods provided the requirements of 5.1.3.2 are complied with.

(h) Class 8:

UN No. 1052 hydrogen fluoride, anhydrous and UN No. 1790 hydrofluoric acid, solution, with more than 85% hydrofluoric acid: code L21DH;

UN No. 1744 bromine or bromine solution: code L21DH;

UN No. 1791 hypochlorite solution and UN No. 1908 chlorite solution: code L4BV.

4.3.4.1.4 Tanks intended for the carriage of liquid wastes complying with the requirements of Chapter 6.10 and equipped with two closures in accordance with 6.10.3.2, shall be assigned to tank code L4AH. If the tanks concerned are equipped for the alternate carriage of liquid and solid substances, they shall be assigned to the combined codes L4AH+S4AH.

4.3.4.2 ***General provisions***

4.3.4.2.1 Where hot substances are loaded, the temperature of the outer surface of the tank or of the thermal insulation shall not exceed 70 °C during carriage.

4.3.4.2.2 The connecting pipes between independent but interconnected tanks of a transport unit shall be empty during carriage. Flexible filling and discharge pipes which are not permanently connected to the shells shall be empty during carriage.

4.3.4.2.3 *(Reserved)*

4.3.5 Special provisions

When they are shown under an entry in Column (13) of Table of A in Chapter 3.2, the following special provisions apply:

TU1 The tanks shall not be handed over for carriage until the substance has solidified completely and been covered by an inert gas. Uncleaned empty tanks which have contained these substances shall be filled with an inert gas.

TU2 The substance shall be covered by an inert gas. Uncleaned empty tanks which have contained these substances shall be filled with an inert gas.

TU3 The inside of the shell and all parts liable to come into contact with the substance shall be kept clean. No lubricant capable of combining dangerously with the substance shall be used for pumps, valves or other devices.

TU4 During carriage, these substances shall be under a layer of inert gas, the gauge pressure of which shall not be less than 50 kPa (0.5 bar).

Uncleaned empty tanks which have contained these substances shall when handed over for carriage be filled with an inert gas at a gauge pressure of at least 50 kPa (0.5 bar).

TU5 *(Reserved)*

TU6 Not authorized for carriage in tanks, battery-vehicles and MEGCs when having a LC_{50} lower than 200 ppm.

TU7 The materials used to ensure leakproofness of the joints or for the maintenance of the closures shall be compatible with the contents.

TU8 An aluminium-alloy tank shall not be used for carriage unless the tank is reserved solely for such carriage and the acetaldehyde is free from acid.

TU9 UN No.1203 petrol (gasoline) with a vapour pressure at 50 °C of more than 110 kPa (1.1 bar) but not above 150 kPa (1.5 bar) may also be carried in tanks designed according to 6.8.2.1.14 (a) and having equipment conforming to 6.8.2.2.6.

TU10 *(Reserved)*

TU11 During filling, the temperature of this substance shall not exceed 60 °C. A maximum filling temperature of 80 °C is allowed provided that smoulder spots are prevented and that the following conditions are met. After filling, the tanks shall be pressurized (e.g. with compressed air) to check tightness. It shall be ensured that no depressurization takes place during carriage. Before discharge, it shall be checked if pressure in the tanks is still above atmospheric. If this is not the case, an inert gas shall be introduced into the tanks prior to discharge.

TU12 In the event of a change of use, shells and equipment shall be thoroughly cleansed of all residues before and after the carriage of this substance.

TU13 Tanks shall be free from impurities at the time of filling. Service equipment such as valves and external piping shall be emptied after filling or discharging.

TU14 The protective caps of closures shall be locked during carriage.

TU15 Tanks shall not be used for the carriage of foodstuffs, articles of consumption or animal feeds.

TU16 Uncleaned empty tanks, shall, when handed over for carriage, either:

- be filled with nitrogen; or
- be filled with water to not less than 96% and not more than 98% of their capacity; between 1 October and 31 March, this water shall contain sufficient anti-freeze agent to make it impossible for the water to freeze during carriage; the anti-freeze agent shall be free from corrosive action and not liable to react with phosphorus.

TU17 Only to be carried in battery-vehicles or MEGCs the elements of which are composed of receptacles.

TU18 The degree of filling shall remain below the level at which, if the contents were raised to a temperature at which the vapour pressure equalled the opening pressure of the safety valve, the volume of the liquid would reach 95% of the tank's capacity at that temperature. The provision in 4.3.2.3.4 shall not apply.

TU19 Tanks may be filled to 98% at the filling temperature and pressure. The provision in 4.3.2.3.4 shall not apply.

TU20 *(Reserved)*

TU21 The substance shall, if water is used as a protective agent, be covered with a depth of not less than 12 cm of water at the time of filling; the degree of filling at a temperature of 60 °C shall not exceed 98%. If nitrogen is used as a protective agent, the degree of filling at a temperature of 60 °C shall not exceed 96%. The remaining space shall be filled with nitrogen in such a way that, even after cooling, the pressure at no time falls below atmospheric pressure. The tank shall be closed in such a way that no leakage of gas occurs.

TU22 Tanks shall be filled to not more than 90% of their capacity; a space of 5% shall remain empty when the liquid is at an average temperature of 50 °C.

TU23 The degree of filling shall not exceed 0.93 kg per litre of capacity, if filling is by mass. If filling is by volume, the degree of filling shall not exceed 85%.

TU24 The degree of filling shall not exceed 0.95 kg per litre of capacity, if filling is by mass. If filling is by volume, the degree of filling shall not exceed 85%.

TU25 The degree of filling shall not exceed 1.14 kg per litre of capacity, if filling is by mass. If filling is by volume, the degree of filling shall not exceed 85%.

TU26 The degree of filling shall not exceed 85%.

TU27 Tanks shall not be filled to more than 98% of their capacity.

TU28 Tanks shall be filled to not more than 95% of their capacity at a reference temperature of 15 °C.

TU29 Tanks shall be filled to not more than 97% of their capacity and the maximum temperature after filling shall not exceed 140 °C.

TU30 Tanks shall be filled as set out in the test report for the type approval of the tank but shall be filled to not more than 90% of their capacity.

TU31 Tanks shall not be filled to more than 1 kg per litre of capacity.

TU32 Tanks shall not be filled to more than 88% of their capacity.

TU33 Tanks shall be filled to not less than 88% and not more than 92% of their capacity or to 2.86 kg per litre of capacity.

TU34 Tanks shall not be filled to more than 0.84 kg per litre of capacity.

TU35 Empty fixed tanks (tank-vehicles), empty demountable tanks and empty tank-containers, uncleaned, which have contained these substances are not subject to the requirements of ADR if adequate measures have been taken to nullify any hazard.

TU36 The degree of filling according to 4.3.2.2, at the reference temperature of 15 °C, shall not exceed 93% of the capacity.

TU37 Carriage in tanks is limited to substances containing pathogens which are unlikely to be a serious hazard, and for which, while capable of causing serious infection on exposure, effective treatment and preventive measures are available and the risk of spread of infection is limited (i.e. moderate individual risk and low community risk).

TU38 *(Reserved)*

TU39 The suitability of the substance for carriage in tanks shall be demonstrated. The method to evaluate this suitability shall be approved by the competent authority. One method is test 8(d) in Test Series 8 (see Manual of Tests and Criteria, Part 1, sub-section 18.7).

Substances shall not be allowed to remain in the tank for any period that could result in caking. Appropriate measures shall be taken to avoid accumulation and packing of substances in the tank (e.g. cleaning etc.).

CHAPTER 4.4

USE OF FIBRE-REINFORCED PLASTICS (FRP) TANKS, FIXED TANKS (TANK-VEHICLES), DEMOUNTABLE TANKS, TANK-CONTAINERS AND TANK SWAP BODIES

NOTE: *For portable tanks and UN multiple-element gas containers (MEGCs), see Chapter 4.2; for fixed tanks (tank-vehicles), demountable tanks, tank-containers and tank swap bodies, with shells made of metallic materials, and battery-vehicles and multiple elements gas containers (MEGCs) other than UN MEGCs, see Chapter 4.3; for vacuum operated waste containers, see Chapter 4.5.*

4.4.1 General

The carriage of dangerous substances in fibre-reinforced plastics (FRP) tanks is permitted only when the following conditions are met:

(a) The substance is classified in Class 3, 5.1, 6.1, 6.2, 8 or 9;

(b) The maximum vapour pressure (absolute pressure) at 50 °C of the substance does not exceed 110 kPa (1.1 bar);

(c) The carriage of the substance in metallic tanks is authorized according to 4.3.2.1.1;

(d) The calculation pressure specified for that substance in part 2 of the tank code given in Column (12) of Table A in Chapter 3.2 does not exceed 4 bar (see also 4.3.4.1.1); and

(e) The tank complies with the provisions of Chapter 6.9 applicable for the carriage of the substance.

4.4.2 Operation

4.4.2.1 The provisions of 4.3.2.1.5 to 4.3.2.2.4, 4.3.2.3.3 to 4.3.2.3.6, 4.3.2.4.1, 4.3.2.4.2, 4.3.4.1 and 4.3.4.2 shall apply.

4.4.2.2 The temperature of the substance carried shall not exceed, at the time of filling, the maximum service temperature indicated on the tank plate referred to in 6.9.6.

4.4.2.3 When applicable to carriage in metallic tanks, the special provisions (TU) of 4.3.5 shall also apply, as indicated in Column (13) of Table A in Chapter 3.2.

CHAPTER 4.5

USE OF VACUUM OPERATED WASTE TANKS

NOTE: *For portable tanks and UN multiple-element gas containers (MEGCs), see Chapter 4.2; for fixed tanks (tank-vehicles), demountable tanks, tank-containers and tank swap bodies, with shells made of metallic materials, and battery-vehicles and multiple elements gas containers (MEGCs) other than UN MEGCs, see Chapter 4.3; for fibre reinforced plastics tanks, see Chapter 4.4.*

4.5.1 Use

4.5.1.1 Wastes consisting of substances in Classes 3, 4.1, 5.1, 6.1, 6.2, 8 and 9 may be carried in vacuum-operated waste tanks conforming to Chapter 6.10 if their carriage in fixed tanks, demountable tanks, tank-containers or tank swap bodies is permitted according to Chapter 4.3. Substances assigned to tank code L4BH in Column (12) of Table A of Chapter 3.2 or to another tank code permitted under the hierarchy in 4.3.4.1.2 may be carried in vacuum operated waste tanks with the letter "A" or "B" in part 3 of the tank code, as indicated in No. 9.5 of the vehicle approval certificate conforming to 9.1.2.1.5.

4.5.2 Operation

4.5.2.1 The provisions of Chapter 4.3 except those of 4.3.2.2.4 and 4.3.2.3.3 apply to the carriage in vacuum operated waste tanks and are supplemented by the provisions of 4.5.2.2 to 4.5.2.4 below.

4.5.2.2 For carriage of liquids classified as flammable, vacuum-operated waste tanks shall be filled through fillings which discharge into the tank at a low level. Provisions shall be made to minimize the production of spray.

4.5.2.3 When discharging flammable liquids with a flash-point below 23 °C by using air pressure, the maximum allowed pressure is 100 kPa (1 bar).

4.5.2.4 The use of tanks fitted with an internal piston operating as a compartment wall is allowed only when the substances on either side of the wall (piston) do not react dangerously with each other (see 4.3.2.3.6).

PART 5

Consignment procedures

CHAPTER 5.1

GENERAL PROVISIONS

5.1.1 Application and general provisions

This Part sets forth the provisions for dangerous goods consignments relative to marking, labelling, and documentation, and, where appropriate, authorization of consignments and advance notifications.

5.1.2 Use of overpacks

5.1.2.1 (a) An overpack shall be marked with the word "OVERPACK" and the UN number preceded by the letters "UN", and shall be labelled as required for packages in 5.2.2, for each item of dangerous goods contained in the overpack, unless the markings and the labels representative of all dangerous goods contained in the overpack are visible. If the same marking or the same label is required for different packages, it only needs to be applied once;

(b) Label conforming to model No. 11 illustrated in 5.2.2.2.2 shall be displayed on two opposite sides of the following overpacks:

- overpacks containing packages which shall be labelled in accordance with 5.2.2.1.12, unless the labels remain visible, and

- overpacks containing liquids in packages which need not be labelled in accordance with 5.2.2.1.12, unless the closures remain visible.

5.1.2.2 Each package of dangerous goods contained in an overpack shall comply with all applicable provisions of ADR. The "overpack" marking is an indication of compliance with this requirement. The intended function of each package shall not be impaired by the overpack.

5.1.2.3 The prohibitions on mixed loading also apply to these overpacks.

5.1.3 Empty uncleaned packagings (including IBCs and large packagings), tanks, vehicles and containers for carriage in bulk

5.1.3.1 Empty uncleaned packagings (including IBCs and large packagings), tanks (including tank-vehicles, battery-vehicles, demountable tanks, portable tanks, tank-containers, MEGCs), vehicles and containers for carriage in bulk having contained dangerous goods of the different classes other than Class 7, shall be marked and labelled as if they were full.

***NOTE**: For documentation, see Chapter 5.4.*

5.1.3.2 Tanks and IBCs used for the carriage of radioactive material shall not be used for the storage or carriage of other goods unless decontaminated below the level of 0.4 Bq/cm^2 for beta and gamma emitters and low toxicity alpha emitters and 0.04 Bq/cm^2 for all other alpha emitters.

5.1.4 Mixed packing

When two or more dangerous goods are packed within the same outer packaging, the package shall be labelled and marked as required for each substance or article. If the same label is required for different goods, it only needs to be applied once.

5.1.5 General provisions for Class 7

5.1.5.1 *Requirements before shipments*

5.1.5.1.1 *Requirements before the first shipment of a package*

Before the first shipment of any package, the following requirements shall be fulfilled:

(a) If the design pressure of the containment system exceeds 35 kPa (gauge), it shall be ensured that the containment system of each package conforms to the approved design requirements relating to the capability of that system to maintain its integrity under that pressure;

(b) For each Type B(U), Type B(M) and Type C package and for each package containing fissile material, it shall be ensured that the effectiveness of its shielding and containment and, where necessary, the heat transfer characteristics and the effectiveness of the confinement system, are within the limits applicable to or specified for the approved design;

(c) For packages containing fissile material, where, in order to comply with the requirements of 6.4.11.1, neutron poisons are specifically included as components of the package, checks shall be performed to confirm the presence and distribution of those neutron poisons.

5.1.5.1.2 *Requirements before each shipment of a package*

Before each shipment of any package, the following requirements shall be fulfilled:

(a) For any package it shall be ensured that all the requirements specified in the relevant provisions of ADR have been satisfied;

(b) It shall be ensured that lifting attachments which do not meet the requirements of 6.4.2.2 have been removed or otherwise rendered incapable of being used for lifting the package, in accordance with 6.4.2.3;

(c) For each Type B(U), Type B(M) and Type C package and for each package containing fissile material, it shall be ensured that all the requirements specified in the approval certificates have been satisfied;

(d) Each Type B(U), Type B(M) and Type C package shall be held until equilibrium conditions have been approached closely enough to demonstrate compliance with the requirements for temperature and pressure unless an exemption from these requirements has received unilateral approval;

(e) For each Type B(U), Type B(M) and Type C package, it shall be ensured by inspection and/or appropriate tests that all closures, valves, and other openings of the containment system through which the radioactive contents might escape are properly closed and, where appropriate, sealed in the manner for which the demonstrations of compliance with the requirements of 6.4.8.7 were made;

(f) For each special form radioactive material, it shall be ensured that all the requirements specified in the approval certificate and the relevant provisions of ADR have been satisfied;

(g) For packages containing fissile material the measurement specified in 6.4.11.4 (b) and the tests to demonstrate closure of each package as specified in 6.4.11.7 shall be performed where applicable;

(h) For each low dispersible radioactive material, it shall be ensured that all the requirements specified in the approval certificate and the relevant provisions of ADR have been satisfied.

5.1.5.2 ***Approval of shipments and notification***

5.1.5.2.1 *General*

In addition to the approval for package designs described in Chapter 6.4, multilateral shipment approval is also required in certain circumstances (5.1.5.2.2 and 5.1.5.2.3). In some circumstances it is also necessary to notify competent authorities of a shipment (5.1.5.2.4).

5.1.5.2.2 *Shipment approvals*

Multilateral approval shall be required for:

(a) the shipment of Type B(M) packages not conforming with the requirements of 6.4.7.5 or designed to allow controlled intermittent venting;

(b) the shipment of Type B(M) packages containing radioactive material with an activity greater than 3000 A_1 or 3000 A_2, as appropriate, or 1000 TBq, whichever is the lower;

(c) the shipment of packages containing fissile materials if the sum of the criticality safety indexes of the packages exceeds 50;

except that a competent authority may authorize carriage into or through its country without shipment approval, by a specific provision in its design approval (see 5.1.5.3.1).

5.1.5.2.3 *Shipment approval by special arrangement*

Provisions may be approved by a competent authority under which a consignment, which does not satisfy all of the applicable requirements of ADR may be carried under special arrangement (see 1.7.4).

5.1.5.2.4 *Notifications*

Notification to competent authorities is required as follows:

(a) Before the first shipment of any package requiring competent authority approval, the consignor shall ensure that copies of each applicable competent authority certificate applying to that package design have been submitted to the competent authority of each country through or into which the consignment is to be carried. The consignor is not required to await an acknowledgement from the competent authority, nor is the competent authority required to make such acknowledgement of receipt of the certificate;

(b) For each of the following types of shipments:

(i) Type C packages containing radioactive material with an activity greater than 3000 A_1 or 3000 A_2, as appropriate, or 1000 TBq, whichever is the lower;

(ii) Type B(U) packages containing radioactive material with an activity greater than 3000 A_1 or 3000 A_2, as appropriate, or 1000 TBq, whichever is the lower;

(iii) Type B(M) packages;

(iv) Shipment under special arrangement;

The consignor shall notify the competent authority of each country through or into which the consignment is to be carried. This notification shall be in the hands of each competent authority prior to the commencement of the shipment, and preferably at least 7 days in advance;

(c) The consignor is not required to send a separate notification if the required information has been included in the application for shipment approval;

(d) The consignment notification shall include:

(i) sufficient information to enable the identification of the package or packages including all applicable certificate numbers and identification marks;

(ii) information on the date of shipment, the expected date of arrival and proposed routeing;

(iii) the name(s) of the radioactive material(s) or nuclide(s);

(iv) descriptions of the physical and chemical forms of the radioactive material, or whether it is special form radioactive material or low dispersible radioactive material; and

(v) the maximum activity of the radioactive contents during carriage expressed in becquerels (Bq) with an appropriate SI prefix (see 1.2.2.1). For fissile material, the mass of fissile material in grams (g), or multiples thereof, may be used in place of activity.

5.1.5.3 ***Certificates issued by the competent authority***

5.1.5.3.1 Certificates issued by the competent authority are required for the following:

(a) Designs for:

(i) special form radioactive material;

(ii) low dispersible radioactive material;

(iii) packages containing 0.1 kg or more of uranium hexafluoride;

(iv) all packages containing fissile material unless excepted by 6.4.11.2;

(v) Type B(U) packages and Type B(M) packages;

(vi) Type C packages;

(b) Special arrangements;

(c) Certain shipments (see 5.1.5.2.2).

The certificates shall confirm that the applicable requirements are met, and for design approvals shall attribute to the design an identification mark.

The package design and shipment approval certificates may be combined into a single certificate.

Certificates and applications for these certificates shall be in accordance with the requirements in 6.4.23.

5.1.5.3.2 The consignor shall be in possession of a copy of each applicable certificate. The consignor shall also have a copy of any instructions with regard to the proper closing of the package and any preparation for shipment before making any shipment under the terms of the certificates.

5.1.5.3.3 For package designs where a competent authority issued certificate is not required, the consignor shall, on request, make available for inspection by the competent authority, documentary evidence of the compliance of the package design with all the applicable requirements.

5.1.5.4 ***Summary of approval and prior notification requirements***

NOTE 1*: Before first shipment of any package requiring competent authority approval of the design, the consignor shall ensure that a copy of the approval certificate for that design has been submitted to the competent authority of each country en route (see 5.1.5.2.4 (a)).*

NOTE 2*: Notification required if contents exceed 3 H* 10^3 A_1*, or 3 H* 10^3 A_2*, or 1000 TBq; (see 5.1.5.2.4 (b)).*

NOTE 3*: Multilateral approval of shipment required if contents exceed 3 H* 10^3 A_1*, or 3 H* 10^3 A_2*, or 1000 TBq, or if controlled intermittent venting is allowed (see 5.1.5.2).*

NOTE 4*: See approval and prior notification provisions for the applicable package for carrying this material.*

Subject	UN Number	Competent Authority approval required		Consignor required to notify the competent authorities of the country of origin and of the countries en route [a] before each shipment	Reference
		Country of origin	Countries en route [a]		
Calculation of unlisted A_1 and A_2 values	-	Yes	Yes	No	---
Excepted packages - package design - shipment	2908, 2909, 2910, 2911	 No No	 No No	 No No	---
LSA material [b] and SCO [b] Industrial packages types 1, 2 or 3, non fissile and fissile excepted	2912, 2913, 3321, 3322				---
- package design - shipment		No No	No No	No No	
Type A packages [b], non fissile and fissile excepted - package design - shipment	2915, 3332	 No No	 No No	 No No	--
Type B(U) packages [b], non fissile and fissile excepted - package design - shipment	2916	 Yes No	 No No	 See Note 1 See Note 2	5.1.5.2.4 (b), 5.1.5.3.1 (a), 6.4.22.2
Type B(M) packages [b], non fissile and fissile excepted - package design - shipment	2917	 Yes See Note 3	 Yes See Note 3	 No Yes	5.1.5.2.4 (b), 5.1.5.3.1 (a), 5.1.5.2.2, 6.4.22.3
Type C packages [b], non fissile and fissile excepted - package design - shipment	3323	 Yes No	 No No	 See Note 1 See Note 2	5.1.5.2.4 (b), 5.1.5.3.1 (a), 6.4.22.2
Packages for fissile material - package design - shipment : - sum of criticality safety indexes not more than 50 - sum of criticality safety indexes greater than 50	2977, 3324, 3325, 3326, 3327, 3328, 3329, 3330, 3331, 3333	 Yes [c] No [d] Yes	 Yes [c] No [d] Yes	 No See Note 2 See Note 2	5.1.5.3.1 (a), 5.1.5.2.2, 6.4.22.4, 6.4.22.5
Special form radioactive material - design - shipment	 - See Note 4	 Yes See Note 4	 No See Note 4	 No See Note 4	1.6.6.3, 5.1.5.3.1 (a) 6.4.22.5

[a] *Countries from, through or into which the consignment is carried.*

[b] *If the radioactive contents are fissile material which is not excepted from the provisions for packages containing fissile material, then the provisions for fissile material packages apply (see 6.4.11).*

[c] *Designs of packages for fissile material may also require approval in respect of one of the other items in the table.*

[d] *Shipments may, however, require approval in respect of one of the other items in the table.*

Subject	UN Number	Competent Authority approval required		Consignor required to notify the competent authorities of the country of origin and of the countries en route [a] before each shipment	Reference
		Country of origin	Countries en route [a]		
Low dispersable radioactive material - design - shipment	- See Note 4	Yes See Note 4	No See Note 4	No See Note 4	5.1.5.3.1 (a), 6.4.22.3
Packages containing 0.1 kg or more of uranium hexafluoride - design - shipment	- See Note 4	Yes See Note 4	No See Note 4	No See Note 4	5.1.5.3.1 (a), 6.4.22.1
Special Arrangement - shipment	2919, 3331	Yes	Yes	Yes	1.7.4.2, 5.1.5.3.1 (b), 5.1.5.2.4 (b)
Approved packages designs subjected to transitional measures	-	See 1.6.6	See 1.6.6	See Note 1	1.6.6.1, 1.6.6.2, 5.1.5.2.4 (b), 5.1.5.3.1 (a), 5.1.5.2.2.

[a] *Countries from, through or into which the consignment is carried.*

CHAPTER 5.2

MARKING AND LABELLING

5.2.1 Marking of packages

***NOTE**: For markings related to the construction, testing and approval of packagings, large packagings, gas receptacles and IBCs, see Part 6.*

5.2.1.1 Unless provided otherwise in ADR, the UN number corresponding to the dangerous goods contained, preceded by the letters "UN" shall be clearly and durably marked on each package. In the case of unpackaged articles the marking shall be displayed on the article, on its cradle or on its handling, storage or launching device.

5.2.1.2 All package markings required by this Chapter:

(a) shall be readily visible and legible;
(b) shall be able to withstand open weather exposure without a substantial reduction in effectiveness.

5.2.1.3 Salvage packagings shall additionally be marked with the word "**SALVAGE**".

5.2.1.4 Intermediate bulk containers of more than 450 litres capacity shall be marked on two opposite sides.

5.2.1.5 ***Additional provisions for goods of Class 1***

For goods of Class 1, packages shall, in addition, bear the proper shipping name as determined in accordance with 3.1.2. The marking, which shall be clearly legible and indelible, shall be in an official language of the country of origin and also, if that language is not English, French or German, in English, French or German unless any agreements concluded between the countries concerned in the transport operation provide otherwise.

5.2.1.6 ***Additional provisions for goods of Class 2***

Refillable receptacles shall bear the following particulars in clearly legible and durable characters:

(a) the UN number and the proper shipping name of the gas or mixture of gases, as determined in accordance with 3.1.2.
In the case of gases classified under an N.O.S. entry, only the technical name [1] of the gas has to be indicated in addition to the UN number.
In the case of mixtures, not more than the two constituents which most predominantly contribute to the hazards have to be indicated;

---

[1] *Instead of the proper shipping name or, if applicable, of the proper shipping name of the n.o.s. entry followed by the technical name, the use of the following names is permitted:*

- *for UN No. 1078 refrigerant gas, n.o.s: mixture F1, mixture F2, mixture F3;*
- *for UN No. 1060 methylacetylene and propadiene mixtures, stabilized: mixture P1, mixture P2;*
- *for UN No. 1965 hydrocarbon gas mixture, liquefied, n.o.s: mixture A, mixture A01, mixture A02, mixture A0, mixture A1, mixture B1, mixture B2, mixture B, mixture C. The names customary in the trade and mentioned in 2.2.2.3, Classification code 2F, UN No. 1965, Note 1 may be used only as a complement;*
- *for UN No. 1010 Butadienes, stabilized: 1,2-Butadiene, stabilized, 1,3-Butadiene, stabilized.*

(b) for compressed gases filled by mass and for liquefied gases, either the maximum filling mass and the tare of the receptacle with fittings and accessories as fitted at the time of filling, or the gross mass;

(c) the date (year) of the next periodic inspection.

These marks can either be engraved or indicated on a durable information disk or label attached on the receptacle or indicated by an adherent and clearly visible marking such as by printing or by any equivalent process.

NOTE 1: *See also 6.2.1.7.*

NOTE 2: *For non refillable receptacles, see 6.2.1.8.*

5.2.1.7 ***Special marking provisions for goods of Class 7***

5.2.1.7.1 Each package shall be legibly and durably marked on the outside of the packaging with an identification of either the consignor or consignee, or both.

5.2.1.7.2 For each package, other than excepted packages, the UN number preceded by the letters "UN" and the proper shipping name shall be legibly and durably marked on the outside of the packaging. In the case of excepted packages only the UN number, preceded by the letters "UN", is required.

5.2.1.7.3 Each package of gross mass exceeding 50 kg shall have its permissible gross mass legibly and durably marked on the outside of the packaging.

5.2.1.7.4 Each package which conforms to:

(a) a Type IP-1 package, a Type IP-2 package or a Type IP-3 package design shall be legibly and durably marked on the outside of the packaging with "TYPE IP-1", "TYPE IP-2" or "TYPE IP-3" as appropriate;

(b) a Type A package design shall be legibly and durably marked on the outside of the packaging with "TYPE A";

(c) a Type IP-2 package, a Type IP-3 package or a Type A package design shall be legibly and durably marked on the outside of the packaging with the international vehicle registration code (VRI Code) [2] of the country of origin of design and the name of the manufacturers, or other identification of the packaging specified by the competent authority.

5.2.1.7.5 Each package which conforms to a design approved by the competent authority shall be legibly and durably marked on the outside of the packaging with:

(a) the identification mark allocated to that design by the competent authority;

(b) a serial number to uniquely identify each packaging which conforms to that design;

(c) in the case of a Type B(U) or Type B(M) package design, with "TYPE B(U)" or "TYPE B(M)"; and

(d) in the case of a Type C package design, with "TYPE C".

---

[2] *Distinguishing sign for motor vehicles in international traffic prescribed in the Vienna Convention on Road Traffic (1968).*

5.2.1.7.6 Each package which conforms to a Type B(U), Type B(M) or Type C package design shall have the outside of the outermost receptacle which is resistant to the effects of fire and water plainly marked by embossing, stamping or other means resistant to the effects of fire and water with the trefoil symbol shown in the figure below.

Basic trefoil symbol with proportions based on a central circle of radius X.
The minimum allowable size of X shall be 4 mm.

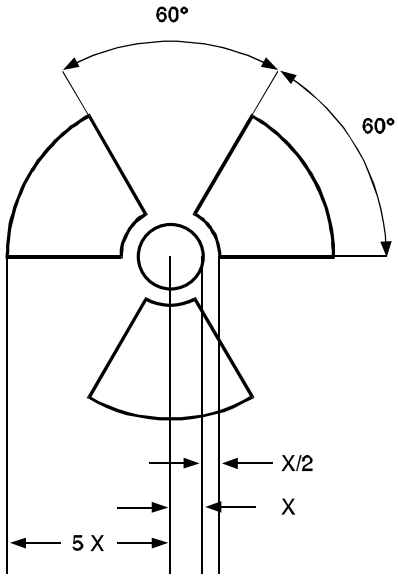

5.2.1.7.7 Where LSA-I or SCO-I material is contained in receptacles or wrapping materials and is carried under exclusive use as permitted by 4.1.9.2.3, the outer surface of these receptacles or wrapping materials may bear the marking "RADIOACTIVE LSA-I" or "RADIOACTIVE SCO-I", as appropriate.

5.2.2 Labelling of packages

5.2.2.1 ***Labelling provisions***

5.2.2.1.1 For each article or substance listed in Table A of Chapter 3.2, the labels shown in Column (5) shall be affixed unless otherwise provided for by a special provision in Column (6).

5.2.2.1.2 Indelebile danger markings corresponding exactly to the prescribed models may be used instead of labels.

5.2.2.1.3 to
5.2.2.1.5 *(Reserved)*

5.2.2.1.6 Except as provided in 5.2.2.2.1.2, each label shall:

(a) be affixed to the same surface of the package, if the dimensions of the package allow; for packages of Class1 and 7, near the mark indicating the proper shipping name;

(b) be so placed on the package that it is not covered or obscured by any part or attachment to the packaging or any other label or marking; and

(c) be displayed next to each other when more than one label is required.

Where a package is of such an irregular shape or small size that a label cannot be satisfactorily affixed, the label may be attached to the package by a securely affixed tag or other suitable means.

5.2.2.1.7 Intermediate bulk containers of more than 450 litres capacity shall be labelled on two opposite sides.

5.2.2.1.8 *(Reserved)*

5.2.2.1.9 *Special provisions for the labelling of self-reactive substances and organic peroxides*

(a) The label conforming to model No. 4.1 also implies that the product may be flammable and hence no label conforming to model No. 3 is required. In addition, a label conforming to model No. 1 shall be applied for self-reactive substances Type B, unless the competent authority has permitted this label to be dispensed with for a specific packaging because test data have proven that the self-reactive substance in such a packaging does not exhibit explosive behaviour.

(b) The label conforming to model No. 5.2 also implies that the product may be flammable and hence no label conforming to model No. 3 is required. In addition, the following labels shall be applied:

(i) A label conforming to model No. 1 for organic peroxides type B, unless the competent authority has permitted this label to be dispensed with for a specific packaging because test data have proven that the organic peroxide in such a packaging does not exhibit explosive behaviour;

(ii) A label conforming to model No. 8 is required when Packing Group I or II criteria of Class 8 are met.

For self-reactive substances and organic peroxides mentioned by name, the labels to be affixed are indicated in the list found in 2.2.41.4 and 2.2.52.4 respectively.

5.2.2.1.10 *Special provisions for the labelling of infectious substances packages*

In addition to the label conforming to model No. 6.2, infectious substances packages shall bear any other label required by the nature of the contents.

5.2.2.1.11 *Special provisions for the labelling of radioactive material*

5.2.2.1.11.1 Except as provided for large containers and tanks in accordance with 5.3.1.1.3, each package, overpack and container containing radioactive material shall bear at least two labels which conform to the models Nos.7A, 7B, and 7C as appropriate according to the category (see 2.2.7.8.4) of that package, overpack or container. Labels shall be affixed to two opposite sides on the outside of the package or on the outside of all four sides of the container. Each overpack containing radioactive material shall bear at least two labels on opposite sides of the outside of the overpack. In addition, each package, overpack and container containing fissile material, other than fissile material excepted under 6.4.11.2 shall bear labels which conform to model No.7E; such labels, where applicable shall be affixed adjacent to the labels for radioactive material. Labels shall not cover the markings specified in 5.2.1. Any labels which do not relate to the contents shall be removed or covered.

5.2.2.1.11.2 Each label conforming to models Nos.7A, 7B, and 7C shall be completed with the following information.

(a) *Contents*:

(i) except for LSA-I material, the name(s) of the radionuclide(s) as taken from Table 2.2.7.7.2.1, using the symbols prescribed therein. For mixtures of radionuclides, the most restrictive nuclides shall be listed to the extent the space on the line permits. The group of LSA or SCO shall be shown following the name(s) of the radionuclide(s). The terms "LSA-II","LSA-III", "SCO-I" and "SCO-II" shall be used for this purpose;

(ii) for LSA-I material, only the term "LSA-I" is necessary; the name of the radionuclide is not necessary;

(b) *Activity*: The maximum activity of the radioactive contents during carriage expressed in becquerels (Bq) with the appropriate SI prefix (see 1.2.2.1). For fissile material, the mass of fissile material in grams (g), or multiples thereof, may be used in place of activity;

(c) For overpacks and containers the "contents" and "activity" entries on the label shall bear the information required in (a) and (b) above, respectively, totalled together for the entire contents of the overpack or container except that on labels for overpacks or containers containing mixed loads of packages containing different radionuclides, such entries may read "See Transport Documents";

(d) *Transport index*: see 2.2.7.6.1.1 and 2.2.7.6.1.2 (no transport index entry is required for category I-WHITE).

5.2.2.1.11.3 Each label conforming to the model No. 7E shall be completed with the criticality safety index (CSI) as stated in the certificate of approval for special arrangement or the certificate of approval for the package design issued by the competent authority.

5.2.2.1.11.4 For overpacks and containers, the criticality safety index (CSI) on the label shall bear the information required in 5.2.2.1.11.3 totalled together for the fissile contents of the overpack or container.

5.2.2.1.12 *Additional labelling*

With the exception of Classes 1 and 7, label conforming to model No. 11 illustrated in 5.2.2.2.2 shall be displayed on two opposite sides of a package on the following packages:

- packages containing liquids in receptacles, the closures of which are not visible from the outside;

- packages containing vented receptacles or vented receptacles without outer packaging; and

- packages containing refrigerated liquefied gases.

5.2.2.2 ***Provisions for labels***

5.2.2.2.1 Labels shall satisfy the provisions below and conform, in terms of colour, symbols and general format, to the models shown in 5.2.2.2.2.

5.2.2.2.1.1 Labels, except label conforming to model No. 11, shall be in the form of a square set at an angle of 45° (diamond-shaped) with minimum dimensions of 100 mm by 100 mm. They have a line of the same colour as the symbol, 5 mm inside the edge and running parallel with it. Label conforming to model No. 11 shall be rectangular, of standard format A5 (148H210 mm). For receptacles intended for the carriage of refrigerated liquefied gases, the standard format of A7 (74 × 105 mm) may also be used. If the size of the package so requires, the dimensions of the labels may be reduced, provided that they remain clearly visible.

5.2.2.2.1.2 Cylinders for Class 2 may, on account of their shape, orientation and securing mechanisms for carriage, bear labels representative of those specified in this section, which have been reduced in size, according to the dimensions outlined in ISO 7225:1994, *"Gas cylinders - Precautionary labels"*, for display on the non-cylindrical part (shoulder) of such cylinders. Notwithstanding the provisions of 5.2.2.1.6, labels may overlap to the extent provided for by ISO 7225. However, in all cases, the primary risk label and the figures appearing on any label shall remain fully visible and the symbols recognizable.

5.2.2.2.1.3 Labels, except label conforming to model No.11, are divided into halves. With the exception of Divisions 1.4, 1.5 and 1.6, the upper half of the label is reserved for the pictorial symbol and the lower half for texts and the class number and the compatibility group letter as appropriate.

NOTE*: For the labels of Classes 1, 2, 3, 5.1, 5.2, 7, 8 and 9, the respective class number shall be shown in the bottom corner. For the labels of Classes 4.1, 4.2 and 4.3 and of Classes 6.1 and 6.2 only figures 4 and 6 respectively shall be shown in the bottom corner (see 5.2.2.2.2).*

5.2.2.2.1.4 Except for Divisions 1.4, 1.5 and 1.6, labels for Class 1 show in the lower half the division number and compatibility group letter for the substance or article. Labels for Divisions 1.4, 1.5 and 1.6 show in the upper half the division number and in the lower half the compatibility group letter.

5.2.2.2.1.5 On labels other than those for material of Class 7, the optional insertion of any text (other than the class number) in the space below the symbol shall be confined to particulars indicating the nature of the risk and precautions to be taken in handling.

5.2.2.2.1.6 The symbols, text and numbers shall be clearly legible and indelible and shall be shown in black on all labels except for:

(a) the Class 8 label, where the text (if any) and class number shall appear in white;

(b) labels with entirely green, red or blue backgrounds where they may be shown in white; and

(c) labels conforming to model No. 2.1 displayed on cylinders and gas cartridges for gases of UN Nos. 1011, 1075, 1965 and 1978, where they may be shown in the background colour of the receptacle if adequate contrast is provided.

5.2.2.2.1.7 All labels shall be able to withstand open weather exposure without a substantial reduction in effectiveness.

5.2.2.2.2 *Specimen labels*

CLASS 1 HAZARD
Explosive substances or articles

(No.1)
Divisions 1.1, 1.2 and 1.3
Symbol (exploding bomb): black; Background: orange; Figure '1' in bottom corner

(No 1.4)
Division 1.4

(No 1.5)
Division 1.5

(No 1.6)
Division 1.6

Background: orange; Figures: black; Numerals shall be about 30 mm in height
and be about 5 mm thick (for a label measuring 100 mm x 100 mm); Figure '1' in bottom corner

** Place for division - to be left blank if explosive is the subsidiary risk
* Place for compatibility group - to be left blank if explosive is the subsidiary risk

CLASS 2 HAZARD
Gaz

(No.2.1)
Flammable gases
Symbol (flame): black or white;
(except as provided for in 5.2.2.2.1.6 c))
Background: red; Figure '2' in bottom corner

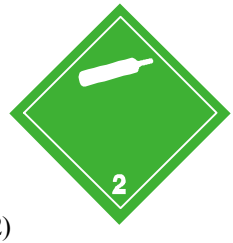

(No.2.2)
Non flammable, non-toxic gases
Symbol (gas cylinder): black or white;
Background: green; Figure '2' in bottom corner

(No 2.3)
Toxic gases
Symbol (skull and crossbones): black;
Background: white; Figure '2' in bottom corner

CLASS 3 HAZARD
Flammable liquids

(No 3)
Symbol (flame): black or white;
Background: red; Figure '3' in bottom corner

CLASS 4.1 HAZARD
Flammable solids, self-reactive substances and desensitized explosives

(No 4.1)
Symbol (flame): black;
Background: white with seven vertical red stripes;
Figure '4' in bottom corner

CLASS 4.2 HAZARD
Substances liable to spontaneous combustion

(No 4.2)
Symbol (flame): black;
Background: upper half white, lower half red;
Figure '4' in bottom corner

CLASS 4.3 HAZARD
Substances which, in contact with water, emit flammable gases

(No 4.3)
Symbol (flame): black or white;
Background: blue;
Figure '4' in bottom corner

CLASS 5.1 HAZARD
Oxidizing substances

(No 5.1)

CLASS 5.2 HAZARD
Organic peroxides

(No 5.2)

Symbol (flame over circle): black; Background: yellow;
Figures '5.1' in bottom corner
Figures '5.2' in bottom corner

CLASS 6.1 HAZARD
Toxic substances

(No 6.1)
Symbol (skull and crossbones): black;
Background: white; Figure '6' in bottom corner

CLASS 6.2 HAZARD
Infectious substances

(No 6.2)
The lower half of the label may bear the inscriptions: 'INFECTIOUS SUBSTANCE' and 'In the case of damage or leakage immediately notify Public Health Authority';
Symbol (three crescents superimposed on a circle) and inscriptions: black;
Background: white; Figure '6' in bottom corner

CLASS 7 HAZARD
Radioactive material

(No. 7A)
Category I - White
Symbol (trefoil): black;
Background: white;
Text (mandatory): black in lower half of label:
'RADIOACTIVE'
'CONTENTS .....'
'ACTIVITY .....'
One red bar shall
follow the word 'RADIOACTIVE';
Figure '7' in bottom corner.

(No 7B)
Category II - Yellow

(No 7C)
Category III - Yellow

Symbol (trefoil): black;
Background: upper half yellow with white border, lower half white;
Text (mandatory): black in lower half of label:
'RADIOACTIVE'
'CONTENTS .....'
'ACTIVITY .....'
In a black outlined box: 'TRANSPORT INDEX';
Two red vertical bars shall follow the word 'RADIOACTIVE'; Three red vertical bars shall follow the word 'RADIOACTIVE';
Figure '7' in bottom corner.

(No. 7E)
Class 7 fissile material
Background: white;
Text (mandatory): black in upper half of label: 'FISSILE';
In a black outlined box in the lower half of the label:
'CRITICALITY SAFETY INDEX'
Figure '7' in bottom corner.

CLASS 8 HAZARD
Corrosive substances

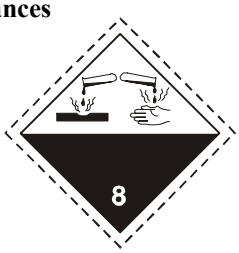

(No. 8)
Symbol (liquids, spilling from two glass vessels
and attacking a hand and a metal): black;
Background: upper half white;
lower half black with white border;
Figure '8' in bottom corner

CLASS 9 HAZARD
Miscellaneous dangerous substances and articles

(No. 9)
Symbol (seven vertical stripes in upper half): black;
Background: white;
Figure '9' underlined in bottom corner

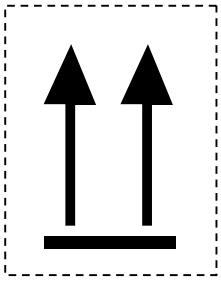

or

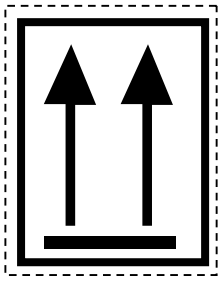

Two black or red arrows on white
or suitable contrasting background

CHAPTER 5.3

PLACARDING AND MARKING OF CONTAINERS, MEGCs, TANK-CONTAINERS, PORTABLE TANKS AND VEHICLES

NOTE: *For marking and placarding of containers, MEGCs, tank-containers and portable tanks for carriage in a transport chain including a maritime journey, see also 1.1.4.2.1. If the provisions of 1.1.4.2.1 (c) are applied, only 5.3.1.3 and 5.3.2.1.1 of this Chapter are applicable.*

5.3.1 Placarding

5.3.1.1 *General provisions*

5.3.1.1.1 As and when required in this section, placards shall be affixed to the exterior surface of containers, MEGCs, tank-containers, portable tanks and vehicles. Placards shall correspond to the labels required in Column (5) and, where appropriate, Column (6) of Table A of Chapter 3.2 for the dangerous goods contained in the container, MEGC, tank-container, portable tank or vehicle and shall conform to the specifications given in 5.3.1.7.

5.3.1.1.2 For Class 1, compatibility groups shall not be indicated on placards if the vehicle or container is carrying substances or articles belonging to two or more compatibility groups. Vehicles or containers carrying substances or articles of different divisions shall bear only placards conforming to the model of the most dangerous division in the order:

1.1 (most dangerous), 1.5, 1.2, 1.3, 1.6, 1.4 (least dangerous).

When 1.5 D substances are carried with substances or articles of Division 1.2, the vehicle or container shall be placarded as Division 1.1.

5.3.1.1.3 For Class 7, the primary risk placard shall conform to model No. 7D as specified in 5.3.1.7.2. This placard is not required for vehicles or containers carrying excepted packages and for small containers.

Where both Class 7 labels and placards would be required to be affixed to vehicles, containers, MEGCs, tank-containers or portable tanks, an enlarged label corresponding to the label required may be displayed instead of placard No.7D to serve both purposes.

5.3.1.1.4 Containers, MEGCs, tank-containers, portable tanks or vehicles containing goods of more than one class need not bear a subsidiary risk placard if the hazard represented by that placard is already indicated by a primary or subsidiary risk placard.

5.3.1.1.5 Placards which do not relate to the dangerous goods being carried, or residues thereof, shall be removed or covered.

5.3.1.2 *Placarding of containers, MEGCs, tank-containers and portable tanks*

NOTE*: This sub-section does not apply to swap-bodies, except tank swap bodies or swap-bodies carried in combined road/rail transport.*

The placards shall be affixed to both sides and at each end of the container, MEGC, tank-container or portable tank.

When the tank-container or portable tank has multiple compartments and carries two or more dangerous goods, the appropriate placards shall be displayed along each side at the position of the relevant compartments and one placard of each model shown on each side at both ends.

5.3.1.3 ***Placarding of vehicles carrying containers, MEGCs, tank-containers or portable tanks***

NOTE: *This sub-section does not apply to the placarding of vehicles carrying swap-bodies other than tank swap-bodies or than swap-bodies carried in combined road/rail transport; for such vehicles, see 5.3.1.5.*

If the placards affixed to the containers, MEGCs, tank-containers or portable tanks are not visible from outside the carrying vehicles, the same placards shall also be affixed to both sides and at the rear of the vehicle. Otherwise, no placard need be affixed on the carrying vehicle.

5.3.1.4 ***Placarding of vehicles for carriage in bulk, tank-vehicles, battery vehicles and vehicles with demountable tanks***

Placards shall be affixed to both sides and at the rear of the vehicle.

When the tank-vehicle or the demountable tank carried on the vehicle has multiple compartments and carries two or more dangerous goods, the appropriate placards shall be displayed along each side at the position of the relevant compartments and one placard of each model shown on each side at the rear of the vehicle. However, in such case, if all compartments have to bear the same placards, these placards need be displayed only once along each side and at the rear of the vehicle.

Where more than one placard is required for the same compartment, these placards shall be displayed adjacent to each other.

NOTE: *When, in the course of an ADR journey or at the end of an ADR journey, a tank semi-trailer is separated from its tractor to be loaded on board a ship or an inland navigation vessel, placards shall also be displayed at the front of the semi-trailer.*

5.3.1.5 ***Placarding of vehicles carrying packages only***

NOTE: *This sub-section applies also to vehicles carrying swap-bodies loaded with packages, except for combined road/rail transport; for combined road/rail transport, see 5.3.1.2 and 5.3.1.3.*

5.3.1.5.1 For vehicles carrying packages containing substances or articles of Class 1, placards shall be affixed to both sides and at the rear of the vehicle.

5.3.1.5.2 For vehicles carrying radioactive material of Class 7 in packagings or IBCs (other than excepted packages), placards shall be affixed to both sides and at the rear of the vehicle.

NOTE: *If, during an ADR journey, a vehicle carrying packages containing dangerous goods of classes other than Classes 1 and 7 is loaded on board a ship for sea transport or if the ADR journey precedes a voyage by sea, placards shall be affixed to both sides and at the rear of the vehicle. Placards may remain affixed to both sides and at the rear of the vehicle after a sea voyage.*

5.3.1.6 ***Placarding of empty tank-vehicles, battery-vehicles, MEGCs, tank-containers, portable tanks and empty vehicles and containers for carriage in bulk***

5.3.1.6.1 Empty tank-vehicles, vehicles with demountable tanks, battery-vehicles, MEGCs, tank-containers and portable tanks uncleaned and not degassed, and empty vehicles and containers for carriage in bulk, uncleaned, shall continue to display the placards required for the previous load.

5.3.1.7 ***Specifications for placards***

5.3.1.7.1 Except as provided in 5.3.1.7.2 for the Class 7 placard, a placard shall:

(a) Be not less than 250 mm by 250 mm, with a line of the same colour as the symbol running 12.5mm inside the edge and parallel with it;

(b) Correspond to the label required for the dangerous goods in question with respect to colour and symbol (see 5.2.2.2); and

(c) Display the numbers (and for goods of Class 1, the compatibility group letter) prescribed for the dangerous goods in question in 5.2.2.2 for the corresponding label, in digits not less than 25 mm high.

5.3.1.7.2 The Class 7 placard shall be not less than 250 mm by 250 mm with a black line running 5 mm inside the edge and parallel with it and is otherwise as shown below (Model No. 7D). The number "7" shall not be less than 25 mm high. The background colour of the upper half of the placard shall be yellow and of the lower half white, the colour of the trefoil and the printing shall be black. The use of the word "RADIOACTIVE" in the bottom half is optional to allow the use of this placard to display the appropriate UN number for the consignment.

Placard for radioactive material of Class 7

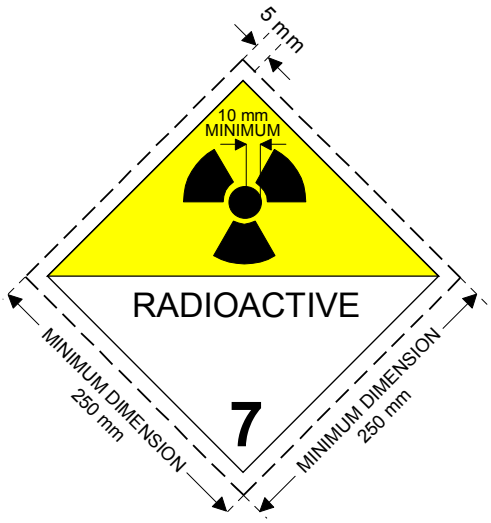

(No.7D)
Symbol (trefoil): black; Background: upper half yellow with
white border, lower half white;
The lower half shall show the word "RADIOACTIVE" or alternatively, when required,
the appropriate UN Number (see 5.3.2.1.2)
and the figure "7" in the bottom corner.

5.3.1.7.3 For tanks with a capacity of not more than 3 m^3 and for small containers, placards may be replaced by labels conforming to 5.2.2.2.

5.3.1.7.4 For Classes 1 and 7, if the size and construction of the vehicle are such that the available surface area is insufficient to affix the prescribed placards, their dimensions may be reduced to 100 mm on each side.

5.3.2 Orange-coloured plate marking

5.3.2.1 *General orange-coloured plate marking provisions*

5.3.2.1.1 Transport units carrying dangerous goods shall display two rectangular reflectorized orange-coloured plates conforming to 5.3.2.2.1, set in a vertical plane. They shall be affixed one at the front and the other at the rear of the transport unit, both perpendicular to the longitudinal axis of the transport unit. They shall be clearly visible.

5.3.2.1.2 When a hazard identification number is indicated in Column (20) of table A of Chapter 3.2, tank-vehicles, battery vehicles or transport units having one or more tanks carrying dangerous goods shall in addition display on the sides of each tank, each tank compartment or each element of battery vehicles, clearly visible and parallel to the longitudinal axis of the vehicle, orange-coloured plates identical with those prescribed in 5.3.2.1.1. These orange-coloured plates shall bear the hazard identification number and the UN number prescribed respectively in Columns (20) and (1) of table A of Chapter 3.2 for each of the substances carried in the tank, in a compartment of the tank or in an element of a battery vehicle.

5.3.2.1.3 For tank-vehicles or transport units having one or more tanks carrying substances with UN Nos. 1202, 1203 or 1223, or aviation fuel classed under UN Nos. 1268 or 1863, but no other dangerous substance, the orange-coloured plates prescribed in 5.3.2.1.2 need not be affixed if the plates affixed to the front and rear in accordance with 5.3.2.1.1 bear the hazard identification number and the UN number prescribed for the most hazardous substance carried, i.e. the substance with the lowest flash-point.

5.3.2.1.4 When a hazard identification number is indicated in Column (20) of Table A of Chapter 3.2, transport units and containers carrying dangerous solid substances in bulk or packaged radioactive material with a single UN number under exclusive use and no other dangerous goods shall in addition display on the sides of each transport unit or container, clearly visible and parallel to the longitudinal axis of the vehicle, orange-coloured plates identical with those prescribed in 5.3.2.1.1. These orange-coloured plates shall bear the hazard identification number and the UN number prescribed respectively in Columns (20) and (1) of table A of Chapter 3.2 for each of the substances carried in bulk in the transport unit or in the container or for the packaged radioactive material carried under exclusive use in the transport unit or in the container.

5.3.2.1.5 For containers carrying dangerous solid substances in bulk and for tanks-containers, MEGCs and portable tanks, the plates prescribed in 5.3.2.1.2 and 5.3.2.1.4 may be replaced by a self-adhesive sheet, by paint or by any other equivalent process, provided the material used for this purpose is weather-resistant and ensures durable marking. In this case, the provisions of the last sentence of 5.3.2.2.2, concerning resistance to fire, shall not apply.

5.3.2.1.6 For transport units carrying only one substance, the orange-coloured plates prescribed in 5.3.2.1.2 and 5.3.2.1.4 shall not be necessary provided that those displayed at the front and rear in accordance with 5.3.2.1.1 bear the hazard identification number and the UN number prescribed respectively in Columns (20) and (1) of Table A of Chapter 3.2.

5.3.2.1.7 The above requirements are also applicable to empty fixed or demountable tanks, tank-containers, MEGCs, portable tanks and battery-vehicles, uncleaned and not degassed and empty vehicles and empty containers for carriage in bulk, uncleaned.

5.3.2.1.8 Orange-coloured plates which do not relate to dangerous goods carried, or residues thereof, shall be removed or covered. If plates are covered, the covering shall be total and remain effective after 15 minute' engulfment in fire.

5.3.2.2 ***Specifications for the orange-coloured plates***

5.3.2.2.1 The reflectorized orange-coloured plates shall be of 40 cm base and of 30 cm high; they shall have a black border of 15 mm wide. The orange-coloured plates may be separated in their middle with a black horizontal line of 15 mm thickness. If the size and construction of the vehicle are such that the available surface area is insufficient to affix these orange-coloured plates, their dimensions may be reduced to 300 mm for the base, 120 mm for the height and 10 mm for the black border.

NOTE: *The colour of the orange plates in conditions of normal use should have chromaticity co-ordinates lying within the area on the chromaticity diagram formed by joining the following co-ordinates:*

Chromaticity co-ordinates of points at the corners of the area on the chromaticity diagram				
x	0.52	0.52	0.578	0.618
y	0.38	0.40	0.422	0.38

Luminance factor of reflectorized colour: $\beta > 0.12$.
Reference centre E, standard illuminant C, normal incidence 45°, viewed at 0°.
Co-efficient of reflex luminous intensity at an angle of illumination of 5°, viewed at 0.2°: not less than 20 candelas per lux per m^2.

5.3.2.2.2 The hazard identification number and the UN number shall consist of black digits 100 mm high and of 15 mm stroke thickness. The hazard-identification number shall be inscribed in the upper part of the plate and the UN number in the lower part; they shall be separated by a horizontal black line, 15 mm in stroke width, extending from side to side of the plate at mid-height (see 5.3.2.2.3).The hazard identification number and the UN number shall be indelible and shall remain legible after 15 minute' engulfment in fire.

5.3.2.2.3 *Example of orange-coloured plate with hazard identification number and UN number*

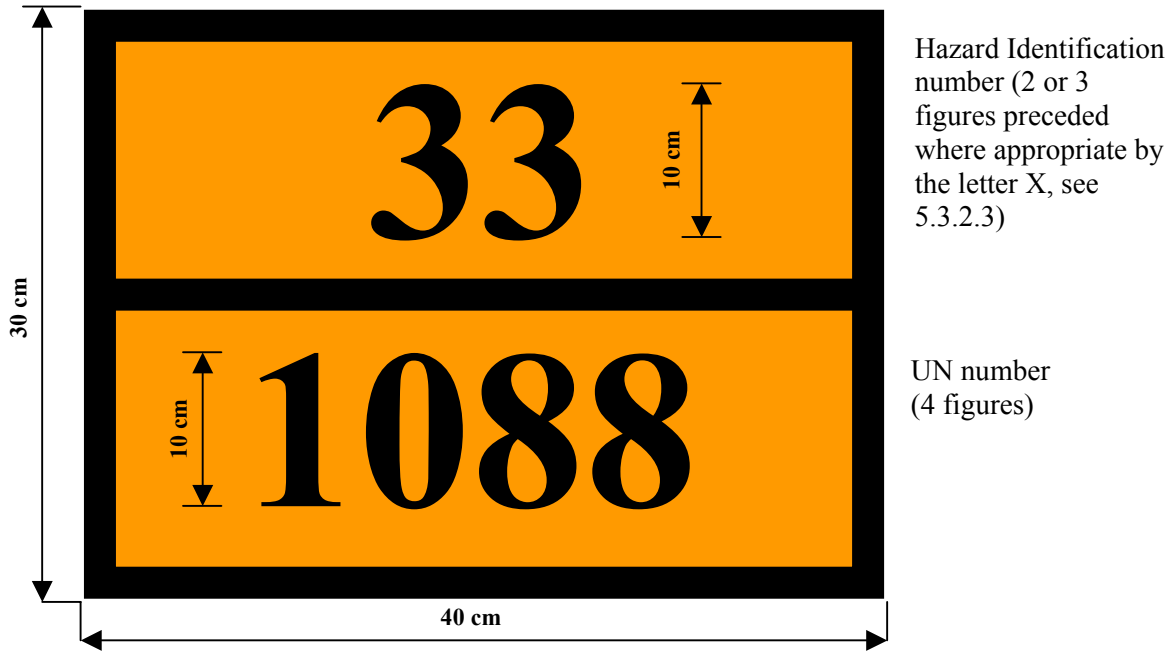

Background orange.
Border, horizontal line and figures black, 15 mm thickness.

5.3.2.2.4 The permitted tolerances for dimensions specified in this sub-section are ± 10%.

5.3.2.3 ***Meaning of hazard identification numbers***

5.3.2.3.1 The hazard identification number consists of two or three figures. In general, the figures indicate the following hazards:

2 Emission of gas due to pressure or to chemical reaction
3 Flammability of liquids (vapours) and gases or self-heating liquid
4 Flammability of solids or self-heating solid
5 Oxidizing (fire-intensifying) effect
6 Toxicity or risk of infection
7 Radioactivity
8 Corrosivity
9 Risk of spontaneous violent reaction

NOTE*: The risk of spontaneous violent reaction within the meaning of figure 9 include the possibility following from the nature of a substance of a risk of explosion, disintegration and polymerization reaction following the release of considerable heat or flammable and/or toxic gases.*

Doubling of a figure indicates an intensification of that particular hazard.

Where the hazard associated with a substance can be adequately indicated by a single figure, this is followed by zero.

The following combinations of figures, however, have a special meaning: 22, 323, 333, 362, 382, 423, 44, 446, 462, 482, 539, 606, 623, 642, 823, 842, 90 and 99, see 5.3.2.3.2 below.

If a hazard identification number is prefixed by the letter "X", this indicates that the substance will react dangerously with water. For such substances, water may only be used by approval of experts.

For substances of Class 1, the classification code in accordance with Column (3 b) of Table A of Chapter 3.2, shall be used as the hazard identification number. The classification code consists of:

- the division number in accordance with 2.2.1.1.5; and
- the compatibility group letter in accordance with 2.2.1.1.6.

5.3.2.3.2 The hazard identification numbers listed in Column (20) of table A of Chapter3.2 have the following meanings:

20	asphyxiant gas or gas with no subsidiary risk
22	refrigerated liquefied gas, asphyxiant
223	refrigerated liquefied gas, flammable
225	refrigerated liquefied gas, oxidizing (fire-intensifying)
23	flammable gas
239	flammable gas, which can spontaneously lead to violent reaction
25	oxidizing (fire-intensifying) gas
26	toxic gas
263	toxic gas, flammable
265	toxic gas, oxidizing (fire-intensifying)
268	toxic gas, corrosive
30	flammable liquid (flash-point between 23 °C and 61 °C, inclusive) or flammable liquid or solid in the molten state with a flash-point above 61 °C, heated to a temperature equal to or above its flash-point, or self-heating liquid
323	flammable liquid which reacts with water, emitting flammable gases
X323	flammable liquid which reacts dangerously with water, emitting flammable gases [1]
33	highly flammable liquid (flash-point below 23 °C)
333	pyrophoric liquid
X333	pyrophoric liquid which reacts dangerously with water [1]
336	highly flammable liquid, toxic
338	highly flammable liquid, corrosive
X338	highly flammable liquid, corrosive, which reacts dangerously with water [1]
339	highly flammable liquid which can spontaneously lead to violent reaction
36	flammable liquid (flash-point between 23 °C and 61 °C, inclusive), slightly toxic, or self-heating liquid, toxic
362	flammable liquid, toxic, which reacts with water, emitting flammable gases
X362	flammable liquid toxic, which reacts dangerously with water, emitting flammable gases [1]
368	flammable liquid, toxic, corrosive
38	flammable liquid (flash-point between 23 °C and 61 °C, inclusive), slightly corrosive or self-heating liquid, corrosive
382	flammable liquid, corrosive, which reacts with water, emitting flammable gases
X382	flammable liquid, corrosive, which reacts dangerously with water, emitting flammable gases [1]
39	flammable liquid, which can spontaneously lead to violent reaction
40	flammable solid, or self-reactive substance, or self-heating substance
423	solid which reacts with water, emitting flammable gases
X423	flammable solid which reacts dangerously with water, emitting flammable gases [1]
43	spontaneously flammable (pyrophoric) solid
44	flammable solid, in the molten state at an elevated temperature

[1] W*ater not to be used except by approval of experts.*

446	flammable solid, toxic, in the molten state, at an elevated temperature
46	flammable or self-heating solid, toxic
462	toxic solid which reacts with water, emitting flammable gases
X462	solid which reacts dangerously with water, emitting toxic gases [1]
48	flammable or self-heating solid, corrosive
482	corrosive solid which reacts with water, emitting flammable gases
X482	solid which reacts dangerously with water, emitting corrosive gases [1]
50	oxidizing (fire-intensifying) substance
539	flammable organic peroxide
55	strongly oxidizing (fire-intensifying) substance
556	strongly oxidizing (fire-intensifying) substance, toxic
558	strongly oxidizing (fire-intensifying) substance, corrosive
559	strongly oxidizing (fire-intensifying) substance, which can spontaneously lead to violent reaction
56	oxidizing substance (fire-intensifying), toxic
568	oxidizing substance (fire-intensifying), toxic, corrosive
58	oxidizing substance (fire-intensifying), corrosive
59	oxidizing substance (fire-intensifying) which can spontaneously lead to violent reaction
60	toxic or slightly toxic substance
606	infectious substance
623	toxic liquid, which reacts with water, emitting flammable gases
63	toxic substance, flammable (flash-point between 23 °C and 61 °C, inclusive)
638	toxic substance, flammable (flash-point between 23 °C and 61 °C, inclusive), corrosive
639	toxic substance, flammable (flash-point not above 61 °C) which can spontaneously lead to violent reaction
64	toxic solid, flammable or self-heating
642	toxic solid, which reacts with water, emitting flammable gases
65	toxic substance, oxidizing (fire-intensifying)
66	highly toxic substance
663	highly toxic substance, flammable (flash-point not above 61 °C)
664	highly toxic solid, flammable or self-heating
665	highly toxic substance, oxidizing (fire-intensifying)
668	highly toxic substance, corrosive
669	highly toxic substance which can spontaneously lead to violent reaction
68	toxic substance, corrosive
69	toxic or slightly toxic substance, which can spontaneously lead to violent reaction
70	radioactive material
78	radioactive material, corrosive
80	corrosive or slightly corrosive substance
X80	corrosive or slightly corrosive substance, which reacts dangerously with water [1]
823	corrosive liquid which reacts with water, emitting flammable gases
83	corrosive or slightly corrosive substance, flammable (flash-point between 23 °C and 61 °C, inclusive)
X83	corrosive or slightly corrosive substance, flammable, (flash-point between 23 °C and 61 °C, inclusive), which reacts dangerously with water [1]
839	corrosive or slightly corrosive substance, flammable (flash-point between 23 °C and 61 °C inclusive) which can spontaneously lead to violent reaction

[1] W*ater not to be used except by approval of experts.*

X839	corrosive or slightly corrosive substance, flammable (flash-point between 23 °C and 61 °C inclusive), which can spontaneously lead to violent reaction and which reacts dangerously with water [1]
84	corrosive solid, flammable or self-heating
842	corrosive solid which reacts with water, emitting flammable gases
85	corrosive or slightly corrosive substance, oxidizing (fire-intensifying)
856	corrosive or slightly corrosive substance, oxidizing (fire-intensifying) and toxic
86	corrosive or slightly corrosive substance, toxic
88	highly corrosive substance
X88	highly corrosive substance, which reacts dangerously with water [1]
883	highly corrosive substance, flammable (flash-point between 23 °C and 61 °C inclusive)
884	highly corrosive solid, flammable or self-heating
885	highly corrosive substance, oxidizing (fire-intensifying)
886	highly corrosive substance, toxic
X886	highly corrosive substance, toxic, which reacts dangerously with water [1]
89	corrosive or slightly corrosive substance, which can spontaneously lead to violent reaction
90	environmentally hazardous substance; miscellaneous dangerous substances
99	miscellaneous dangerous substance carried at an elevated temperature.

5.3.3 Mark for elevated temperature substances

Tank-vehicles, tank-containers, portable tanks, special vehicles or containers or especially equipped vehicles or containers for which a mark for elevated temperature substances is required according to special provision 580 in Column (6) of Table A of Chapter 3.2 shall bear on both sides and at the rear for vehicles, and on both sides and at each end for containers, tank-containers and portable tanks, a triangular shaped mark with sides of at least 250 mm, to be shown in red, as reproduced below.

[1] *Water not to be used except by approval of experts.*

CHAPTER 5.4

DOCUMENTATION

5.4.0 Any carriage of goods governed by ADR shall be accompanied by the documentation prescribed in this Chapter, as appropriate, unless exempted under 1.1.3.1 to 1.1.3.5.

***NOTE 1**: For the list of documentation to be carried on board transport units, see 8.1.2.*

***NOTE 2:** The use of electronic data processing (EDP) or electronic data interchange (EDI) techniques as an aid to or instead of paper documentation is permitted, provided that the procedures used for the capture, storage and processing of electronics data meet the legal requirements as regards the evidential value and availability of data during transport in a manner at least equivalent to that of paper documentation.*

5.4.1 Dangerous goods transport document and related information

5.4.1.1 *General information required in the transport document*

5.4.1.1.1 The transport document(s) shall contain the following information for each dangerous substance, material or article offered for carriage:

(a) the UN number preceded by the letters "UN";

(b) the proper shipping name supplemented, when applicable (see 3.1.2.8.1) with the technical name (see 3.1.2.8.1.1), as determined in accordance with 3.1.2;

(c) - for substances and articles of Class 1: the classification code given in Column (3 b) of Table A in Chapter 3.2.

When, in Column (5) of Table A of Chapter 3.2, label model numbers other than 1, 1.4, 1.5 and 1.6 are given, these label model numbers, in brackets, shall follow the classification code;

- for radioactive material of Class 7: the Class number: "7";

- for substances and articles of other classes: the label model numbers given in Column (5) of Table A in Chapter 3.2. When more than one label model numbers are given, the numbers following the first one shall be given in brackets. For substances and articles for which no label model is given in Column (5) of Table A in Chapter 3.2, their class according to Column (3a) shall be given instead;

(d) where assigned, the packing group for the substance which may be preceded by the letters "PG" (e.g. "PG II"), or the initials corresponding to the words "Packing Group" in the languages used according to 5.4.1.4.1;

***NOTE:** For radioactive material of Class 7 with subsidiary risks, see special provision 172 (b) in Chapter 3.3.*

(e) the number and a description of the packages;

(f) with the exception of empty means of containment, uncleaned, the total quantity of each item of dangerous goods bearing a different UN number, proper shipping name or, when applicable, packing group (as a volume or as a gross mass, or as a net mass as appropriate);

***NOTE**: In the case of intended application of 1.1.3.6, the total quantity of dangerous goods for each transport category shall be indicated in the transport document in accordance with 1.1.3.6.3.*

(g) the name and address of the consignor;

(h) the name and address of the consignee(s);

(i) a declaration as required by the terms of any special agreement.

The location and order in which the elements of information required appear in the transport document is left optional, except that (a), (b), (c) and (d) shall be shown either in sequence (a), (b), (c), (d) or in sequence (b), (c), (a), (d) with no information interspersed, except as provided in ADR.

Examples of such permitted dangerous goods descriptions are:

"UN 1098 ALLYL ALCOHOL, 6.1 (3), I" or
"ALLYL ALCOHOL, 6.1 (3), UN 1098, I"

5.4.1.1.2 The information required on a transport document shall be legible.

Although upper case is used in Chapter 3.1 and in Table A in Chapter 3.2 to indicate the elements which shall be part of the proper shipping name, and although upper and lower case are used in this Chapter to indicate the information required in the transport document, the use of upper or of lower case for entering the information in the transport document is left optional.

5.4.1.1.3 *Special provisions for wastes*

If waste containing dangerous goods (other than radioactive wastes) is being carried, the UN number and the proper shipping name shall be preceded by the word "**WASTE**", unless this term is part of the proper shipping name, e.g.:

"WASTE, UN 1230 METHANOL, 3 (6.1), II ", or
"WASTE, METHANOL, 3 (6.1), UN 1230, II", or
"WASTE, UN 1993 FLAMMABLE LIQUID, N.O.S. (toluene and ethyl alcohol), 3, II", or
"WASTE, FLAMMABLE LIQUID, N.O.S. (toluene and ethyl alcohol), 3, UN 1993, II"

5.4.1.1.4 *Special provisions for dangerous goods packed in limited quantities*

No information is required in the transport document, if any, for carriage of dangerous goods packed in limited quantities according to Chapter 3.4.

5.4.1.1.5 *Special provisions for salvage packagings*

When dangerous goods are carried in a salvage packaging, the words "**SALVAGE PACKAGE**" shall be added after the description of the goods in the transport document.

5.4.1.1.6 *Special provision for empty means of containment*

5.4.1.1.6.1 For empty packagings, uncleaned, which contain the residue of dangerous goods of classes other than Class 7 including empty uncleaned receptacles for gases with a capacity of not more than 1000 litres, the description in the transport document shall be "EMPTY PACKAGING", "EMPTY RECEPTACLE", "EMPTY IBC", "EMPTY LARGE PACKAGING", as appropriate, followed by the information of the goods last loaded, as described in 5.4.1.1.1 (c).

See example as follows: "EMPTY PACKAGING, 6.1 (3)".

5.4.1.1.6.2 For empty means of containment other than packagings, uncleaned, which contain the residue of dangerous goods of classes other than Class 7 and for empty uncleaned receptacles for gases with a capacity of more than 1000 litres, the description in the transport document shall be "EMPTY TANK VEHICLE", "EMPTY DEMOUNTABLE TANK", "EMPTY TANK CONTAINER", "EMPTY PORTABLE TANK", "EMPTY BATTERY-VEHICLE", "EMPTY MEGC", "EMPTY VEHICLE", "EMPTY CONTAINER", "EMPTY RECEPTACLE" followed by the words "last load" together with the information of the goods last loaded, as prescribed in 5.4.1.1.1 (a) to (d) in one of the sequences as prescribed.

See example as follows:

"EMPTY TANK-VEHICLE, LAST LOAD: UN 1098 ALLYLALCOHOL, 6.1(3), I" or "EMPTY TANK-VEHICLE, LAST LOAD: ALLYLALCOHOL, 6.1(3), UN 1098, I"

5.4.1.1.6.3 If empty tanks, battery-vehicles and MEGCs, uncleaned, are carried to the nearest place where cleaning or repair can be carried out in accordance with the provisions of 4.3.2.4.3 or 7.5.8.1, the following additional entry shall be made in the transport document: "**Carriage in accordance with 4.3.2.4.3**" or "**Carriage in accordance with 7.5.8.1**".

5.4.1.1.7 *Special provisions for carriage in a transport chain including maritime or air carriage*

For carriage in accordance with 1.1.4.2.1, a statement shall be included in the transport document, as follows: "**Carriage in accordance with 1.1.4.2.1**".

5.4.1.1.8 *(Reserved)*

5.4.1.1.9 *(Reserved)*

5.4.1.1.10 *Special provisions for exemptions related to quantities carried per transport unit*

5.4.1.1.10.1 In the case of exemptions provided for in 1.1.3.6, the transport document shall bear the following inscription: "**Load not exceeding the exemption limits prescribed in 1.1.3.6**".

5.4.1.1.10.2 Where consignments from more than one consignor are carried in the same transport unit, the transport documents accompanying these consignments need not bear the inscription mentioned in 5.4.1.1.10.1.

5.4.1.1.11 *Special provisions for the carriage of IBCs after the date of expiry of the last periodic test inspection*

For carriage in accordance with 4.1.2.2, a statement to this effect shall be included in the transport document, as follows: "**Carriage in accordance with 4.1.2.2**".

5.4.1.1.12 *(Reserved)*

5.4.1.1.13 *Special provisions for carriage in multi-compartment tank-vehicles or transport units with more than one tank*

When by derogation from 5.3.2.1.2 a multi-compartment tank-vehicle or a transport unit with more than one tank is marked in accordance with 5.3.2.1.3, the substances contained in each tank or in each compartment of a tank shall be specified in the transport document.

5.4.1.1.14 *Special provisions for the carriage of substances carried under elevated temperature*

If the proper shipping name of a substance which is carried or offered for carriage in a liquid state at a temperature equal to or exceeding 100 °C, or in a solid state at a temperature equal to or exceeding 240 °C, does not convey the elevated temperature condition (for example, by using the term "MOLTEN" or "ELEVATED TEMPERATURE" as part of the proper shipping name), the word "**HOT**" shall immediately precede the proper shipping name.

5.4.1.1.15 *Special provisions for the carriage of substances stabilized by temperature control*

If the word "STABILIZED" is part of the proper shipping name (see also 3.1.2.6), when stabilization is by means of temperature control, the control and emergency temperatures (see 2.2.41.1.17) shall be indicated in the transport document, as follows:

"**Control temperature: ....°C Emergency temperature**: **.... °C**"

5.4.1.1.16 *Information required in accordance with special provision 640 in Chapter 3.3*

Where it is required by special provision 640 of Chapter 3.3, the transport document shall bear the inscription "**Special provision 640X**" where "X" is the capital letter appearing after the pertinent reference to special provision 640 in column (6) of Table A of Chapter 3.2.

5.4.1.1.17 *Special provisions for the carriage of solids in bulk containers conforming to 6.11.4*

When solid substances are carried in bulk containers conforming to 6.11.4, the following statement shall be shown on the transport document (see NOTE at the beginning of 6.11.4):

"**Bulk container BK(x) approved by the competent authority of…**"

5.4.1.2 ***Additional or special information required for certain classes***

5.4.1.2.1 *Special provisions for Class 1*

(a) The transport document shall indicate, in addition to the requirements in 5.4.1.1.1 (f):

- the total net mass, in kg, of explosive contents [1] for each substance or article bearing a different UN number;
- the total net mass, in kg, of explosive contents [1] for all substances and articles covered by the transport document;

(b) For mixed packing of two different goods, the description of the goods in the transport document shall include the UN numbers and names printed in capitals in Columns (1) and (2) of Table A of Chapter 3.2 of both substances or articles. If more than two different goods are contained in the same package in conformity with the mixed packing provisions given in 4.1.10 special provisions MP1, MP2 and MP20 to MP24, the transport document shall indicate under the description of the goods the UN numbers of all the substances and articles contained in the package, in the form, "**Goods of UN Nos...**";

[1] *For articles, "explosive contents" means the explosive substance contained in the article.*

(c) For the carriage of substances and articles assigned to an n.o.s. entry or the entry "0190 SAMPLES, EXPLOSIVE" or packed conforming to packing instruction P101 of 4.1.4.1, a copy of the competent authority approval with the conditions of carriage shall be attached to the transport document. It shall be in an official language of the forwarding country and also, if that language is not English, French or German, in English, French or German unless agreements, if any, concluded between the countries concerned in the transport operation provide otherwise;

(d) If packages containing substances and articles of compatibility groups B and D are loaded together in the same vehicle in accordance with the requirements of 7.5.2.2, the approval certificate of the protective compartment or containment system in accordance with 7.5.2.2, note [a] under the table, shall be attached to the transport document;

(e) When explosive substances or articles are carried in packagings conforming to packing instruction P101, the transport document shall bear the inscription "**Packaging approved by the competent authority of ...**" (see 4.1.4.1, packing instruction P101);

(f) *(Reserved)*

(g) When fireworks of UN Nos. 0333, 0334, 0335, 0336 and 0337 are carried, the transport document shall bear the inscription: "**Classification recognized by the competent authority of ...**" (State referred to in special provision 645 of 3.3.1).

NOTE: *The commercial or technical name of the goods may be entered additionally to the proper shipping name in the transport document.*

5.4.1.2.2 *Additional provisions for Class 2*

(a) For the carriage of mixtures (see 2.2.2.1.1) in tanks (demountable tanks, fixed tanks, portable tanks, tank-containers or elements of battery-vehicles or of MEGCs), the composition of the mixture as a percentage of the volume or as a percentage of the mass shall be given. Constituents below 1% need not be indicated (see also 3.1.2.8.1.2);

(b) For the carriage of cylinders, tubes, pressure drums, cryogenic receptacles and bundles of cylinders under the conditions of 4.1.6.10, the following entry shall be included in the transport document: "**Carriage in accordance with 4.1.6.10**".

5.4.1.2.3 *Additional provisions for self-reactive substances of Class 4.1 and organic peroxides of Class 5.2*

5.4.1.2.3.1 For self-reactive substances of Class 4.1 and for organic peroxides of Class 5.2 that require temperature control during carriage (for self-reactive substances see 2.2.41.1.17; for organic peroxides, see 2.2.52.1.15 to 2.2.52.1.17), the control and emergency temperatures shall be indicated in the transport document, as follows:
"**Control temperature: ... °C Emergency temperature: ... °C**".

5.4.1.2.3.2 When for certain self-reactive substances of Class 4.1 and certain organic peroxides of Class 5.2 the competent authority has permitted the label conforming to model No.1 to be dispensed with for a specific packaging (see 5.2.2.1.9), a statement to this effect shall be included in the transport document, as follows:
"**The label conforming to model No. 1 is not required**".

5.4.1.2.3.3 When organic peroxides and self-reactive substances are carried under conditions where approval is required (for organic peroxides see 2.2.52.1.8, 4.1.7.2.2 and special provision TA2 of 6.8.4; for self-reactive substances see 2.2.41.1.13 and 4.1.7.2.2, a statement to his effect shall be included in the transport document, e.g. "**Carriage in accordance with 2.2.52.1.8**".

A copy of the approval of the competent authority with the conditions of carriage shall be attached to the transport document.

5.4.1.2.3.4 When a sample of an organic peroxide (see 2.2.52.1.9) or a self-reactive substance (see 2.2.41.1.15) is carried, a statement to this effect shall be included in the transport document, e.g. "**Carriage in accordance with 2.2.52.1.9**".

5.4.1.2.3.5 When self-reactive substances type G (see Manual of Tests and Criteria, Part II, paragraph 20.4.2 (g)) are carried, the following statement may be given in the transport document: "**Not a self-reactive substance of Class 4.1**".

When organic peroxides type G (see Manual of Tests and Criteria, Part II, paragraph 20.4.3 (g)) are carried, the following statement may be given in the transport document: "**Not a substance of Class 5.2**".

5.4.1.2.4 *Additional provisions for Class 6.2*

In addition to the information concerning the consignee (see 5.4.1.1.1 (h)), the name and telephone number of a responsible person shall be indicated.

5.4.1.2.5 *Additional provisions for Class 7*

5.4.1.2.5.1 The following information shall be inserted in the transport document for each consignment of Class 7 material, as applicable, in the order given and immediately after the information required under 5.4.1.1.1 (a) to (c):

(a) The name or symbol of each radionuclide or, for mixtures of radionuclides, an appropriate general description or a list of the most restrictive nuclides;

(b) A description of the physical and chemical form of the material, or a notation that the material is special form radioactive material or low dispersible radioactive material. A generic chemical description is acceptable for chemical form. For radioactive material with a subsidiary risk, see last sentence of special provision 172 of Chapter 3.3;

(c) The maximum activity of the radioactive contents during carriage expressed in becquerels (Bq) with an appropriate SI prefix (see 1.2.2.1). For fissile material, the mass of fissile material in grams (g), or appropriate multiples thereof, may be used in place of activity;

(d) The category of the package, i.e. I-WHITE, II-YELLOW, III-YELLOW;

(e) The transport index (categories II-YELLOW and III-YELLOW only);

(f) For consignments including fissile material other than consignments excepted under 6.4.11.2, the criticality safety index;

(g) The identification mark for each competent authority approval certificate (special form radioactive material, low dispersible radioactive material, special arrangement, package design, or shipment) applicable to the consignment;

(h) For consignments of more than one package, the information required in 5.4.1.1.1 and in (a) to (g) above shall be given for each package. For packages in an overpack, container, or vehicle, a detailed statement of the contents of each package within the overpack, container, or vehicle and, where appropriate, of each overpack, container, or vehicle shall be included. If packages are to be removed from the overpack, container, or vehicle at a point of intermediate unloading, appropriate transport documents shall be made available;

(i) Where a consignment is required to be shipped under exclusive use, the statement "**EXCLUSIVE USE SHIPMENT**"; and

(j) For LSA-II and LSA-III substances, SCO-I and SCO-II, the total activity of the consignment as a multiple of A_2.

5.4.1.2.5.2 The consignor shall provide in the transport documents a statement regarding actions, if any, that are required to be taken by the carrier. The statement shall be in the languages deemed necessary by the carrier or the authorities concerned, and shall include at least the following information:

(a) Supplementary requirements for loading, stowage, carriage, handling and unloading of the package, overpack or container including any special stowage provisions for the safe dissipation of heat (see special provision CV33 (3.2) of 7.5.11), or a statement that no such requirements are necessary;

(b) Restrictions on the mode of carriage or vehicle and any necessary routeing instructions;

(c) Emergency arrangements appropriate to the consignment.

5.4.1.2.5.3 The applicable competent authority certificates need not necessarily accompany the consignment. The consignor shall make them available to the carrier(s) before loading and unloading.

5.4.1.3 ***(Reserved)***

5.4.1.4 ***Format and language***

5.4.1.4.1 The document containing the information in 5.4.1.1 and 5.4.1.2 may be that already required by other regulations in force for carriage by another mode of carriage. In case of multiple consignees, the name and address of the consignees and the quantities delivered enabling the nature and quantities carried to be evaluated at any time, may be entered in other documents which are to be used or in any other documents made mandatory according to other specific regulations and which shall be on board the vehicle.

The particulars to be entered in the document shall be drafted in an official language of the forwarding country, and also, if that language is not English, French, or German, in English, French or German, unless international road carriage tariffs, if any, or agreements concluded between the countries concerned in the transport operation, provide otherwise.

5.4.1.4.2 If by reason of the size of the load, a consignment cannot be loaded in its entirety on a single transport unit, at least as many separate documents, or copies of the single document, shall be made out as transport units loaded. Furthermore, in all cases, separate transport documents shall be made out for consignments or parts of consignments which may not be loaded together on the same vehicle by reason of the prohibitions set forth in 7.5.2.

The information relative to the hazards of the goods to be carried (as indicated in 5.4.1.1) may be incorporated in, or combined with, an existing transport or cargo handling document. The layout of the information in the document (or the order of transmission of the corresponding data by electronic date processing (EDP) or electronic date interchange (EDI) techniques) shall be as provided in 5.4.1.1.1.

When an existing transport document or cargo handling document cannot be used for the purposes of dangerous goods documentation for multimodal transport, the use of documents corresponding to the example shown in 5.4.4 is considered advisable [2].

5.4.1.5 ***Non-dangerous goods***

When goods mentioned by name in Table A of Chapter 3.2, are not subject to ADR because they are considered as non-dangerous according to Part 2, the consignor may enter in the transport document a statement to that effect, e.g.: "**Not goods of Class ...**"

NOTE*: This provision may be used in particular when the consignor considers that, due to the chemical nature of the goods (e.g. solutions and mixtures) carried or to the fact that such goods are deemed dangerous for other regulatory purposes the consignment might be subject to control during the journey.*

5.4.2 **Container packing certificate**

If the carriage of dangerous goods in a large container precedes a voyage by sea, a container packing certificate conforming to section 5.4.2 of the IMDG Code[3] shall be provided with the transport document[4].

---

[2] *If used, the relevant recommendations of the UN/ECE Working Party on Facilitation of International Trade Procedures may be consulted, in particular Recommendation No.1 (United Nations Lay-out Key for Trade Documents) (ECE/TRADE/137, edition 96.1), Recommendation No.11 (Documentary Aspects of the International Transport of Dangerous Goods) ECE/TRADE/204,edition 96.1) and Recommendation No.22 (Lay-out Key for standard Consignment Instructions) (ECE/TRADE/168, edition 96.1). Refer to the Trade Data Elements Directory, Volume III, Trade Facilitation Recommendations (ECE/TRADE/200) (United Nations publication Sales No.E.96.II.E.13).*

[3] *Guidelines for use in practice and in training for loading goods in transport units have also been drawn up by the International Maritime Organization (IMO), the International Labour Organization (ILO) and the United Nations Economic Commission for Europe (UN/ECE) and have been published by IMO ("IMO/ILO/UN-ECE Guidelines for Packing of Cargo Transport Units (CTUs)").*

[4] *Section 5.4.2 of the IMDG Code requires the following:*

"5.4.2 Container/vehicle packing certificate

5.4.2.1 When dangerous goods are packed or loaded into any container or vehicle, those responsible for packing the container or vehicle shall provide a "container/vehicle packing certificate" specifying the container/vehicle identification number(s) and certifying that the operation has been carried out in accordance with the following conditions:

.1 The container/vehicle was clean, dry and apparently fit to receive the goods;

.2 Packages, which need to be segregated in accordance with applicable segregation requirements, have not been packed together onto or in the container/vehicle [unless approved by the competent authority concerned in accordance with 7.2.2.3 (of the IMDG Code)];

.3 All packages have been externally inspected for damage, and only sound packages have been loaded;

The functions of the transport document required under 5.4.1 and of the container packing certificate as provided above may be incorporated into a single document; if not, these documents shall be attached one to the other. If these functions are incorporated into a single document, the inclusion in the transport document of a statement that the loading of the container has been carried out in accordance with the applicable modal regulations together with the identification of the person responsible for the container packing certificate shall be sufficient.

NOTE: *The container packing certificate is not required for portable tanks, tank-containers and MEGCs.*

5.4.3 Instructions in writing

5.4.3.1 As a precaution against any accident or emergency that may occur or arise during carriage, the driver shall be given instructions in writing, specifying concisely for each dangerous substance or article carried or for each group of goods presenting the same dangers to which the substance(s) or article(s) carried belong(s):

(a) - the name of the substance or article or group of goods;
- the Class; and
- the UN number, or for a group of goods, the UN numbers;

(b) the nature of the danger inherent in these goods as well as the measures to be taken by the driver and the personal protection equipment to be used by the driver;

(c) the general actions to be taken, e.g. to warn the road users and passers-by and call the police/fire brigade;

.4 Drums have been stowed in an upright position, unless otherwise authorized by the competent authority, and all goods have been properly loaded, and, where necessary, adequately braced with securing material to suit the mode(s) of transport for the intended journey;

.5 Goods loaded in bulk have been evenly distributed within the container/vehicle;

.6 For consignments including goods of class 1, other than division 1.4, the container/vehicle is structurally serviceable in conformity with 7.4.6 (of the IMDG Code);

.7 The container/vehicle and packages are properly marked, labelled, and placarded, as appropriate;

.8 When solid carbon dioxide (CO2-dry ice) is used for cooling purposes, the container/vehicle is externally marked or labelled in a conspicuous place, such as, at the door end, with the words: "DANGEROUS CO2 GAS (DRY ICE) INSIDE. VENTILATE THOROUGHLY BEFORE ENTERING"; and

.9 A dangerous goods transport document, as indicated in 5.4.1 (of the IMDG Code) has been received for each dangerous goods consignment loaded in the container/vehicle.

NOTE*: The container/vehicle packing certificate is not required for tanks*

5.4.2.2 The information required in the dangerous goods transport document and the container/vehicle packing certificate may be incorporated into a single document; if not, these documents shall be attached one to the other. If the information is incorporated into a single document, the document shall include a signed declaration such as "It is declared that the packing of the goods into the container/vehicle has been carried out in accordance with the applicable provisions". This declaration shall be dated and the person signing this declaration shall be identified on the document.".

(d) the additional actions to be taken to deal with minor leakages or spillages to prevent their escalation, if this can be achieved without personal risk;

(e) the special actions to be taken for certain goods, if applicable;

(f) the necessary equipment for additional and/or special actions, if applicable.

5.4.3.2 These instructions shall be provided by the consignor and shall be handed out to the driver at the latest when the dangerous goods are loaded on the vehicle. Information on the content of the instructions shall be supplied to the carrier at the latest when the carriage order is given, so as to enable him to take the necessary steps to ensure that the employees concerned are aware of these instructions and are capable of carrying them out properly and to ensure that the necessary equipment is on board the vehicle.

5.4.3.3 The consignor shall be responsible for the content of these instructions. They shall be provided in a language the driver(s) taking over the dangerous goods is (are) able to read and to understand, and in all languages of the countries of origin, transit and destination. In the case of countries with more than one official language, the competent authority shall specify the official language or languages applicable throughout the territory or in each region or part of the territory.

5.4.3.4 These instructions shall be kept readily identifiable in the driver's cab.

5.4.3.5 Instructions in writing according to this section which are not applicable to the goods which are on board of the vehicle, shall be kept separate from pertinent documents in such a way as to prevent confusion.

5.4.3.6 The carrier shall ensure that the drivers concerned understand and are capable of carrying out these instructions properly.

5.4.3.7 In case of mixed loads of packaged goods including dangerous goods which belong to different groups of goods presenting the same dangers, the instructions in writing may be restricted to one instruction per Class of dangerous goods carried on board of the vehicle. In such case no name of goods, or UN number has to be mentioned in the instructions.

5.4.3.8 These instructions shall be drafted according to the following format:

LOAD

- Mention of the following details concerning the goods for which these instructions are intended or applicable:
  - the name of the substance or article, or group of goods presenting the same dangers;
  - the Class; and
  - the UN number or, for a group of goods, the UN numbers.
- Description shall be restricted to e.g. the physical state with indication of any colour and mention of any odour, to aid identification of leakages or spillages.

NATURE OF DANGER

Short enumeration of dangers:

- Main danger;
- Additional dangers including possible delayed effects and dangers for the environment;
- Behaviour under fire or heating (decomposition, explosion, development of toxic fumes, etc.);
- If applicable, it shall be mentioned here that the goods carried react dangerously with water.

PERSONAL PROTECTION

Mention of the personal protection intended for the driver in accordance with the requirements of 8.1.5 (b) and (c).

GENERAL ACTIONS TO BE TAKEN BY DRIVER

Mention of the following instructions:

- Stop the engine;
- No naked lights. No smoking;
- Mark roads and warn other road users or passers-by;
- Inform the public about the hazard and give advice to keep upwind;
- Notify police and fire brigade as soon as possible.

ADDITIONAL AND/OR SPECIAL ACTIONS TO BE TAKEN BY THE DRIVER

Appropriate instructions shall be included here as well as the list of equipment necessary for the driver to perform the additional and/or special actions according to the class(es) of the goods being carried (e.g. shovel, collecting container, etc.).

It is considered that drivers of vehicles should be instructed and trained to take additional actions with minor leakages or spillages to prevent their escalation, provided that this can be achieved without personal risk.

It is considered that any special action recommended by the consignor requires a special training of the driver. If applicable, appropriate instructions shall be included here as well as the list of equipment needed for these special actions.

FIRE

Information for the driver in case of fire:

Drivers should be instructed during training to deal with minor vehicle fires. They shall not attempt to deal with any fire involving the load.

FIRST AID

Information for the driver in case of contact with the carried good(s).

ADDITIONAL INFORMATION

* * * * *

5.4.4 Example of a multimodal dangerous goods form

Example of a form which may be used as a combined dangerous goods declaration and container packing certificate for multimodal carriage of dangerous goods.

MULTIMODAL DANGEROUS GOODS FORM

1. Shipper / Consignor /Sender	2. Transport document number	
	3. Page 1 of Pages	4. Shipper's reference
		5. Freight Forwarder's reference
6. Consignee	7. Carrier (to be completed by the carrier)	
	SHIPPER'S DECLARATION I hereby declare that the contents of this consignment are fully and accurately described below by the proper shipping name, and are classified, packaged, marked and labeled /placarded and are in all respects in proper condition for transport according to the applicable international and national governmental regulations.	

8. This shipment is within the limitations prescribed for: (Delete non-applicable) PASSENGER AND CARGO AIRCRAFT CARGO AIRCRAFT ONLY		9. Additional handling information
10. Vessel / flight no. and date	11. Port / place of loading	
12. Port / place of discharge	13. Destination	

14. Shipping marks	* Number and kind of packages; description of goods	Gross mass (kg)	Net mass	Cube (m^3)

15. Container identification No./ vehicle registration No.	16. Seal number (s)	17. Container/vehicle size & type	18. Tare (kg)	19. Total gross mass (including tare) (kg)

CONTAINER/VEHICLE PACKING CERTIFICATE I hereby declare that the goods described above have been packed/loaded into the container/vehicle identified above in accordance with the applicable provisions ** **MUST BE COMPLETED AND SIGNED FOR ALL CONTAINER/VEHICLE LOADS BY PERSON RESPONSIBLE FOR PACKING/LOADING**	21.RECEIVING ORGANISATION RECEIPT Received the above number of packages/containers/trailers in apparent good order and condition unless stated hereon: RECEIVING ORGANISATION REMARKS:	
20. Name of company	Haulier's name	22. Name of company (OF SHIPPER PREPARING THIS NOTE)
Name / Status of declarant	Vehicle reg. no.	Name / Status of declarant
Place and date	Signature and date	Place and date
Signature of declarant	DRIVER'S SIGNATURE	Signature of declarant

** *See 5.4.2.*

* FOR DANGEROUS GOODS: you must specify: proper shipping name, hazard class, UN no., packing group (where assigned) and any other element of information required under applicable national and international regulations

BLACK HATCHINGS BLACK HATCHINGS BLACK HATCHINGS BLACK HATCHINGS BLACK HATCHINGS BLACK HATCHINGS BLACK HATCHINGS BLACK HATCHINGS BLACK HATCHINGS BLACK HATCHINGS BLACK HATCHINGS BLACK HATCHINGS BLACK HATCHINGS BLACK HATCHINGS BLACK HATCHINGS BLACK

MULTIMODAL DANGEROUS GOODS FORM

Continuation Sheet

1. Shipper / Consignor /Sender	2. Transport document number	
	3. Page 1 of Pages	4. Shipper's reference
		5. Freight Forwarder's reference

14. Shipping marks	* Number and kind of packages; description of goods	Gross mass (kg)	Net mass	Cube (m^3)

* FOR DANGEROUS GOODS: you must specify: proper shipping name, hazard class, UN no., packing group (where assigned) and any other element of information required under applicable national and international regulations

BLACK HATCHINGS BLACK HATCHINGS BLACK HATCHINGS BLACK HATCHINGS BLACK HATCHINGS BLACK HATCHINGS BLACK HATCHINGS BLACK HATCHINGS BLACK HATCHINGS BLACK HATCHINGS BLACK HATCHINGS BLACK HATCHINGS BLACK HATCHINGS BLACK HATCHINGS BLACK

-

CHAPTER 5.5

SPECIAL PROVISIONS

5.5.1 Special provisions for the consignment of infectious substances

5.5.1.1 Unless an infectious substance cannot be consigned by any other means, live vertebrate or invertebrate animals shall not be used to consign such a substance. Such animals shall be packed, marked, indicated, and carried in accordance with the relevant regulations governing the carriage of animals [1].

5.5.1.2 *(Reserved)*

5.5.1.3 Dead animals which are known or reasonably believed to contain an infectious substance shall be packed, marked, labelled and carried in accordance with the conditions [2] specified by the competent authority of the country of origin [3].

5.5.2 Special provisions for fumigated vehicles, containers and tanks

5.5.2.1 For the carriage of UN No. 3359 fumigated unit (vehicle, container or tank) the transport document shall show the information required in 5.4.1.1.1, the date of fumigation and the type and amount of the fumigant used. These particulars shall be drafted in an official language of the forwarding country and also, if the language is not English, French or German, in English, French or German, unless agreements, if any, concluded between the countries concerned in the transport operation provide otherwise. In addition, instructions for disposal of any residual fumigant including fumigation devices (if used) shall be provided.

5.5.2.2 A warning sign as specified in 5.5.2.3 shall be placed on each fumigated vehicle, container or tank in a location where it will be easily seen by persons attempting to enter the interior of vehicle, container or tank. The particulars concerning the warning sign shall be drafted in a language considered appropriate by the consignor.

5.5.2.3 The fumigation warning sign shall be rectangular and shall not be less than 300 mm wide and not less than 250 mm high. The markings shall be black print on a white background with lettering not less than 25 mm high. An illustration of this sign is given in the figure below.

---

[1] *Regulations governing the carriage of live animals are contained in, e.g. Directive 91/628/EEC of 19 November 1991 on the protection of animals during transport (Official Journal of the European Communities No. L 340 of 11.12.1991, p.17) and in the Recommendations of the Council of Europe (Ministerial Committee) on the carriage of certain animal species.*

[2] *Such regulations are contained e.g. in the Council of the European Communities Directive 90/667/EEC of 27.11.1990, laying down the veterinary rules for the disposal and processing of animal waste, for its placing on the market and for the prevention of pathogens in feedstuffs of animal or fish origin and amending Directive 90/425/EEC (Official Journal of the European Communities, No. L 363 of 27.12.1990 p. 0051-0060).*

[3] *If the country of origin is not a contracting party to ADR, the competent authority of the first country contracting party to ADR reached by the consignment.*

Fumigation warning sign

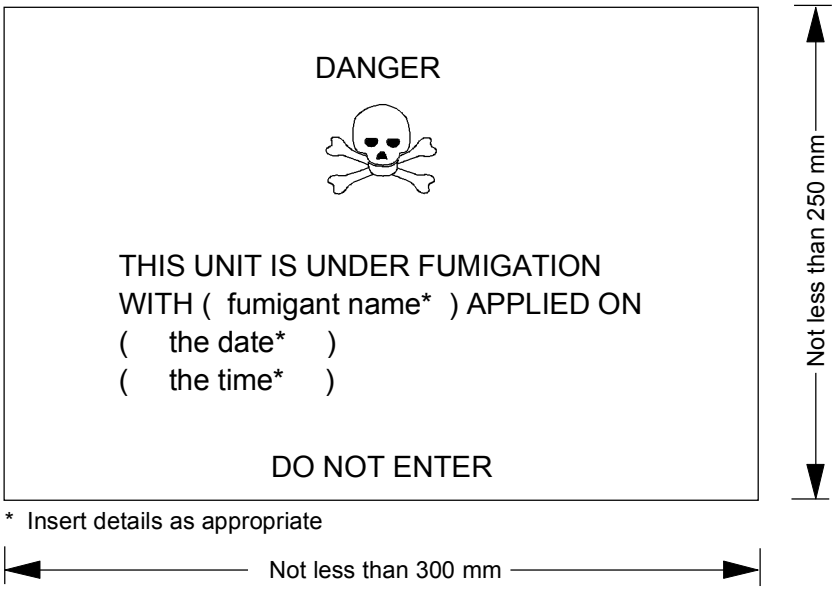

* Insert details as appropriate

PART 6

Requirements for the construction and testing of packagings, intermediate bulk containers (IBCs), large packagings, tanks and bulk containers

CHAPTER 6.1

REQUIREMENTS FOR THE CONSTRUCTION AND TESTING OF PACKAGINGS

6.1.1 General

6.1.1.1 The requirements of this Chapter do not apply to:

(a) Packages containing radioactive material of Class 7, unless otherwise provided (see 4.1.9);

(b) Packages containing infectious substances of Class 6.2, unless otherwise provided (see Chapter 6.3, Note and packing instruction P621 of 4.1.4.1);

(c) Pressure receptacles containing gases of Class 2;

(d) Packages whose net mass exceeds 400 kg;

(e) Packagings with a capacity exceeding 450 litres.

6.1.1.2 The requirements for packagings in 6.1.4 are based on packagings currently used. In order to take into account progress in science and technology, there is no objection to the use of packagings having specifications different from those in 6.1.4, provided that they are equally effective, acceptable to the competent authority and able successfully to withstand the tests described in 6.1.1.3 and 6.1.5. Methods of testing other than those described in this Chapter are acceptable, provided they are equivalent, and are recognized by the competent authority.

6.1.1.3 Every packaging intended to contain liquids shall successfully undergo a suitable leakproofness test, and be capable of meeting the appropriate test level indicated in 6.1.5.4.3:

(a) before it is first used for carriage;

(b) after remanufacturing or reconditioning, before it is re-used for carriage;

For this test, packagings need not have their own closures fitted.

The inner receptacle of composite packagings may be tested without the outer packaging provided the test results are not affected.

This test is not necessary for:

- inner packagings of combination packagings;
- inner receptacles of composite packagings (glass, porcelain or stoneware), marked with the symbol "RID/ADR" according to 6.1.3.1 (a) (ii);
- light gauge metal packagings, marked with the symbol "RID/ADR" according to 6.1.3.1 (a) (ii).

6.1.1.4 Packagings shall be manufactured, reconditioned and tested under a quality assurance programme which satisfies the competent authority in order to ensure that each packaging meets the requirements of this Chapter.

6.1.1.5 Manufacturers and subsequent distributors of packagings shall provide information regarding procedures to be followed and a description of the types and dimensions of closures (including required gaskets) and any other components needed to ensure that packages as presented for carriage are capable of passing the applicable performance tests of this Chapter.

6.1.2 Code for designating types of packagings

6.1.2.1 The code consists of:

(a) an Arabic numeral indicating the kind of packaging, e.g. drum, jerrican, etc., followed by;

(b) a capital letter(s) in Latin characters indicating the nature of the material, e.g. steel, wood, etc., followed where necessary by;

(c) an Arabic numeral indicating the category of packaging within the kind to which the packaging belongs.

6.1.2.2 In the case of composite packagings, two capital letters in Latin characters are used in sequence in the second position of the code. The first indicates the material of the inner receptacle and the second that of the outer packaging.

6.1.2.3 In the case of combination packagings only the code number for the outer packaging is used.

6.1.2.4 The letters "T", "V" or "W" may follow the packaging code. The letter "T" signifies a salvage packaging conforming to the requirements of 6.1.5.1.11. The letter "V" signifies a special packaging conforming to the requirements of 6.1.5.1.7. The letter "W" signifies that the packaging, although of the same type indicated by the code, is manufactured to a specification different to that in 6.1.4 and is considered equivalent under the requirements of 6.1.1.2.

6.1.2.5 The following numerals shall be used for the kinds of packaging:

l. Drum
2. Wooden barrel
3. Jerrican
4. Box
5. Bag
6. Composite packaging
7. (reserved)
0. Light gauge metal packagings

6.1.2.6 The following capital letters shall be used for the types of material:

A. Steel (all types and surface treatments)
B. Aluminium
C. Natural wood
D. Plywood
F. Reconstituted wood
G. Fibreboard
H. Plastics material
L. Textile
M. Paper, multiwall
N. Metal (other than steel or aluminium)
P. Glass, porcelain or stoneware

6.1.2.7 The following table indicates the codes to be used for designating types of packagings depending on the kind of packagings, the material used for their construction and their category; it also refers to the sub-sections to be consulted for the appropriate requirements:

Kind	Material	Category	Code	Sub-section
1. Drums	A. Steel	non-removable head	1A1	6.1.4.1
		removable head	1A2	
	B. Aluminium	non-removable head	1B1	6.1.4.2
		removable head	1B2	
	D. Plywood		1D	6.1.4.5
	G. Fibre		1G	6.1.4.7
	H. Plastics	non-removable head	1H1	6.1.4.8
		removable head	1H2	
	N. Metal, other than steel or aluminium	non-removable head	1N1	6.1.4.3
		removable head	1N2	
2. Barrels	C. Wooden	bung type	2C1	6.1.4.6
		removable head	2C2	
3. Jerricans	A. Steel	non-removable head	3A1	6.1.4.4
		removable head	3A2	
	B. Aluminium	non-removable head	3B1	6.1.4.4
		removable head	3B2	
	H. Plastics	non-removable head	3H1	6.1.4.8
		removable head	3H2	
4. Boxes	A. Steel		4A	6.1.4.14
	B. Aluminium		4B	6.1.4.14
	C. Natural wood	ordinary	4C1	6.1.4.9
		with sift-proof walls	4C2	
	D. Plywood		4D	6.1.4.10
	F. Reconstituted wood		4F	6.1.4.11
	G. Fibreboard		4G	6.1.4.12
	H. Plastics	expanded	4H1	6.1.4.13
		solid	4H2	
5. Bags	H. Woven plastics	without inner liner or coating	5H1	6.1.4.16
		sift-proof	5H2	
		water resistant	5H3	
	H. Plastics film		5H4	6.1.4.17
	L. Textile	without inner liner or coating	5L1	6.1.4.15
		sift-proof	5L2	
		water resistant	5L3	
	M. Paper	multiwall	5M1	6.1.4.18
		multiwall, water resistant	5M2	

Kind	Material	Category	Code	Sub-section
6. Composite packagings	H. Plastics receptacle	with outer steel drum	6HA1	6.1.4.19
		with outer steel crate or box	6HA2	
		with outer aluminium drum	6HB1	
		with outer aluminium crate or box	6HB2	
		with outer wooden box	6HC	
		with outer plywood drum	6HD1	
		with outer plywood box	6HD2	
		with outer fibre drum	6HG1	
		with outer fibreboard box	6HG2	
		with outer plastics drum	6HH1	
		with outer solid plastics box	6HH2	
	P. Glass, porcelain or stoneware receptacle	with outer steel drum	6PA1	6.1.4.20
		with outer steel crate or box	6PA2	
		with outer aluminium drum	6PB1	
		with outer aluminium crate or box	6PB2	
		with outer wooden box	6PC	
		with outer plywood drum	6PD1	
		with outer wickerwork hamper	6PD2	
		with outer fibre drum	6PG1	
		with outer fibreboard box	6PG2	
		with outer expanded plastics packaging	6PH1	
		with outer solid plastics packaging	6PH2	
0. Light gauge metal packagings	A. Steel	non-removable head	0A1	6.1.4.22
		removable head	0A2	

6.1.3 Marking

NOTE 1: *The marking indicates that the packaging which bears it corresponds to a successfully tested design type and that it complies with the requirements of this Chapter which are related to the manufacture, but not to the use, of the packaging. In itself, therefore, the mark does not necessarily confirm that the packaging may be used for any substance: generally the type of packaging (e.g. steel drum), its maximum capacity and/or mass, and any special requirements are specified for each substance in Table A of Chapter 3.2.*

NOTE 2: *The marking is intended to be of assistance to packaging manufacturers, reconditioners, packaging users, carriers and regulatory authorities. In relation to the use of a new packaging, the original marking is a means for its manufacturer(s) to identify the type and to indicate those performance test regulations that have been met.*

NOTE 3: *The marking does not always provide full details of the test levels, etc., and these may need to be taken further into account, e.g. by reference to a test certificate, to test reports or to a register of successfully tested packagings. For example, a packaging having an X or Y marking may be used for substances to which a packing group having a lesser degree of danger has been assigned with the relevant maximum permissible value of the relative density* [1] *determined by taking into account the factor 1.5 or 2.25 indicated in the packaging test requirements in 6.1.5 as appropriate, i.e. packing group I packaging tested for products of relative density 1.2 could be used as a packing group II packaging for products of relative density 1.8 or a packing group III packaging for products of relative density 2.7, provided of course that all the performance criteria can still be met with the higher relative density product.*

6.1.3.1 Each packaging intended for use according to the ADR shall bear markings which are durable, legible and placed in a location and of such a size relative to the packaging as to be readily visible. For packages with a gross mass of more than 30 kg, the markings or a duplicate thereof shall appear on the top or on a side of the packaging. Letters, numerals and symbols shall be at least 12 mm high, except for packagings of 30 litres or 30 kg capacity or less, when they shall be at least 6 mm in height and for packagings of 5 litres or 5 kg or less when they shall be of an appropriate size.

The marking shall show:

(a) (i) The United Nations packaging symbol

This shall not be used for any purpose other than certifying that a packaging complies with the relevant requirements in this Chapter. For embossed metal packagings the capital letters "UN" may be applied instead of the symbol; or

(ii) The symbol "RID/ADR" for packagings approved for rail transport as well as road transport.

For composite packagings (glass, porcelain or stoneware) and light gauge metal packagings, conforming to simplified conditions (see 6.1.1.3, 6.1.5.3.1 (e), 6.1.5.3.5 (c), 6.1.5.4, 6.1.5.5.1 and 6.1.5.6);

(b) The code designating the type of packaging according to 6.1.2;

[1] *Relative density (d) is considered to be synonymous with Specific Gravity (SG) and is used throughout this text.*

(c) A code in two parts:

(i) a letter designating the packing group(s) for which the design type has been successfully tested:

X for packing groups I, II and III;
Y for packing groups II and III;
Z for packing group III only;

(ii) the relative density, rounded off to the first decimal, for which the design type has been tested for packagings without inner packagings intended to contain liquids; this may be omitted when the relative density does not exceed 1.2. For packagings intended to contain solids or inner packagings, the maximum gross mass in kilograms.

For light-gauge metal packagings, marked with the symbol "RID/ADR" according to 6.1.3.1 (a) (ii) intended to contain liquids having a viscosity at 23 °C exceeding 200 mm^2/s, the maximum gross mass in kg;

(d) Either the letter "S" denoting that the packaging is intended for the carriage of solids or inner packagings or, for packagings (other than combination packagings) intended to contain liquids, the hydraulic test pressure which the packaging was shown to withstand in kPa rounded down to the nearest 10 kPa.

For light-gauge metal packagings, marked with the symbol "RID/ADR, according to 6.1.3.1(a) (ii) intended to contain liquids having a viscosity at 23 °C exceeding 200 mm^2/s, the letter "S";

***NOTE**: The requirements of subparagraph (d) do not apply to packagings intended for the carriage of substances classified under UN Nos. 2814 or 2900 of Class 6.2.*

(e) The last two digits of the year during which the packaging was manufactured. Packagings of types 1H and 3H shall also be appropriately marked with the month of manufacture; this may be marked on the packaging in a different place from the remainder of the marking. An appropriate method is:

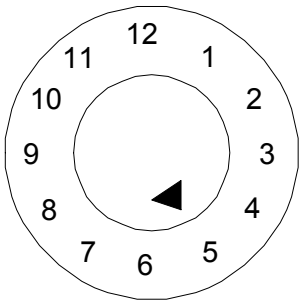

(f) The State authorizing the allocation of the mark, indicated by the distinguishing sign for motor vehicles in international traffic [2];

(g) The name of the manufacturer or other identification of the packaging specified by the competent authority.

[2] *Distinguishing sign for motor vehicles in international traffic prescribed in Vienna Convention on Road Traffic (1968).*

6.1.3.2 In addition to the durable markings prescribed in 6.1.3.1, every new metal drum of a capacity greater than 100 litres shall bear the marks described in 6.1.3.1 (a) to (e) on the bottom, with an indication of the nominal thickness of at least the metal used in the body (in mm, to 0.1 mm), in permanent form (e.g. embossed). When the nominal thickness of either head of a metal drum is thinner than that of the body, the nominal thickness of the top head, body, and bottom head shall be marked on the bottom in permanent form (e.g. embossed), for example "1.0-1.2-1.0" or "0.9-1.0-1.0". Nominal thickness of metal shall be determined according to the appropriate ISO standard, for example ISO 3574:1999 for steel. The marks indicated in 6.1.3.1 (f) and (g) shall not be applied in a permanent form except as provided in 6.1.3.5.

6.1.3.3 Every packaging other than those referred to in 6.1.3.2 liable to undergo a reconditioning process shall bear the marks indicated in 6.1.3.1 (a) to (e) in a permanent form. Marks are permanent if they are able to withstand the reconditioning process (e.g. embossed). For packagings other than metal drums of a capacity greater than 100 litres, these permanent marks may replace the corresponding durable markings prescribed in 6.1.3.1.

6.1.3.4 For remanufactured metal drums, if there is no change to the packaging type and no replacement or removal of integral structural components, the required markings need not be permanent. Every other remanufactured metal drum shall bear the markings in 6.1.3.1 (a) to (e) in a permanent form (e.g. embossed) on the top head or side.

6.1.3.5 Metal drums made from materials (e.g. stainless steel) designed to be reused repeatedly may bear the markings indicated in 6.1.3.1 (f) and (g) in a permanent form (e.g. embossed).

6.1.3.6 The marking in accordance with 6.1.3.1 is valid for only one design type or series of design types. Different surface treatments may fall within the same design type.

A "series of design types" means packagings of the same structural design, wall thickness, material and cross-section, which differ only in their lesser design heights from the design type approved.

The closures of receptacles shall be identifiable as those referred to in the test report.

6.1.3.7 Marking shall be applied in the sequence of the sub-paragraphs in 6.1.3.1; each element of the marking required in these sub-paragraphs and when appropriate sub-paragraphs (h) to (j) of 6.1.3.8 shall be clearly separated, e.g. by a slash or space, so as to be easily identifiable. For examples, see 6.1.3.11.

Any additional markings authorized by a competent authority shall still enable the parts of the mark to be correctly identified with reference to 6.1.3.1.

6.1.3.8 After reconditioning a packaging, the reconditioner shall apply to it a durable marking showing, in the following sequence:

(h) The State in which the reconditioning was carried out, indicated by the distinguishing sign for motor vehicles in international traffic [2];

(i) The name of the reconditioner or other identification of the packaging specified by the competent authority;

(j) The year of reconditioning; the letter "R"; and, for every packaging successfully passing the leakproofness test in 6.1.1.3, the additional letter "L".

---

[2] *Distinguishing sign for motor vehicles in international traffic prescribed in Vienna Convention on Road Traffic (1968).*

6.1.3.9 When, after reconditioning, the markings required by 6.1.3.1 (a) to (d) no longer appear on the top head or the side of a metal drum, the reconditioner also shall apply them in a durable form followed by 6.1.3.8 (h), (i) and (j). These markings shall not identify a greater performance capability than that for which the original design type had been tested and marked.

6.1.3.10 Packagings manufactured with recycled plastics material as defined in 1.2.1 shall be marked "REC". This mark shall be placed near the mark prescribed in 6.1.3.1.

6.1.3.11 ***Examples of markings for NEW packagings***

un	4G/Y145/S/02 NL/VL823	as in 6.1.3.1 (a) (i), (b), (c), (d) and (e) as in 6.1.3.1 (f) and (g)	For a new fibreboard box
un	1A1/Y1.4/150/98 NL/VL824	as in 6.1.3.1 (a) (i), (b), (c), (d) and (e) as in 6.1.3.1 (f) and (g)	For a new steel drum to contain liquids
un	1A2/Y150/S/01 NL/VL825	as in 6.1.3.1 (a) (i), (b), (c), (d) and (e) as in 6.1.3.1 (f) and (g)	For a new steel drum to contain solids, or inner packagings
un	4HW/Y136/S/98 NL/VL826	as in 6.1.3.1 (a) (i), (b), (c), (d) and (e) as in 6.1.3.1 (f) and (g)	For a new plastics box of equivalent specification
un	1A2/Y/100/01 USA/MM5	as in 6.1.3.1 (a) (i), (b), (c), (d) and (e) as in 6.1.3.1 (f) and (g)	For a remanufactured steel drum to contain liquids
RID/ADR/0A1/Y100/89 NL/VL123		as in 6.1.3.1 (a) (ii), (b), (c), (d) and (e) as in 6.1.3.1 (f) and (g)	For a new light gauge metal packaging, non-removable head
RID/ADR/0A2/Y20/S/04 NL/VL124		as in 6.1.3.1 (a) (ii), (b), (c), (d) and (e) as in 6.1.3.1 (f) and (g)	For a new light gauge metal packaging, removable head, intended to contain solids, or liquids with a viscosity at 23 °C exceeding 200 mm^2/s.

6.1.3.12 ***Examples of markings for RECONDITIONED packagings***

un	1A1/Y1.4/150/97 NL/RB/01 RL	as in 6.1.3.1 (a) (i), (b), (c), (d) and (e) as in 6.1.3.8 (h), (i) and (j)
un	1A2/Y150/S/99 USA/RB/00 R	as in 6.1.3.1 (a) (i), (b), (c), (d) and (e) as in 6.1.3.8 (h), (i) and (j)

6.1.3.13 ***Example of marking for SALVAGE packagings***

un	1A2T/Y300/S/01 USA/abc	as in 6.1.3.1 (a) (i), (b), (c), (d) and (e) as in 6.1.3.1 (f) and (g)

NOTE: *The markings, for which examples are given in 6.1.3.11, 6.1.3.12 and 6.1.3.13 may be applied in a single line or in multiple lines provided the correct sequence is respected.*

6.1.3.14 ***Certification***

By affixing marking in accordance with 6.1.3.1, it is certified that mass-produced packagings correspond to the approved design type and that the requirements referred to in the approval have been met.

6.1.4 Requirements for packagings

6.1.4.1 ***Steel drums***

1A1 non-removable head
1A2 removable head

6.1.4.1.1 Body and heads shall be constructed of steel sheet of a suitable type and of adequate thickness in relation to the capacity of the drum and to its intended use.

NOTE*: In the case of carbon steel drums, "suitable" steels are identified in ISO 3573:1999 "Hot rolled carbon steel sheet of commercial and drawing qualities" and ISO 3574:1999 "Cold-reduced carbon steel sheet of commercial and drawing qualities". For carbon steel drums below 100 litres "suitable" steels in addition to the above standards are also identified in ISO 11949:1995 "Cold-reduced electrolytic tinplate", ISO 11950:1995 "Cold-reduced electrolytic chromium/chromium oxide-coated steel" and ISO 11951:1995 "Cold-reduced blackplate in coil form for the production of tinplate or electrolytic chromium/chromium-oxide coated steel.*

6.1.4.1.2 Body seams shall be welded on drums intended to contain more than 40 litres of liquid. Body seams shall be mechanically seamed or welded on drums intended to contain solids or 40 litres or less of liquids.

6.1.4.1.3 Chimes shall be mechanically seamed or welded. Separate reinforcing rings may be applied.

6.1.4.1.4 The body of a drum of a capacity greater than 60 litres shall, in general, have at least two expanded rolling hoops or, alternatively, at least two separate rolling hoops. If there are separate rolling hoops they shall be fitted tightly on the body and so secured that they cannot shift. Rolling hoops shall not be spot welded.

6.1.4.1.5 Openings for filling, emptying and venting in the bodies or heads of non-removable head (1A1) drums shall not exceed 7 cm in diameter. Drums with larger openings are considered to be of the removable head type (1A2). Closures for openings in the bodies and heads of drums shall be so designed and applied that they will remain secure and leakproof under normal conditions of carriage. Closure flanges may be mechanically seamed or welded in place. Gaskets or other sealing elements shall be used with closures, unless the closure is inherently leakproof.

6.1.4.1.6 Closure devices for removable head (1A2) drums shall be so designed and applied that they will remain secure and drums will remain leakproof under normal conditions of carriage. Gaskets or other sealing elements shall be used with all removable heads.

6.1.4.1.7 If materials used for body, heads, closures and fittings are not in themselves compatible with the contents to be carried, suitable internal protective coatings or treatments shall be applied. These coatings or treatments shall retain their protective properties under normal conditions of carriage.

6.1.4.1.8 Maximum capacity of drum: 450 litres.

6.1.4.1.9 Maximum net mass: 400 kg.

6.1.4.2 ***Aluminium drums***

1B1 non-removable head
1B2 removable head

6.1.4.2.1 Body and heads shall be constructed of aluminium at least 99% pure or of an aluminium base alloy. Material shall be of a suitable type and of adequate thickness in relation to the capacity of the drum and to its intended use.

6.1.4.2.2 All seams shall be welded. Chime seams, if any, shall be reinforced by the application of separate reinforcing rings.

6.1.4.2.3 The body of a drum of a capacity greater than 60 litres shall, in general, have at least two expanded rolling hoops or, alternatively, at least two separate rolling hoops. If there are separate rolling hoops they shall be fitted tightly on the body and so secured that they cannot shift. Rolling hoops shall not be spot welded.

6.1.4.2.4 Openings for filling, emptying and venting in the bodies or heads of non-removable head (1B1) drums shall not exceed 7 cm in diameter. Drums with larger openings are considered to be of the removable head type (1B2). Closures for openings in the bodies and heads of drums shall be so designed and applied that they will remain secure and leakproof under normal conditions of carriage. Closure flanges shall be welded in place so that the weld provides a leakproof seam. Gaskets or other sealing elements shall be used with closures, unless the closure is inherently leakproof.

6.1.4.2.5 Closure devices for removable head (1B2) drums shall be so designed and applied that they will remain secure and drums will remain leakproof under normal conditions of carriage. Gaskets or other sealing elements shall be used with all removable heads.

6.1.4.2.6 Maximum capacity of drum: 450 litres.

6.1.4.2.7 Maximum net mass: 400 kg.

6.1.4.3 ***Drums of metal other than aluminium or steel***

1N1 non-removable head
1N2 removable head

6.1.4.3.1 The body and heads shall be constructed of a metal or of a metal alloy other than steel or aluminium. Material shall be of a suitable type and of adequate thickness in relation to the capacity of the drum and to its intended use.

6.1.4.3.2 Chime seams, if any, shall be reinforced by the application of separate reinforcing rings. All seams, if any, shall be joined (welded, solded, etc.) in accordance with the technical state of the art for the used metal or metal alloy.

6.1.4.3.3 The body of a drum of a capacity greater than 60 litres shall, in general, have at least two expanded rolling hoops or, alternatively, at least two separate rolling hoops. If there are separate rolling hoops they shall be fitted tightly on the body and so secured that they cannot shift. Rolling hoops shall not be spot welded.

6.1.4.3.4 Openings for filling, emptying and venting in the bodies or heads of non-removable head (1N1) drums shall not exceed 7 cm in diameter. Drums with larger openings are considered to be of the removable head type (1N2). Closures for openings in the bodies and heads of drums shall be so designed and applied that they will remain secure and leakproof under normal conditions of carriage. Closure flanges shall be joined in place (welded, solded, etc.)

in accordance with the technical state of the art for the used metal or metal alloy so that the seam join is leakproof. Gaskets or other sealing elements shall be used with closures, unless the closure is inherently leakproof.

6.1.4.3.5 Closure devices for removable head (1N2) drums shall be so designed and applied that they will remain secure and drums will remain leakproof under normal conditions of carriage. Gaskets or other sealing elements shall be used with all removable heads.

6.1.4.3.6 Maximum capacity of drum: 450 litres.

6.1.4.3.7 Maximum net mass: 400 kg.

6.1.4.4 ***Steel or aluminium jerricans***

3A1 steel, non-removable head
3A2 steel, removable head
3B1 aluminium, non-removable head
3B2 aluminium, removable head

6.1.4.4.1 Body and heads shall be constructed of steel sheet, of aluminium at least 99% pure or of an aluminium base alloy. Material shall be of a suitable type and of adequate thickness in relation to the capacity of the jerrican and to its intended use.

6.1.4.4.2 Chimes of steel jerricans shall be mechanically seamed or welded. Body seams of steel jerricans intended to contain more than 40 litres of liquid shall be welded. Body seams of steel jerricans intended to contain 40 litres or less shall be mechanically seamed or welded. For aluminium jerricans, all seams shall be welded. Chime seams, if any, shall be reinforced by the application of a separate reinforcing ring.

6.1.4.4.3 Openings in non-removable head jerricans (3A1 and 3B1) shall not exceed 7 cm in diameter. Jerricans with larger openings are considered to be of the removable head type (3A2 and 3B2). Closures shall be so designed that they will remain secure and leakproof under normal conditions of carriage. Gaskets or other sealing elements shall be used with closures, unless the closure is inherently leakproof.

6.1.4.4.4 If materials used for body, heads, closures and fittings are not in themselves compatible with the contents to be carried, suitable internal protective coatings or treatments shall be applied. These coatings or treatments shall retain their protective properties under normal conditions of carriage.

6.1.4.4.5 Maximum capacity of jerrican: 60 litres.

6.1.4.4.6 Maximum net mass: 120 kg.

6.1.4.5 ***Plywood drums***

1D

6.1.4.5.1 The wood used shall be well seasoned, commercially dry and free from any defect likely to lessen the effectiveness of the drum for the purpose intended. If a material other than plywood is used for the manufacture of the heads, it shall be of a quality equivalent to the plywood.

6.1.4.5.2 At least two-ply plywood shall be used for the body and at least three-ply plywood for the heads; the plies shall be firmly glued together by a water resistant adhesive with their grain crosswise.

6.1.4.5.3 The body and heads of the drum and their joins shall be of a design appropriate to the capacity of the drum and to its intended use.

6.1.4.5.4 In order to prevent sifting of the contents, lids shall be lined with kraft paper or some other equivalent material which shall be securely fastened to the lid and extend to the outside along its full circumference.

6.1.4.5.5 Maximum capacity of drum: 250 litres.

6.1.4.5.6 Maximum net mass: 400 kg.

6.1.4.6 ***Wooden barrels***

2C1 bung type
2C2 removable head

6.1.4.6.1 The wood used shall be of good quality, straight grained, well seasoned and free from knots, bark, rotten wood, sapwood or other defects likely to lessen the effectiveness of the barrel for the purpose intended.

6.1.4.6.2 The body and heads shall be of a design appropriate to the capacity of the barrel and to its intended use.

6.1.4.6.3 Staves and heads shall be sawn or cleft with the grain so that no annual ring extends over more than half the thickness of a stave or head.

6.1.4.6.4 Barrel hoops shall be of steel or iron of good quality. The hoops of removable head (2C2) barrels may be of a suitable hardwood.

6.1.4.6.5 Wooden barrels 2C1: the diameter of the bunghole shall not exceed half the width of the stave in which it is placed.

6.1.4.6.6 Wooden barrels 2C2: heads shall fit tightly into the crozes.

6.1.4.6.7 Maximum capacity of barrel: 250 litres.

6.1.4.6.8 Maximum net mass: 400 kg.

6.1.4.7 ***Fibre drums***

1G

6.1.4.7.1 The body of the drum shall consist of multiple plies of heavy paper or fibreboard (without corrugations) firmly glued or laminated together and may include one or more protective layers of bitumen, waxed kraft paper, metal foil, plastics material, etc.

6.1.4.7.2 Heads shall be of natural wood, fibreboard, metal, plywood, plastics or other suitable material and may include one or more protective layers of bitumen, waxed kraft paper, metal foil, plastics material, etc.

6.1.4.7.3 The body and heads of the drum and their joins shall be of a design appropriate to the capacity of the drum and to its intended use.

6.1.4.7.4 The assembled packaging shall be sufficiently water resistant so as not to delaminate under normal conditions of carriage.

6.1.4.7.5 Maximum capacity of drum: 450 litres.

6.1.4.7.6 Maximum net mass: 400 kg.

6.1.4.8 ***Plastics drums and jerricans***

1H1 drums, non-removable head
1H2 drums, removable head
3H1 jerricans, non-removable head
3H2 jerricans, removable head

6.1.4.8.1 The packaging shall be manufactured from suitable plastics material and be of adequate strength in relation to its capacity and intended use. Except for recycled plastics material as defined in 1.2.1, no used material other than production residues or regrind from the same manufacturing process may be used. The packaging shall be adequately resistant to ageing and to degradation caused either by the substance contained or by ultra-violet radiation. Any permeation of the substance contained in the package, or recycled plastics material used to produce new packaging, shall not constitute a danger under normal conditions of carriage.

6.1.4.8.2 If protection against ultra-violet radiation is required, it shall be provided by the addition of carbon black or other suitable pigments or inhibitors. These additives shall be compatible with the contents and remain effective throughout the life of the packaging. Where use is made of carbon black, pigments or inhibitors other than those used in the manufacture of the tested design type, retesting may be waived if the carbon black content does not exceed 2% by mass or if the pigment content does not exceed 3% by mass; the content of inhibitors of ultra-violet radiation is not limited.

6.1.4.8.3 Additives serving purposes other than protection against ultra-violet radiation may be included in the composition of the plastics material provided that they do not adversely affect the chemical and physical properties of the material of the packaging. In such circumstances, retesting may be waived.

6.1.4.8.4 The wall thickness at every point of the packaging shall be appropriate to its capacity and intended use, taking into account the stresses to which each point is liable to be exposed.

6.1.4.8.5 Openings for filling, emptying and venting in the bodies or heads of non-removable head drums (1H1) and jerricans (3H1) shall not exceed 7 cm in diameter. Drums and jerricans with larger openings are considered to be of the removable head type (1H2 and 3H2). Closures for openings in the bodies or heads of drums and jerricans shall be so designed and applied that they will remain secure and leakproof under normal conditions of carriage. Gaskets or other sealing elements shall be used with closures unless the closure is inherently leakproof.

6.1.4.8.6 Closure devices for removable head drums and jerricans (1H2 and 3H2) shall be so designed and applied that they will remain secure and leakproof under normal conditions of carriage. Gaskets shall be used with all removable heads unless the drum or jerrican design is such that, where the removable head is properly secured, the drum or jerrican is inherently leakproof.

6.1.4.8.7 The maximum permissible permeability for flammable liquids shall be 0.008 g/l.h at 23 °C (see 6.1.5.7).

6.1.4.8.8 Where recycled plastics material is used for production of new packaging, the specific properties of the recycled material shall be assured and documented regularly as part of a quality assurance programme recognised by the competent authority. The quality assurance programme shall include a record of proper pre-sorting and verification that each batch of

recycled plastics material has the proper melt flow rate, density, and tensile yield strength, consistent with that of the design type manufactured from such recycled material. This necessarily includes knowledge about the packaging material from which the recycled plastics have been derived, as well as the awareness of the prior contents of those packagings if those prior contents might reduce the capability of new packaging produced using that material. In addition, the packaging manufacturer's quality assurance programme under 6.1.1.4 shall include performance of the mechanical design type test in 6.1.5 on packagings manufactured from each batch of recycled plastics material. In this testing, stacking performance may be verified by appropriate dynamic compression testing rather than static load testing.

6.1.4.8.9 Maximum capacity of drums and jerricans: 1H1, 1H2: 450 litres
3H1, 3H2: 60 litres.

6.1.4.8.10 Maximum net mass: 1H1, 1H2: 400 kg
3H1, 3H2: 120 kg.

6.1.4.9 ***Boxes of natural wood***

4C1 ordinary
4C2 with sift-proof walls

6.1.4.9.1 The wood used shall be well seasoned, commercially dry and free from defects that would materially lessen the strength of any part of the box. The strength of the material used and the method of construction shall be appropriate to the capacity and intended use of the box. The tops and bottoms may be made of water resistant reconstituted wood such as hardboard, particle board or other suitable type.

6.1.4.9.2 Fastenings shall be resistant to vibration experienced under normal conditions of carriage. End grain nailing shall be avoided whenever practicable. Joins which are likely to be highly stressed shall be made using clenched or annular ring nails or equivalent fastenings.

6.1.4.9.3 Box 4C2: each part shall consist of one piece or be equivalent thereto. Parts are considered equivalent to one piece when one of the following methods of glued assembly is used: Lindermann joint, tongue and groove joint, ship lap or rabbet joint or butt joint with at least two corrugated metal fasteners at each joint.

6.1.4.9.4 Maximum net mass: 400 kg.

6.1.4.10 ***Plywood boxes***

4D

6.1.4.10.1 Plywood used shall be at least 3-ply. It shall be made from well seasoned rotary cut, sliced or sawn veneer, commercially dry and free from defects that would materially lessen the strength of the box. The strength of the material used and the method of construction shall be appropriate to the capacity and intended use of the box. All adjacent plies shall be glued with water resistant adhesive. Other suitable materials may be used together with plywood in the construction of boxes. Boxes shall be firmly nailed or secured to corner posts or ends or be assembled by equally suitable devices.

6.1.4.10.2 Maximum net mass: 400 kg.

6.1.4.11 ***Reconstituted wood boxes***

4F

6.1.4.11.1 The walls of boxes shall be made of water resistant reconstituted wood such as hardboard, particle board or other suitable type. The strength of the material used and the method of construction shall be appropriate to the capacity of the boxes and to their intended use.

6.1.4.11.2 Other parts of the boxes may be made of other suitable material.

6.1.4.11.3 Boxes shall be securely assembled by means of suitable devices.

6.1.4.11.4 Maximum net mass: 400 kg.

6.1.4.12 ***Fibreboard boxes***

4G

6.1.4.12.1 Strong and good quality solid or double-faced corrugated fibreboard (single or multiwall) shall be used, appropriate to the capacity of the box and to its intended use. The water resistance of the outer surface shall be such that the increase in mass, as determined in a test carried out over a period of 30 minutes by the Cobb method of determining water absorption, is not greater than 155 g/m^2 - see ISO 535:l991. It shall have proper bending qualities. Fibreboard shall be cut, creased without scoring, and slotted so as to permit assembly without cracking, surface breaks or undue bending. The fluting of corrugated fibreboard shall be firmly glued to the facings.

6.1.4.12.2 The ends of boxes may have a wooden frame or be entirely of wood or other suitable material. Reinforcements of wooden battens or other suitable material may be used.

6.1.4.12.3 Manufacturing joins in the body of boxes shall be taped, lapped and glued, or lapped and stitched with metal staples. Lapped joins shall have an appropriate overlap.

6.1.4.12.4 Where closing is effected by gluing or taping, a water resistant adhesive shall be used.

6.1.4.12.5 Boxes shall be designed so as to provide a good fit to the contents.

6.1.4.12.6 Maximum net mass: 400 kg.

6.1.4.13 ***Plastics boxes***

4H1 expanded plastics boxes
4H2 solid plastics boxes

6.1.4.13.1 The box shall be manufactured from suitable plastics material and be of adequate strength in relation to its capacity and intended use. The box shall be adequately resistant to ageing and to degradation caused either by the substance contained or by ultra-violet radiation.

6.1.4.13.2 An expanded plastics box shall comprise two parts made of a moulded expanded plastics material, a bottom section containing cavities for the inner packagings and a top section covering and interlocking with the bottom section. The top and bottom sections shall be designed so that the inner packagings fit snugly. The closure cap for any inner packaging shall not be in contact with the inside of the top section of this box.

6.1.4.13.3 For dispatch, an expanded plastics box shall be closed with a self-adhesive tape having sufficient tensile strength to prevent the box from opening. The adhesive tape shall be weather resistant and its adhesive compatible with the expanded plastics material of the box. Other closing devices at least equally effective may be used.

6.1.4.13.4 For solid plastics boxes, protection against ultra-violet radiation, if required, shall be provided by the addition of carbon black or other suitable pigments or inhibitors. These additives shall be compatible with the contents and remain effective throughout the life of the box. Where use is made of carbon black, pigments or inhibitors other than those used in the manufacture of the tested design type, retesting may be waived if the carbon black content does not exceed 2% by mass or if the pigment content does not exceed 3% by mass; the content of inhibitors of ultra-violet radiation is not limited.

6.1.4.13.5 Additives serving purposes other than protection against ultra-violet radiation may be included in the composition of the plastics material provided that they do not adversely affect the chemical or physical properties of the material of the box. In such circumstances, retesting may be waived.

6.1.4.13.6 Solid plastics boxes shall have closure devices made of a suitable material of adequate strength and so designed as to prevent the box from unintentional opening.

6.1.4.13.7 Where recycled plastics material is used for production of new packaging, the specific properties of the recycled material shall be assured and documented regularly as part of a quality assurance programme recognised by the competent authority. The quality assurance programme shall include a record of proper pre-sorting and verification that each batch of recycled plastics material has the proper melt flow rate, density, and tensile yield strength, consistent with that of the design type manufactured from such recycled material. This necessarily includes knowledge about the packaging material from which the recycled plastics have been derived, as well as the awareness of the prior contents of those packagings if those prior contents might reduce the capability of new packaging produced using that material. In addition, the packaging manufacturer's quality assurance programme under 6.1.1.4 shall include performance of the mechanical design type test in 6.1.5 on packagings manufactured from each batch of recycled plastics material. In this testing, stacking performance may be verified by appropriate dynamic compression testing rather than static load testing.

6.1.4.13.8 Maximum net mass 4H1: 60 kg
4H2: 400 kg.

6.1.4.14 ***Steel or aluminium boxes***

4A steel
4B aluminium

6.1.4.14.1 The strength of the metal and the construction of the box shall be appropriate to the capacity of the box and to its intended use.

6.1.4.14.2 Boxes shall be lined with fibreboard or felt packing pieces or shall have an inner liner or coating of suitable material, as required. If a double seamed metal liner is used, steps shall be taken to prevent the ingress of substances, particularly explosives, into the recesses of the seams.

6.1.4.14.3 Closures may be of any suitable type; they shall remain secured under normal conditions of carriage.

6.1.4.14.4 Maximum net mass: 400 kg.

6.1.4.15 ***Textile bags***

5L1 without inner liner or coating
5L2 sift-proof
5L3 water resistant

6.1.4.15.1 The textiles used shall be of good quality. The strength of the fabric and the construction of the bag shall be appropriate to the capacity of the bag and to its intended use.

6.1.4.15.2 Bags, sift-proof, 5L2: the bag shall be made sift-proof, for example by the use of:

(a) paper bonded to the inner surface of the bag by a water resistant adhesive such as bitumen; or

(b) plastics film bonded to the inner surface of the bag; or

(c) one or more inner liners made of paper or plastics material.

6.1.4.15.3 Bags, water resistant, 5L3: to prevent the entry of moisture the bag shall be made waterproof, for example by the use of:

(a) separate inner liners of water resistant paper (e.g. waxed kraft paper, tarred paper or plastics-coated kraft paper); or

(b) plastics film bonded to the inner surface of the bag; or

(c) one or more inner liners made of plastics material.

6.1.4.15.4 Maximum net mass: 50 kg.

6.1.4.16 ***Woven plastics bags***

5H1 without inner liner or coating
5H2 sift-proof
5H3 water resistant

6.1.4.16.1 Bags shall be made from stretched tapes or monofilaments of a suitable plastics material. The strength of the material used and the construction of the bag shall be appropriate to the capacity of the bag and to its intended use.

6.1.4.16.2 If the fabric is woven flat, the bags shall be made by sewing or some other method ensuring closure of the bottom and one side. If the fabric is tubular, the bag shall be closed by sewing, weaving or some other equally strong method of closure.

6.1.4.16.3 Bags, sift-proof, 5H2: the bag shall be made sift-proof, for example by means of:

(a) paper or a plastics film bonded to the inner surface of the bag; or

(b) one or more separate inner liners made of paper or plastics material.

6.1.4.16.4 Bags, water resistant, 5H3: to prevent the entry of moisture, the bag shall be made waterproof, for example by means of:

(a) separate inner liners of water resistant paper (e.g. waxed kraft paper, double-tarred kraft paper or plastics-coated kraft paper); or

(b) plastics film bonded to the inner or outer surface of the bag; or

(c) one or more inner plastics liners.

6.1.4.16.5 Maximum net mass: 50 kg.

6.1.4.17 ***Plastics film bags***

5H4

6.1.4.17.1 Bags shall be made of a suitable plastics material. The strength of the material used and the construction of the bag shall be appropriate to the capacity of the bag and to its intended use. Joins and closures shall withstand pressures and impacts liable to occur under normal conditions of carriage.

6.1.4.17.2 Maximum net mass: 50 kg.

6.1.4.18 ***Paper bags***

5M1 multiwall
5M2 multiwall, water resistant

6.1.4.18.1 Bags shall be made of a suitable kraft paper or of an equivalent paper with at least three plies, the middle ply of which may be net-cloth and adhesive bonding to the outer paper plies. The strength of the paper and the construction of the bags shall be appropriate to the capacity of the bag and to its intended use. Joins and closures shall be sift-proof.

6.1.4.18.2 Bags 5M2: to prevent the entry of moisture, a bag of four plies or more shall be made waterproof by the use of either a water resistant ply as one of the two outermost plies or a water resistant barrier made of a suitable protective material between the two outermost plies; a bag of three plies shall be made waterproof by the use of a water resistant ply as the outermost ply. Where there is a danger of the substance contained reacting with moisture or where it is packed damp, a waterproof ply or barrier, such as double-tarred kraft paper, plastics-coated kraft paper, plastics film bonded to the inner surface of the bag, or one or more inner plastics liners, shall also be placed next to the substance. Joins and closures shall be waterproof.

6.1.4.18.3 Maximum net mass : 50 kg.

6.1.4.19 ***Composite packagings (plastics material)***

6HA1 plastics receptacle with outer steel drum
6HA2 plastics receptacle with outer steel crate or box
6HB1 plastics receptacle with outer aluminium drum
6HB2 plastics receptacle with outer aluminium crate or box
6HC plastics receptacle with outer wooden box
6HD1 plastics receptacle with outer plywood drum
6HD2 plastics receptacle with outer plywood box
6HG1 plastics receptacle with outer fibre drum
6HG2 plastics receptacle with outer fibreboard box
6HH1 plastics receptacle with outer plastics drum
6HH2 plastics receptacle with outer solid plastics box

6.1.4.19.1 *Inner receptacle*

6.1.4.19.1.1 The requirements of 6.1.4.8.1 and 6.1.4.8.4 to 6.1.4.8.7 apply to plastics inner receptacles.

6.1.4.19.1.2 The plastics inner receptacle shall fit snugly inside the outer packaging, which shall be free of any projection that might abrade the plastics material.

6.1.4.19.1.3 Maximum capacity of inner receptacle:

6HA1, 6HB1, 6HD1, 6HG1, 6HH1:	250 litres
6HA2, 6HB2, 6HC, 6HD2, 6HG2, 6HH2:	60 litres.

6.1.4.19.1.4 Maximum net mass:

6HA1, 6HB1, 6HD1, 6HG1, 6HH1:	400 kg
6HA2, 6HB2, 6HC, 6HD2, 6HG2, 6HH2:	75 kg.

6.1.4.19.2 *Outer packaging*

6.1.4.19.2.1 Plastics receptacle with outer steel or aluminium drum 6HA1 or 6HB1; the relevant requirements of 6.1.4.1 or 6.1.4.2, as appropriate, apply to the construction of the outer packaging.

6.1.4.19.2.2 Plastics receptacle with outer steel or aluminium crate or box 6HA2 or 6HB2; the relevant requirements of 6.1.4.14 apply to the construction of the outer packaging.

6.1.4.19.2.3 Plastics receptacle with outer wooden box 6HC; the relevant requirements of 6.1.4.9 apply to the construction of the outer packaging.

6.1.4.19.2.4 Plastics receptacle with outer plywood drum 6HD1; the relevant requirements of 6.1.4.5 apply to the construction of the outer packaging.

6.1.4.19.2.5 Plastics receptacle with outer plywood box 6HD2; the relevant requirements of 6.1.4.10 apply to the construction of the outer packaging.

6.1.4.19.2.6 Plastics receptacle with outer fibre drum 6HG1; the requirements of 6.1.4.7.1 to 6.1.4.7.4 apply to the construction of the outer packaging.

6.1.4.19.2.7 Plastics receptacle with outer fibreboard box 6HG2; the relevant requirements of 6.1.4.12 apply to the construction of the outer packaging.

6.1.4.19.2.8 Plastics receptacle with outer plastics drum 6HH1; the requirements of 6.1.4.8.1 to 6.1.4.8.6 apply to the construction of the outer packaging.

6.1.4.19.2.9 Plastics receptacles with outer solid plastics box (including corrugated plastics material) 6HH2; the requirements of 6.1.4.13.1 and 6.1.4.13.4 to 6.1.4.13.6 apply to the construction of the outer packaging.

6.1.4.20 ***Composite packagings (glass, porcelain or stoneware)***

6PA1	receptacle with outer steel drum
6PA2	receptacle with outer steel crate or box
6PB1	receptacle with outer aluminium drum
6PB2	receptacle with outer aluminium crate or box
6PC	receptacle with outer wooden box
6PD1	receptacle with outer plywood drum

6PD2 receptacle with outer wickerwork hamper
6PG1 receptacle with outer fibre drum
6PG2 receptacle with outer fibreboard box
6PH1 receptacle with outer expanded plastics packaging
6PH2 receptacle with outer solid plastics packaging

6.1.4.20.1 *Inner receptacle*

6.1.4.20.1.1 Receptacles shall be of a suitable form (cylindrical or pear-shaped) and be made of good quality material free from any defect that could impair their strength. The walls shall be sufficiently thick at every point and free from internal stresses.

6.1.4.20.1.2 Screw-threaded plastics closures, ground glass stoppers or closures at least equally effective shall be used as closures for receptacles. Any part of the closure likely to come into contact with the contents of the receptacle shall be resistant to those contents. Care shall be taken to ensure that the closures are so fitted as to be leakproof and are suitably secured to prevent any loosening during carriage. If vented closures are necessary, they shall comply with 4.1.1.8.

6.1.4.20.1.3 The receptacle shall be firmly secured in the outer packaging by means of cushioning and/or absorbent materials.

6.1.4.20.1.4 Maximum capacity of receptacle: 60 litres.

6.1.4.20.1.5 Maximum net mass: 75 kg.

6.1.4.20.2 *Outer packaging*

6.1.4.20.2.1 Receptacle with outer steel drum 6PA1; the relevant requirements of 6.1.4.1 apply to the construction of the outer packaging. The removable lid required for this type of packaging may nevertheless be in the form of a cap.

6.1.4.20.2.2 Receptacle with outer steel crate or box 6PA2; the relevant requirements of 6.1.4.14 apply to the construction of the outer packaging. For cylindrical receptacles the outer packaging shall, when upright, rise above the receptacle and its closure. If the crate surrounds a pear-shaped receptacle and is of matching shape, the outer packaging shall be fitted with a protective cover (cap).

6.1.4.20.2.3 Receptacle with outer aluminium drum 6PB1; the relevant requirements of 6.1.4.2 apply to the construction of the outer packaging.

6.1.4.20.2.4 Receptacle with outer aluminium crate or box 6PB2; the relevant requirements of 6.1.4.14 apply to the construction of the outer packaging.

6.1.4.20.2.5 Receptacle with outer wooden box 6PC; the relevant requirements of 6.1.4.9 apply to the construction of the outer packaging.

6.1.4.20.2.6 Receptacle with outer plywood drum 6PD1; the relevant requirements of 6.1.4.5 apply to the construction of the outer packaging.

6.1.4.20.2.7 Receptacle with outer wickerwork hamper 6PD2. The wickerwork hamper shall be properly made with material of good quality. It shall be fitted with a protective cover (cap) so as to prevent damage to the receptacle.

6.1.4.20.2.8 Receptacle with outer fibre drum 6PG1; the relevant requirements of 6.1.4.7.1 to 6.1.4.7.4 apply to the construction of the outer packaging.

6.1.4.20.2.9 Receptacle with outer fibreboard box 6PG2; the relevant requirements of 6.1.4.12 apply to the construction of the outer packaging.

6.1.4.20.2.10 Receptacle with outer expanded plastics or solid plastics packaging (6PH1 or 6PH2); the materials of both outer packagings shall meet the relevant requirements of 6.1.4.13. Outer solid plastics packaging shall be manufactured from high density polyethylene or some other comparable plastics material. The removable lid for this type of packaging may nevertheless be in the form of a cap.

6.1.4.21 ***Combination packagings***

The relevant requirements of section 6.1.4 for the outer packagings to be used, are applicable.

NOTE: *For the inner and outer packagings to be used, see the relevant packing instructions in Chapter 4.1.*

6.1.4.22 ***Light gauge metal packagings***

0A1 non-removable-head
0A2 removable-head

6.1.4.22.1 The sheet metal for the body and ends shall be of suitable steel, and of a gauge appropriate to the capacity and intended use of the packaging.

6.1.4.22.2 The joints shall be welded, at least double-seamed by welting or produced by a method ensuring a similar degree of strength and leakproofness.

6.1.4.22.3 Inner coatings of zinc, tin, lacquer, etc. shall be tough and shall adhere to the steel at every point, including the closures.

6.1.4.22.4 Openings for filling, emptying and venting in the bodies or heads of non-removable head (0A1) packagings shall not exceed 7 cm in diameter. Packagings with larger openings shall be considered to be of the removable-head type (0A2).

6.1.4.22.5 The closures of non-removable-head packagings (0A1) shall either be of the screw-threaded type or be capable of being secured by a screwable device or a device at least equally effective. The closures of removable-head packagings (0A2) shall be so designed and fitted that they stay firmly closed and the packagings remain leakproof in normal conditions of carriage.

6.1.4.22.6 Maximum capacity of packagings: 40 litres.

6.1.4.22.7 Maximum net mass: 50 kg.

6.1.5 Test requirements for packagings

6.1.5.1 ***Performance and frequency of tests***

6.1.5.1.1 The design type of each packaging shall be tested as provided in 6.1.5 in accordance with procedures established and approved by the competent authority.

6.1.5.1.2 Tests shall be successfully performed on each packaging design type before such packaging is used. A packaging design type is defined by the design, size, material and thickness, manner of construction and packing, but may include various surface treatments. It also includes packagings which differ from the design type only in their lesser design height.

6.1.5.1.3 Tests shall be repeated on production samples at intervals established by the competent authority. For such tests on paper or fibreboard packagings, preparation at ambient conditions is considered equivalent to the requirements of 6.1.5.2.3.

6.1.5.1.4 Tests shall also be repeated after each modification which alters the design, material or manner of construction of a packaging.

6.1.5.1.5 The competent authority may permit the selective testing of packagings that differ only in minor respects from a tested type, e.g. smaller sizes of inner packagings or inner packagings of lower net mass; and packagings such as drums, bags and boxes which are produced with small reductions in external dimension(s).

6.1.5.1.6 Where an outer packaging of a combination packaging has been successfully tested with different types of inner packagings, a variety of such different inner packagings may also be assembled in this outer packaging. In addition, provided an equivalent level of performance is maintained, the following variations in inner packagings are allowed without further testing of the package:

(a) Inner packagings of equivalent or smaller size may be used provided:

(i) the inner packagings are of similar design to the tested inner packagings (e.g. shape - round, rectangular, etc.);

(ii) the material of construction of the inner packagings (glass, plastics, metal, etc.) offers resistance to impact and stacking forces equal to or greater than that of the originally tested inner packaging;

(iii) the inner packagings have the same or smaller openings and the closure is of similar design (e.g. screw cap, friction lid, etc.);

(iv) sufficient additional cushioning material is used to take up void spaces and to prevent significant movement of the inner packagings; and

(v) inner packagings are oriented within the outer packaging in the same manner as in the tested package.

(b) A lesser number of the tested inner packagings, or of the alternative types of inner packagings identified in (a) above, may be used provided sufficient cushioning is added to fill the void space(s) and to prevent significant movement of the inner packagings.

6.1.5.1.7 Articles or inner packagings of any type for solids or liquids may be assembled and carried without testing in an outer packaging under the following conditions:

(a) The outer packaging shall have been successfully tested in accordance with 6.1.5.3 with fragile (e.g. glass) inner packagings containing liquids using the packing group I drop height;

(b) The total combined gross mass of inner packagings shall not exceed one half the gross mass of inner packagings used for the drop test in (a) above;

(c) The thickness of cushioning material between inner packagings and between inner packagings and the outside of the packaging shall not be reduced below the corresponding thicknesses in the originally tested packaging; and if a single inner packaging was used in the original test, the thicknesses of cushioning between inner packagings shall not be less than the thickness of cushioning between the outside of the packaging and the inner packaging in the original test. If either fewer or smaller inner packagings are used (as compared to the inner packagings used in the drop test), sufficient additional cushioning material shall be used to take up void spaces;

(d) The outer packaging shall have passed successfully the stacking test in 6.1.5.6 while empty. The total mass of identical packages shall be based on the combined mass of inner packagings used for the drop test in (a) above;

(e) Inner packagings containing liquids shall be completely surrounded with a sufficient quantity of absorbent material to absorb the entire liquid contents of the inner packagings;

(f) If the outer packaging is intended to contain inner packagings for liquids and is not leakproof, or is intended to contain inner packagings for solids and is not siftproof, a means of containing any liquid or solid contents in the event of leakage shall be provided in the form of a leakproof liner, plastics bag or other equally efficient means of containment. For packagings containing liquids, the absorbent material required in (e) above shall be placed inside the means of containing the liquid contents;

(g) Packagings shall be marked in accordance with 6.1.3 as having been tested to packing group I performance for combination packagings. The marked gross mass in kilograms shall be the sum of the mass of the outer packaging plus one half of the mass of the inner packaging(s) as used for the drop test referred to in (a) above. Such a package mark shall also contain a letter "V" as described in 6.1.2.4.

6.1.5.1.8 The competent authority may at any time require proof, by tests in accordance with this section, that serially-produced packagings meet the requirements of the design type tests. For verification purposes records of such tests shall be maintained.

6.1.5.1.9 If an inner treatment or coating is required for safety reasons, it shall retain its protective properties even after the tests.

6.1.5.1.10 Provided the validity of the test results is not affected and with the approval of the competent authority, several tests may be made on one sample.

6.1.5.1.11 *Salvage packagings*

Salvage packagings (see 1.2.1) shall be tested and marked in accordance with the requirements applicable to packing group II packagings intended for the carriage of solids or inner packagings, except as follows:

(a) The test substance used in performing the tests shall be water, and the packagings shall be filled to not less than 98% of their maximum capacity. It is permissible to use additives, such as bags of lead shot, to achieve the requisite total package mass so long as they are placed so that the test results are not affected. Alternatively, in performing the drop test, the drop height may be varied in accordance with 6.1.5.3.5 (b);

(b) Packagings shall, in addition, have been successfully subjected to the leakproofness test at 30 kPa, with the results of this test reflected in the test report required by 6.1.5.8; and

(c) Packagings shall be marked with the letter "T" as described in 6.1.2.4.

6.1.5.2 ***Preparation of packagings for testing***

6.1.5.2.1 Tests shall be carried out on packagings prepared as for carriage including, with respect to combination packagings, the inner packagings used. Inner or single receptacles or packagings other than bags shall be filled to not less than 98% of their maximum capacity for liquids or 95% for solids. Bags shall be filled to the maximum mass at which they may be used. For combination packagings where the inner packaging is designed to carry liquids and solids, separate testing is required for both liquid and solid contents. The substances or articles to be carried in the packagings may be replaced by other substances or articles except where this would invalidate the results of the tests. For solids, when another substance is used it shall have the same physical characteristics (mass, grain size, etc.) as the substance to be carried. It is permissible to use additives, such as bags of lead shot, to achieve the requisite total package mass, so long as they are placed so that the test results are not affected.

6.1.5.2.2 In the drop tests for liquids, when another substance is used, it shall be of similar relative density and viscosity to those of the substance being carried. Water may also be used for the liquid drop test under the conditions in 6.1.5.3.5.

6.1.5.2.3 Paper or fibreboard packagings shall be conditioned for at least 24 hours in an atmosphere having a controlled temperature and relative humidity (r.h.). There are three options, one of which shall be chosen. The preferred atmosphere is 23 ± 2 °C and 50% ± 2% r.h. The two other options are 20 ± 2 °C and 65% ± 2% r.h. or 27 ± 2 °C and 65% ± 2% r.h.

NOTE: *Average values shall fall within these limits. Short-term fluctuations and measurement limitations may cause individual measurements to vary by up to ± 5% relative humidity without significant impairment of test reproducibility.*

6.1.5.2.4 Bung-type barrels made of natural wood shall be left filled with water for at least 24 hours before the tests.

6.1.5.2.5 To check that their chemical compatibility with the liquids is sufficient, plastics drums and jerricans in accordance with 6.1.4.8 and if necessary composite packagings (plastics material) in accordance with 6.1.4.19 shall be subjected to storage at ambient temperature for six months, during which time the test samples shall be kept filled with the goods they are intended to carry.

For the first and last 24 hours of storage, the test samples shall be placed with the closure downwards. However, packagings fitted with a vent shall be so placed on each occasion for five minutes only. After this storage the test samples shall undergo the tests prescribed in 6.1.5.3 to 6.1.5.6.

When it is known that the strength properties of the plastics material of the inner receptacles of composite packagings (plastics material) are not significantly altered by the action of the filling substance, it shall not be necessary to check that the chemical compatibility is sufficient.

A significant alteration in strength properties means:

(a) distinct embrittlement; or

(b) a considerable decrease in elasticity, unless related to a not less than proportionate increase in the elongation under load.

Where the behaviour of the plastics material has been established by other means, the above compatibility test may be dispensed with. Such procedures shall be at least equivalent to the above compatibility test and be recognized by the competent authority.

***NOTE**: For plastics drums and jerricans and composite packagings (plastics material) made of high or average molecular mass polyethylene, see also 6.1.5.2.6 below.*

6.1.5.2.6 For high molecular mass polyethylene drums and jerricans in accordance with 6.1.4.8 and if necessary, composite packagings of high molecular mass polyethylene in accordance with 6.1.4.19, conforming to the following specifications:

– relative density at 23 °C after thermal conditioning for one hour at 100 °C ≥ 0.940, in accordance with ISO Standard 1183,

– melt flow rate at 190 °C/21.6 kg load ≤ 12 g/10 min, in accordance with ISO Standard 1133,

and for jerricans in accordance with 6.1.4.8 and, if necessary, for composite packagings in accordance with 6.1.4.19 in medium molecular mass polyethylene conforming to the following specifications:

– relative density at 23 °C after thermal conditioning for one hour at 100 °C ≥ 0.940, in accordance with ISO Standard 1183,

– melt flow rate at 190 °C/2.16 kg load ≤ 0.5 g/10 min and ≥ 0.1g/10 min, in accordance with ISO Standard 1133,

– melt flow rate at 190 °C/5 kg load ≤ 3 g/10 min and ≥ 0.5 g/10 min, in accordance with ISO Standard 1133,

chemical compatibility with filling liquids assimilated in accordance with 4.1.1.19 may be verified as follows with standard liquids (see 6.1.6).

The standard liquids are representative for the processes of deterioration on high or medium molecular mass polyethylene, as there are softening through swelling, cracking under stress, molecular degradation and combinations thereof. The sufficient chemical compatibility of the packagings may be verified by storage of the required test samples for three weeks at 40 °C with the appropriate standard liquid(s); where this standard liquid is water, storage in accordance with this procedure is not required.

For the first and last 24 hours of storage, the test samples shall be placed with the closure downwards. However, packagings fitted with a vent shall be so placed on each occasion for five minutes only. After this storage, the test samples shall undergo the tests prescribed in 6.1.5.3 to 6.1.5.6.

The compatibility test for tert-Butyl hydroperoxide with more than 40% peroxide content and peroxyacetic acids of Class 5.2 shall not be carried out using standard liquids. For these substances, sufficient chemical compatibility of the test samples shall be verified during a storage period of six months at ambient temperature with the substances they are intended to carry.

Results of the procedure in accordance with this paragraph from high density, high or medium mass polyethylene packagings can be approved for an equal design type, the internal surface of which is fluorinated.

6.1.5.2.7 For packagings made of high or medium molecular mass polyethylene, as specified in 6.1.5.2.6, which have passed the test in 6.1.5.2.6, filling substances other than those assimilated in accordance with 4.1.1.19 may also be approved. Such approval shall be based on laboratory tests verifying that the effect of such filling substances on the test specimens is less than that of the appropriate standard liquid(s) taking into account the relevant processes of deterioration. The same conditions as those set out in 4.1.1.19.2 shall apply with respect to relative density and vapour pressure.

6.1.5.2.8 Provided that the strength properties of the plastics inner packagings of a combination packaging are not significantly altered by the action of the filling substance, proof of chemical compatibility is not necessary. A significant alteration in strength properties means:

(a) distinct embrittlement;

(b) a considerable decrease in elasticity, unless related to a not less than proportionate increase in elastic elongation.

6.1.5.3 ***Drop test*** [3]

6.1.5.3.1 *Number of test samples (per design type and manufacturer) and drop orientation*

For other than flat drops the centre of gravity shall be vertically over the point of impact.

Where more than one orientation is possible for a given drop test, the orientation most likely to result in failure of the packaging shall be used.

Packaging	No. of test samples	Drop orientation
(a) Steel drums Aluminium drums Drums of metal other than steel or aluminium Steel jerricans Aluminium jerricans Plywood drums Wooden barrels Fibre drums Plastics drums and jerricans Composite packagings which are in the shape of a drum Light gauge metal packagings	Six (three for each drop)	First drop (using three samples): the packaging shall strike the target diagonally on the chime or, if the packaging has no chime, on a circumferential seam or an edge. Second drop (using the other three samples): the packaging shall strike the target on the weakest part not tested by the first drop, for example a closure or, for some cylindrical drums, the welded longitudinal seam of the drum body
(b) Boxes of natural wood Plywood boxes Reconstituted wood boxes Fibreboard boxes Plastics boxes Steel or aluminium boxes Composite packagings which are in the shape of a box	Five (one for each drop)	First drop: flat on the bottom Second drop: flat on the top Third drop: flat on the long side Fourth drop: flat on the short side Fifth drop: on a corner
(c) Bags - single-ply with a side seam	Three (three drops per bag)	First drop: flat on a wide face Second drop: flat on a narrow face Third drop: on an end of the bag

[3] *See ISO Standard 2248.*

Packaging	No. of test samples	Drop orientation
(d) Bags - single-ply without a side seam, or multi-ply	Two (two drops per bag)	First drop: flat on a wide face Second drop: on an end of the bag
(e) Composite packagings (glass, stoneware or porcelain), marked with the symbol "RID/ADR" according to 6.1.3.1 (a) (ii) and which are in the shape of a drum or box	Three (one for each drop)	Diagonally on the bottom chime, or, if there is no chime, on a circumferential seam or the bottom edge

6.1.5.3.2 *Special preparation of test samples for the drop test*

The temperature of the test sample and its contents shall be reduced to –18 °C or lower for the following packagings:

(a) plastics drums (see 6.1.4.8);

(b) plastics jerricans (see 6.1.4.8);

(c) plastics boxes other than expanded plastics boxes (see 6.1.4.13);

(d) composite packagings (plastics material) (see 6.1.4.19); and

(e) combination packagings with plastics inner packagings, other than plastics bags intended to contain solids or articles.

Where test samples are prepared in this way, the conditioning in 6.1.5.2.3 may be waived. Test liquids shall be kept in the liquid state by the addition of anti-freeze if necessary.

6.1.5.3.3 Removable head packagings for liquids shall not be dropped until at least 24 hours after filling and closing to allow for any possible gasket relaxation.

6.1.5.3.4 *Target*

The target shall be a rigid, non-resilient, flat and horizontal surface.

6.1.5.3.5 *Drop height*

For solids and liquids, if the test is performed with the solid or liquid to be carried or with another substance having essentially the same physical characteristics:

Packing Group I	Packing Group II	Packing Group III
1.8 m	1.2 m	0.8 m

For liquids in single packagings and for inner packagings of combination packagings, if the test is performed with water:

***NOTE**: The term water includes water/antifreeze solutions with a minimum specific gravity of 0.95 for testing at - 18 °C.*

(a) where the substances to be carried have a relative density not exceeding 1.2:

Packing Group I	Packing Group II	Packing Group III
1.8 m	1.2 m	0.8 m

(b) where the substances to be carried have a relative density exceeding 1.2, the drop height shall be calculated on the basis of the relative density (d) of the substance to be carried, rounded up to the first decimal, as follows:

Packing Group I	Packing Group II	Packing Group III
d × 1.5 (m)	d × 1.0 (m)	d × 0.67 (m)

(c) for light-gauge metal packagings, marked with symbol "RID/ADR" according to 6.1.3.1(a) (ii) intended for the carriage of substances having a viscosity at 23 °C greater than 200 mm^2/s (corresponding to a flow time of 30 seconds with an ISO flow cup having a jet orifice of 6 mm diameter in accordance with ISO Standard 2431:1993)

(i) if the relative density does not exceed 1.2:

Packing group II	Packing group III
0.6 m	0.4 m

(ii) where the substances to be carried have a relative density (d) exceeding 1.2 the drop height shall be calculated on the basis of the relative density (d) of the substance to be carried, rounded up to the first decimal place, as follows:

Packing group II	Packing group III
d × 0.5 m	d × 0.33 m

6.1.5.3.6 *Criteria for passing the test*

6.1.5.3.6.1 Each packaging containing liquid shall be leakproof when equilibrium has been reached between the internal and external pressures, however for inner packagings of combination packagings and except for inner receptacles of composite packagings (glass, porcelain or stoneware), marked with the symbol "RID/ADR" according to 6.1.3.1 (a) (ii) it is not necessary that the pressures be equalized.

6.1.5.3.6.2 Where a packaging for solids undergoes a drop test and its upper face strikes the target, the test sample passes the test if the entire contents are retained by an inner packaging or inner receptacle (e.g. a plastics bag), even if the closure while retaining its containment function, is no longer sift-proof.

6.1.5.3.6.3 The packaging or outer packaging of a composite or combination packaging shall not exhibit any damage liable to affect safety during carriage. There shall be no leakage of the filling substance from the inner receptacle or inner packaging(s).

6.1.5.3.6.4 Neither the outermost ply of a bag nor an outer packaging may exhibit any damage liable to affect safety during carriage.

6.1.5.3.6.5 A slight discharge from the closure(s) upon impact is not considered to be a failure of the packaging provided that no further leakage occurs.

6.1.5.3.6.6 No rupture is permitted in packagings for goods of Class 1 which would permit the spillage of loose explosive substances or articles from the outer packaging.

6.1.5.4 ***Leakproofness test***

The leakproofness test shall be performed on all design types of packagings intended to contain liquids; however, this test is not required for

- inner packagings of combination packagings;
- inner receptacles of composite packagings (glass, porcelain or stoneware), marked with the symbol "RID/ADR" according to 6.1.3.1 (a) (ii);
- light gauge metal packagings, marked with the symbol "RID/ADR" according to 6.1.3.1 (a) (ii) intended for substances with a viscosity at 23 °C exceeding 200 mm^2/s.

6.1.5.4.1 *Number of test samples:* three test samples per design type and manufacturer.

6.1.5.4.2 *Special preparation of test samples for the test*: either vented closures shall be replaced by similar non-vented closures or the vent shall be sealed.

6.1.5.4.3 *Test method and pressure to be applied*: the packagings including their closures shall be restrained under water for 5 minutes while an internal air pressure is applied, the method of restraint shall not affect the results of the test.

The air pressure (gauge) to be applied shall be:

Packing Group I	Packing Group II	Packing Group III
Not less than 30 kPa (0.3 bar)	Not less than 20 kPa (0.2 bar)	Not less than 20 kPa (0.2 bar)

Other methods at least equally effective may be used.

6.1.5.4.4 *Criterion for passing the test*: there shall be no leakage.

6.1.5.5 ***Internal pressure (hydraulic) test***

6.1.5.5.1 *Packagings to be tested*

The internal pressure (hydraulic) test shall be carried out on all design types of metal, plastics and composite packagings intended to contain liquids. This test is not required for:

- inner packagings of combination packagings;
- inner receptacles of composite packagings (glass, porcelain or stoneware), marked with the symbol "RID/ADR" according to 6.1.3.1 (a) (ii);
- light gauge metal packagings, marked with the symbol "RID/ADR" according to 6.1.3.1 (a) (ii) intended for substances with a viscosity at 23 °C exceeding 200 mm^2/s.

6.1.5.5.2 *Number of test samples*: three test samples per design type and manufacturer.

6.1.5.5.3 *Special preparation of packagings for testing*: either vented closures shall be replaced by similar non-vented closures or the vent shall be sealed.

6.1.5.5.4 *Test method and pressure to be applied*: metal packagings and composite packagings (glass, porcelain or stoneware), including their closures, shall be subjected to the test pressure for 5 minutes. Plastics packagings and composite packagings (plastics material) including their closures shall be subjected to the test pressure for 30 minutes. This pressure is the one to be included in the marking required by 6.1.3.1 (d). The manner in which the packagings are supported shall not invalidate the test. The test pressure shall be applied continuously and evenly; it shall be kept constant throughout the test period. The hydraulic pressure (gauge) applied, as determined by any one of the following methods, shall be:

(a) not less than the total gauge pressure measured in the packaging (i.e. the vapour pressure of the filling liquid and the partial pressure of the air or other inert gases, minus 100 kPa) at 55 °C, multiplied by a safety factor of 1.5; this total gauge pressure shall be determined on the basis of a maximum degree of filling in accordance with 4.1.1.4 and a filling temperature of l5 °C; or

(b) not less than 1.75 times the vapour pressure at 50 °C of the liquid to be carried, minus 100 kPa but with a minimum test pressure of 100 kPa; or

(c) not less than 1.5 times the vapour pressure at 55 °C of the liquid to be carried, minus 100 kPa but with a minimum test pressure of 100 kPa.

6.1.5.5.5 In addition, packagings intended to contain liquids of packing group I shall be tested to a minimum test pressure of 250 kPa (gauge) for a test period of 5 or 30 minutes depending upon the material of construction of the packaging.

6.1.5.5.6 *Criterion for passing the test*: no packaging may leak.

6.1.5.6 ***Stacking test***

All design types of packagings other than bags and other than non-stackable composite packagings (glass, porcelain, or stoneware), marked with the symbol "RID/ADR" according to 6.1.3.1 (a) (ii) shall be subjected to a stacking test.

6.1.5.6.1 *Number of test samples*: three test samples per design type and manufacturer.

6.1.5.6.2 *Test method*: the test sample shall be subjected to a force applied to the top surface of the test sample equivalent to the total weight of identical packages which might be stacked on it during carriage; where the contents of the test sample are liquids with relative density different from that of the liquid to be carried, the force shall be calculated in relation to the latter. The minimum height of the stack including the test sample shall be 3 metres. The duration of the test shall be 24 hours except that plastics drums, jerricans, and composite packagings 6HH1 and 6HH2 intended for liquids shall be subjected to the stacking test for a period of 28 days at a temperature of not less than 40 °C.

For the test in accordance with 6.1.5.2.5, the original filling substance shall be used. For the test in accordance with 6.1.5.2.6, a stacking test shall be carried out with a standard liquid.

6.1.5.6.3 *Criteria for passing the test*: no test sample shall leak. In composite packagings or combination packagings, there shall be no leakage of the filling substance from the inner receptacle or inner packaging. No test sample shall show any deterioration which could adversely affect transport safety or any distortion liable to reduce its strength or cause instability in stacks of packages. Plastics packagings shall be cooled to ambient temperature before the assessment.

6.1.5.7 ***Supplementary permeability test for plastics drums and jerricans in accordance with 6.1.4.8 and for composite packagings (plastics material) in accordance with 6.1.4.19 intended for the carriage of liquids having a flash-point # 61 °C, other than 6HA1 packagings***

Polyethylene packagings need be subjected to this test only if they are to be approved for the carriage of benzene, toluene, xylene or mixtures and preparations containing those substances.

6.1.5.7.1 *Number of test samples:* three packagings per design type and manufacturer.

6.1.5.7.2 *Special preparation of the test sample for the test:* the test samples are to be pre-stored with the original filling substance in accordance with 6.1.5.2.5, or, for high molecular mass polyethylene packagings, with the standard liquid mixture of hydrocarbons (white spirit) in accordance with 6.1.5.2.6.

6.1.5.7.3 *Test method:* the test samples filled with the substance for which the packaging is to be approved shall be weighed before and after storage for 28 days at 23 °C and 50% relative atmospheric humidity. For high molecular mass polyethylene packagings, the test may be carried out with the standard liquid mixture of hydrocarbons (white spirit) in place of benzene, toluene or xylene.

6.1.5.7.4 *Criterion for passing the test:* permeability shall not exceed 0.008 g/l.h.

6.1.5.8 ***Test Report***

6.1.5.8.1 A test report containing at least the following particulars shall be drawn up and shall be available to the users of the packaging:

1. Name and address of the test facility;
2. Name and address of applicant (where appropriate);
3. A unique test report identification;
4. Date of the test report;
5. Manufacturer of the packaging;
6. Description of the packaging design type (e.g. dimensions, materials, closures, thickness, etc.), including method of manufacture (e.g. blow moulding) and which may include drawing(s) and/or photograph(s);
7. Maximum capacity;
8. Characteristics of test contents, e.g. viscosity and relative density for liquids and particle size for solids;
9. Test descriptions and results;
10. The test report shall be signed with the name and status of the signatory.

6.1.5.8.2 The test report shall contain statements that the packaging prepared as for carriage was tested in accordance with the appropriate requirements of this section and that the use of other packaging methods or components may render it invalid. A copy of the test report shall be available to the competent authority.

6.1.6 Standard liquids for verifying the chemical compatibility testing of high or medium molecular mass polyethylene packagings, including IBCs, in accordance with 6.1.5.2.6 and 6.5.4.3.5, respectively

6.1.6.1 The following standard liquids shall be used for this plastics material.

(a) ***Wetting Solution*** for substances causing severe cracking in polyethylene under stress, in particular for all solutions and preparations containing wetting agents.

An aqueous solution of 1 to 10% of a wetting agent shall be used. The surface tension of this solution shall be 31 to 35 mN/m at 23 °C.

The stacking test shall be carried out on the basis of a relative density of not less than 1.20.

A compatibility test with acetic acid is not required if adequate chemical compatibility is proved with a wetting solution.

For filling substances causing cracking in polyethylene under stress which is resistant to the wetting solution, adequate chemical compatibility may be proved after preliminary storing for three weeks at 40 °C in accordance with 6.1.5.2.6, but with the original filling matter;

(b) ***Acetic acid*** for substances and preparations causing cracking in polyethylene under stress, in particular for monocarboxylic acids and monovalent alcohols.

Acetic acid in 98 to 100% concentration shall be used.
Relative density = 1.05.

The stacking test shall be carried out on the basis of a relative density not less than 1.1.

In the case of filling substances causing polyethylene to swell more than acetic acid and to such an extent that the polyethylene mass is increased by up to 4%, adequate chemical compatibility may be proved after preliminary storing for three weeks at 40 °C, in accordance with 6.1.5.2.6 but with the original filling matter;

(c) ***Normal butyl acetate/normal butyl acetate-saturated wetting solution*** for substances and preparations causing polyethylene to swell to such an extent that the polyethylene mass is increased by about 4% and at the same time causing cracking under stress, in particular for phyto-sanitary products, liquid paints and esters. Normal butyl acetate in 98 to 100% concentration shall be used for preliminary storage in accordance with 6.1.5.2.6.

For the stacking test in accordance with 6.1.5.6, a test liquid consisting of a 1 to 10% aqueous wetting solution mixed with 2% normal butyl acetate conforming to (a) above shall be used.

The stacking test shall be carried out on the basis of a relative density not less than 1.0.

In the case of filling substances causing polyethylene to swell more than normal butyl acetate and to such an extent that the polyethylene mass is increased by up to 7.5%, adequate chemical compatibility may be proved after preliminary storing for three weeks at 40 °C, in accordance with 6.1.5.2.6 but with the original filling matter;

(d) ***Mixture of hydrocarbons (white spirit)*** for substances and preparations causing polyethylene to swell, in particular for hydrocarbons, esters and ketones.

A mixture of hydrocarbons having a boiling range 160 °C to 220 °C, relative density 0.78-0.80, flash-point > 50 °C and an aromatic content 16% to 21% shall be used.

The stacking test shall be carried out on the basis of a relative density not less than 1.0.

In the case of filling substances causing polyethylene to swell to such an extent that the polyethylene mass is increased by more than 7.5%, adequate chemical compatibility may be proved after preliminary storing for three weeks at 40 °C, in accordance with 6.1.5.2.6 but with the original filling matter;

(e) ***Nitric acid*** for all substances and preparations having an oxidizing effect on polyethylene and causing molecular degradation identical to or less than 55% nitric acid.

Nitric acid in a concentration of not less than 55% shall be used.

The stacking test shall be carried out on the basis of a relative density of not less than 1.4.

In the case of filling substances more strongly oxidizing than 55% nitric acid or causing degradation of the molecular mass proceed in accordance with 6.1.5.2.5.

The period of use shall be determined in such cases by observing the degree of damage (e.g. two years for nitric acid in not less than 55% concentration);

(f) ***Water*** for substances which do not attack polyethylene in any of the cases referred to under (a) to (e), in particular for inorganic acids and lyes, aqueous saline solutions, polyvalent alcohols and organic substances in aqueous solution.

The stacking test shall be carried out on the basis of a relative density of not less than 1.2.

CHAPTER 6.2

REQUIREMENTS FOR THE CONSTRUCTION AND TESTING OF PRESSURE RECEPTACLES, AEROSOL DISPENSERS AND SMALL RECEPTACLES CONTAINING GAS (GAS CARTRIDGES)

6.2.1 General requirements

NOTE: *For aerosol dispensers and small receptacles containing gas (gas cartridges) see 6.2.4.*

6.2.1.1 *Design and construction*

6.2.1.1.1 Pressure receptacles and their closures shall be designed, calculated, manufactured, tested and equipped in such a way as to withstand all conditions, including fatigue, to which they will be subjected during their normal use and during normal conditions of carriage.

In the design of pressure receptacles, all relevant factors shall be taken into account such as:

- internal pressure;
- ambient and operational temperatures, including during carriage;
- dynamic loads.

Normally the wall thickness shall be determined by calculation, accompanied, if needed, by experimental stress analysis. The wall thickness may be determined by experimental means.

Appropriate design calculations for the pressure envelope and supporting components shall be used to ensure the safety of the pressure receptacles concerned.

The minimum wall thickness to withstand pressure shall be calculated in particular with regard to:

- the calculation pressures, which shall not be less than the test pressure;
- the calculation temperatures allowing for appropriate safety margins;
- the maximum stresses and peak stress concentrations where necessary;
- factors inherent to the properties of the material.

For welded pressure receptacles, only metals of weldable quality whose adequate impact strength at an ambient temperature of - 20° C can be guaranteed shall be used.

The test pressure of pressure receptacles is prescribed in packing instruction P200 in 4.1.4.1 for cylinders, tubes, pressure drums and bundles of cylinders. The test pressure for cryogenic receptacles, closed, shall not be less than 1.3 times the maximum working pressure increased by 1 bar for vacuum insulated pressure receptacles.

Material characteristics to be considered are, when applicable:

- yield stress;
- tensile strength;
- time-dependent strength;
- fatigue data;
- Young's modulus (modulus of elasticity);
- appropriate amount of plastic strain;
- impact strength;
- fracture resistance.

6.2.1.1.2 Pressure receptacles for UN No. 1001, acetylene, dissolved, shall be filled entirely with a porous mass, uniformly distributed, of a type approved by the competent authority and which:

(a) does not attack the pressure receptacles or form harmful or dangerous compounds either with the acetylene or with the solvent;

(b) is capable of preventing the spread of decomposition of the acetylene in the porous mass.

The solvent shall not attack the pressure receptacles.

The above requirements, excluding those for the solvent, apply equally to pressure receptacles for UN No. 3374 acetylene, solvent free.

6.2.1.1.3 Pressure receptacles assembled in bundles shall be structurally supported and held together as a unit. Pressure receptacles shall be secured in a manner that prevents movement in relation to the structural assembly and movement that would result in the concentration of harmful local stresses. Manifolds shall be designed such that they are protected from impact. For toxic liquefied gases with a classification code of 2T, 2TF, 2TC, 2TO, 2TFC or 2TOC, means shall be provided to ensure that each pressure receptacle can be separately filled and that no interchange of pressure receptacle contents can occur during carriage.

6.2.1.1.4 Contact between dissimilar metals which could result in damage by galvanic action shall be avoided.

6.2.1.1.5 The following requirements apply to the construction of closed cryogenic receptacles for refrigerated liquefied gases:

6.2.1.1.5.1 The mechanical properties of the metal used shall be established for each pressure receptacle, including the impact strength and the bending coefficient; with regard to the impact strength see 6.8.5.3;

6.2.1.1.5.2 The pressure receptacles shall be thermally insulated. The thermal insulation shall be protected against impact by means of a jacket. If the space between the pressure receptacle and the jacket is evacuated of air (vacuum-insulation), the jacket shall be designed to withstand without permanent deformation an external pressure of at least 100 kPa (1 bar) calculated in accordance with a recognized technical code or a calculated critical collapsing pressure of not less than 200 kPa (2 bar) gauge pressure. If the jacket is so closed as to be gas-tight (e.g. in the case of vacuum-insulation), a device shall be provided to prevent any dangerous pressure from developing in the insulating layer in the event of inadequate gas-tightness of the pressure receptacle or its fittings. The device shall prevent moisture from penetrating into the insulation.

6.2.1.1.5.3 Closed cryogenic receptacles intended for the carriage of refrigerated liquefied gases having a boiling point below -182 °C at atmospheric pressure shall not include materials which may react with oxygen or oxygen enriched atmospheres in a dangerous manner, when located in parts of the thermal insulation where there is a risk of contact with oxygen or with oxygen enriched liquid.

6.2.1.1.5.4 Closed cryogenic receptacles shall be designed and constructed with suitable lifting and securing arrangements.

6.2.1.2 ***Materials of pressure receptacles***

The materials of which the pressure receptacles and their closures are made as well as all substances that might come into contact with the contents shall not be liable to attack the contents or form harmful or dangerous compounds therewith.

The following materials may be used:

(a) carbon steel for compressed, liquefied, refrigerated liquefied gases and dissolved gases as well as for substances not in Class 2 listed in Table 3 of packing instruction P200 in 4.1.4.1;

(b) alloy steel (special steels), nickel, nickel alloy (such as monel) for compressed, liquefied, refrigerated liquefied gases and dissolved gases as well as for substances not in Class 2 listed in Table 3 of packing instruction P200 in 4.1.4.1;

(c) copper for:

(i) gases of classification codes 1A, 1O, 1F and 1TF, whose filling pressure referred to a temperature of 15 °C does not exceed 2 MPa (20 bar);

(ii) gases of classification code 2A and also UN No. 1033 dimethyl ether; UN No. 1037 ethyl chloride; UN No. 1063 methyl chloride; UN No. 1079 sulphur dioxide; UN No. 1085 vinyl bromide; UN No. 1086 vinyl chloride; and UN No. 3300 ethylene oxide and carbon dioxide mixture with more than 87% ethylene oxide;

(iii) gases of classification codes 3A, 3O and 3F;

(d) aluminium alloy: see special requirement "a" of packing instruction P200 (10) in 4.1.4.1;

(e) composite material for compressed, liquefied, refrigerated liquefied gases and dissolved gases;

(f) synthetic materials for refrigerated liquefied gases; and

(g) glass for the refrigerated liquefied gases of classification code 3A other than UN No. 2187 carbon dioxide, refrigerated, liquid or mixtures thereof, and gases of classification code 3O.

6.2.1.3 ***Service equipment***

6.2.1.3.1 *Openings*

Pressure drums may be provided with openings for filling and discharge and with other openings intended for level gauges, pressure gauges or relief devices. The number of openings shall be kept to a minimum consistent with safe operations. Pressure drums may also be provided with an inspection opening, which shall be closed by an effective closure.

6.2.1.3.2 *Fittings*

(a) If cylinders are fitted with a device to prevent rolling, this device shall not be integral with the valve cap;

(b) Pressure drums which are capable of being rolled shall be equipped with rolling hoops or be otherwise protected against damage due to rolling (e.g. by corrosion resistant metal sprayed on to the pressure receptacle surface);

(c) Pressure drums and cryogenic receptacles, which are not capable of being rolled, shall be fitted with devices (skids, rings, straps,) ensuring that they can be safely handled by mechanical means and so arranged as not to impair the strength of, nor cause undue stresses in, the wall of the pressure receptacle;

(d) Bundles of cylinders shall be fitted with appropriate devices ensuring that they can be handled and carried safely. The manifold shall have at least the same test pressure as the cylinders. The manifold and the master cock shall be situated so as to be protected against any damage;

(e) If level gauges, pressure gauges or relief devices are installed, they shall be protected in the same way as is required for valves in 4.1.6.8;

(f) Pressure receptacles whose filling is measured by volume shall be provided with a level indicator.

6.2.1.3.3 *Additional requirements for closed cryogenic receptacles*

6.2.1.3.3.1 Each filling and discharge opening in a closed cryogenic receptacle used for the carriage of flammable refrigerated liquefied gases shall be fitted with at least two mutually independent shut-off devices in series, the first being a stop-valve, the second being a cap or equivalent device.

6.2.1.3.3.2 For sections of piping which can be closed at both ends and where liquid product can be trapped, a method of automatic pressure-relief shall be provided to prevent excess pressure build-up within the piping.

6.2.1.3.3.3 Each connection on a closed cryogenic receptacle shall be clearly marked to indicate its function (e.g. vapour or liquid phase).

6.2.1.3.3.4 Pressure-relief devices

6.2.1.3.3.4.1 Cryogenic receptacles, closed, shall be fitted with one or more pressure relief devices to protect the vessel against excess pressure. Excess pressure means a pressure in excess of 110% of the maximum working pressure due to normal heat leak or in excess of the test pressure due to the loss of vacuum for vacuum insulated pressure receptacles or due to the failure in the open position of a pressure build up system.

6.2.1.3.3.4.2 Closed cryogenic receptacles may, in addition, have a frangible disc in parallel with the spring-loaded device(s) in order to meet the requirements of 6.2.1.3.3.5.

6.2.1.3.3.4.3 Connections to pressure-relief devices shall be of sufficient size to enable the required discharge to pass unrestricted to the pressure-relief device.

6.2.1.3.3.4.4 All pressure-relief device inlets shall under maximum filling conditions be situated in the vapour space of the closed cryogenic receptacle and the devices shall be so arranged as to ensure that the escaping vapour is discharged unrestrictedly.

6.2.1.3.3.5 Capacity and setting of pressure-relief devices

NOTE: *In relation to pressure-relief devices of closed cryogenic receptacles, maximum allowable working pressure (MAWP) means the maximum effective gauge pressure permissible at the top of a loaded closed cryogenic receptacle in its operating position including the highest effective pressure during filling and discharge.*

6.2.1.3.3.5.1 The pressure-relief device shall open automatically at a pressure not less than the MAWP and be fully open at a pressure equal to 110% of the MAWP. It shall, after discharge, close at a pressure not lower than 10% below the pressure at which discharge starts and shall remain closed at all lower pressures.

6.2.1.3.3.5.2 Frangible discs shall be set to rupture at a nominal pressure which is the lower of either the test pressure or 150% of the MAWP.

6.2.1.3.3.5.3 In the case of the loss of vacuum in a vacuum-insulated closed cryogenic receptacle, the combined capacity of all pressure-relief devices installed shall be sufficient so that the pressure (including accumulation) inside the closed cryogenic receptacle does not exceed 120% of the MAWP.

6.2.1.3.3.5.4 The required capacity of the pressure-relief devices shall be calculated in accordance with a well-established technical code recognized by the competent authority [1].

6.2.1.4 ***Approval of pressure receptacles***

6.2.1.4.1 The conformity of pressure receptacles, having a test pressure capacity product of more than 150 MPa.litre (1 500 bar.litre) with the provisions of Class 2, shall be assessed by one of the following methods:

(a) Single pressure receptacles shall be examined, tested and approved by a testing and certifying body approved by the competent authority of the country of approval [2], on the basis of the technical documentation and declaration of the manufacturer on compliance with the relevant provisions of Class 2.

The technical documentation shall include full specifications on design and construction, and full documentation on the manufacturing and testing; or

(b) The construction of the pressure receptacles shall be tested and approved by a testing and certifying body approved by the competent authority of the country of approval [2] on the basis of the technical documentation with regard to their compliance with the relevant provisions of Class 2.

---

[1] *See for example CGA Publications S-1.2-1995 and S-1.1-2001.*

[2] *If the country of approval is not a contracting party to ADR, the competent authority of a contracting party to ADR.*

Pressure receptacles shall furthermore be designed, manufactured and tested according to a comprehensive quality assurance programme for design, manufacture, final inspection and testing. The quality assurance programme shall guarantee the conformity of the pressure receptacles with the relevant provisions of Class 2 and shall be approved and supervised by a testing and certifying body approved by the competent authority of the country of approval [2]; or

(c) The design type of the pressure receptacles shall be approved by a testing and certifying body approved by the competent authority of the country of approval [2]. Any pressure receptacle of this design shall be manufactured and tested according to a quality assurance programme for production, final inspection and testing, which shall be approved and supervised by a testing and certifying body approved by the competent authority of the country of approval [2]; or

(d) The design type of the pressure receptacles shall be approved by a testing and certifying body approved by the competent authority of the country of approval [2]. Any receptacle of this design shall be tested under the supervision of a testing and certifying body approved by the competent authority of the country of approval [2] on the basis of a declaration of the manufacturer on compliance with the approved design and the relevant provisions of Class 2.

6.2.1.4.2 The conformity of pressure receptacles having a test pressure capacity product of more than 30 MPa.litre (300 bar.litre) and not more than 150 MPa.litre (1 500 bar.litre) with the provisions of Class 2 shall be assessed by one of the methods described in 6.2.1.4.1 or by one of the following methods:

(a) The pressure receptacles shall be designed, manufactured and tested according to a comprehensive quality assurance programme for their design, manufacture, final inspection and testing, approved and supervised by a testing and certifying body approved by the competent authority of the country of approval [2]; or

(b) The design type of the pressure receptacle shall be approved by a testing and certifying body approved by the competent authority of the country of approval [2]. The compliance of any pressure receptacle with the approved design shall be declared in writing by the manufacturer on the basis of his quality assurance programme for final inspection and testing of pressure receptacles, approved and supervised by a testing and certifying body approved by the competent authority of the country of approval [2]; or

(c) The design type of the pressure receptacle shall be approved by a testing and certifying body approved by the competent authority of the country of approval [2]. The compliance of any pressure receptacle with the approved design shall be declared in writing by the manufacturer and all pressure receptacles of this type shall be tested under the supervision of a testing and certifying body approved by the competent authority of the country of approval [2];

6.2.1.4.3 The conformity of pressure receptacles, having a test pressure capacity product of not more than 30 MPa.litre (300 bar.litre) with the provisions for Class 2 shall be assessed by one of the methods described in 6.2.1.4.1 or 6.2.1.4.2 or by one of the following methods:

(a) The compliance of any pressure receptacle with a design, fully specified in technical documentation, shall be declared in writing by the manufacturer and pressure receptacles of this design shall be tested under the supervision of a testing and certifying body approved by the competent authority of the country of approval [2]; or

---

[2] *If the country of approval is not a contracting party to ADR, the competent authority of a contracting party to ADR.*

(b) The design type of the pressure receptacles shall be approved by a testing and certifying body approved by the competent authority of the country of approval [2]. The compliance of all pressure receptacles with the approved design shall be declared in writing by the manufacturer and all pressure receptacles of this type shall be tested individually.

6.2.1.4.4 The requirements of 6.2.1.4.1 to 6.2.1.4.3 shall be deemed to be complied with:

(a) as regards the quality assurance systems mentioned in 6.2.1.4.1 and 6.2.1.4.2, if they conform to the relevant European Standard of the EN ISO 9000 series;

(b) in their entirety, if the relevant conformity assessment procedures of Council Directive 99/36/EC [3] have been complied with as follows:

(i) for the pressure receptacles listed under 6.2.1.4.1, the modules G, or H1, or B in combination with D, or B in combination with F;

(ii) for the pressure receptacles listed under 6.2.1.4.2, the modules H, or B in combination with E, or B in combination C1, or B1 in combination with F, or B1 in combination with D;

(iii) for the pressure receptacles listed under 6.2.1.4.3, the modules A1, or D1, or E1.

6.2.1.4.5 *Requirements for manufacturers*

The manufacturer shall be technically competent and shall possess all suitable means required for the satisfactory manufacture of pressure receptacles; this relates in particular to qualified personnel:

(a) to supervise the entire manufacturing process;

(b) to carry out joining of materials;

(c) to carry out the relevant tests.

The proficiency test of a manufacturer shall in all instances be carried out by a testing and certifying body approved by the competent authority of the country of approval [2]. The particular certification process the manufacturer intends to apply shall be taken into consideration.

6.2.1.4.6 *Requirements for testing and certifying bodies*

Testing and certifying bodies shall be independent from manufacturing enterprises and technologically competent to the degree required. These requirements shall be deemed to be met if the bodies have been approved on the basis of an accreditation procedure in accordance with the relevant European standards of series EN 45000.

---

[2] *If the country of approval is not a contracting party to ADR, the competent authority of a contracting party to ADR.*

[3] *Council Directive 99/36/EC concerning transportable pressure equipment (Official Journal of the European Communities, No. L 138 of 1.06.1999).*

6.2.1.5 ***Initial inspection and test***

6.2.1.5.1 New pressure receptacles, other than closed cryogenic receptacles, shall be subjected to testing and inspection during and after manufacture in accordance with the following:

On an adequate sample of pressure receptacles:

(a) Testing of the mechanical characteristics of the material of construction;

(b) Verification of the minimum wall thickness;

(c) Verification of the homogeneity of the material for each manufacturing batch;

(d) Inspection of the external and internal conditions of the pressure receptacles;

(e) Inspection of the neck threads;

(f) Verification of the conformance with the design standard;

For all pressure receptacles:

(g) A hydraulic pressure test. Pressure receptacles shall withstand the test pressure without undergoing permanent deformation or exhibiting cracks;

NOTE : *With the agreement of the competent authority, the hydraulic pressure test may be replaced by a test using a gas, where such an operation does not entail any danger.*

(h) Inspection and assessment of manufacturing defects and either repairing them or rendering the pressure receptacles unserviceable. In the case of welded pressure receptacles, particular attention shall be paid to the quality of the welds;

(i) An inspection of the markings on the pressure receptacles;

(j) In addition, pressure receptacles intended for the carriage of UN No. 1001 acetylene, dissolved, and UN No. 3374 acetylene, solvent free, shall be inspected to ensure proper installation and condition of the porous mass and, if applicable, the quantity of solvent.

6.2.1.5.2 On an adequate sample of closed cryogenic receptacles, the inspections and tests specified in 6.2.1.5.1 (a), (b), (d), and (f) shall be performed. In addition, welds shall be inspected by radiographic, ultrasonic or another suitable non-destructive test method on a sample of closed cryogenic receptacles according to the applicable design and construction standard. This weld inspection does not apply to the jacket.

Additionally, all closed cryogenic receptacles shall undergo the initial inspections and tests specified in 6.2.1.5.1 (g), (h), and (i), as well as a leakproofness test and a test of the satisfactory operation of the service equipment after assembly.

6.2.1.5.3 *Specific provisions applying to aluminium alloy pressure receptacles*

(a) In addition to the initial inspection required by 6.2.1.5.1, it is necessary to test for possible intercrystalline corrosion of the inside wall of the pressure receptacles where use is made of an aluminium alloy containing copper, or where use is made of an aluminium alloy containing magnesium and manganese and the manganese content is greater than 3.5% or the manganese content lower than 0.5%;

(b) In the case of an aluminium/copper alloy the test shall be carried out by the manufacturer at the time of approval of a new alloy by the competent authority; it shall thereafter be repeated in the course of production, for each pour of the alloy;

(c) In the case of an aluminium/magnesium alloy the test shall be carried out by the manufacturer at the time of approval of a new alloy and of the manufacturing process by the competent authority. The test shall be repeated whenever a change is made in the composition of the alloy or in the manufacturing process.

6.2.1.6 ***Periodic inspection and test***

6.2.1.6.1 Refillable pressure receptacles shall be subjected to periodic inspections by a body approved by the competent authority of the country of approval [2], in accordance with the periodicities defined in the relevant packing instruction P200 or P203 in 4.1.4.1 and in accordance with the following specifications:

(a) External examination of the pressure receptacle, equipment and markings;

(b) Internal examination of the pressure receptacle (e.g. examination of the internal condition, verification of minimum wall thickness);

(c) Checking of the threads if the fittings are removed;

(d) The hydraulic pressure test and, if necessary, inspection of the characteristics of the material by suitable tests.

NOTE 1*: With the agreement of the testing and certifying body approved by the competent authority of the country of approval [2], the hydraulic pressure test may be replaced by a test using a gas, where such operation does not entail any danger, or by an equivalent method based on ultrasound.*

NOTE 2*: With the agreement of the testing and certifying body approved by the competent authority of the country of approval [2], the hydraulic pressure test of cylinders or tubes may be replaced by an equivalent method based on acoustic emission.*

NOTE 3*: With the agreement of the testing and certifying body approved by the competent authority of the country of approval [2], the hydraulic pressure test of each welded steel cylinder intended for the carriage of gases of UN No.1965, hydrocarbon gas mixture liquefied, n.o.s., with a capacity below 6,5 l may be replaced by another test ensuring an equivalent level of safety.*

6.2.1.6.2 For pressure receptacles intended for the carriage of UN No. 1001 acetylene, dissolved, and UN No. 3374 acetylene, solvent free, only the external condition (corrosion, deformation) and the condition of the porous mass (loosening, settlement) shall be required to be examined.

6.2.1.6.3 By derogation from 6.2.1.6.1 (d) closed cryogenic receptacles shall be inspected to verify external conditions, condition and operation of pressure relief devices and subjected to a leakproofness test. The leakproofness test shall be carried out with the gas contained in the pressure receptacle or with an inert gas. Checking shall be performed by means of a pressure gauge or by vacuum measurement. The thermal insulation need not be removed.

---

[2] *If the country of approval is not a contracting party to ADR, the competent authority of a contracting party to ADR.*

6.2.1.7 ***Marking of refillable pressure receptacles***

Refillable pressure receptacles shall be marked clearly and legibly with certification, operational and manufacturing marks. These marks shall be permanently affixed (e.g. stamped, engraved, or etched) on the pressure receptacle. The marks shall be on the shoulder, top end or neck of the pressure receptacle or on a permanently affixed component of the pressure receptacle (e.g. welded collar or corrosion resistant plate welded on the outer jacket of a closed cryogenic receptacle).

The minimum size of the marks shall be 5 mm for pressure receptacles with a diameter greater than or equal to 140 mm and 2.5 mm for pressure receptacles with a diameter less than 140 mm.

6.2.1.7.1 The following certification marks shall be applied:

(a) The technical standard used for design, construction and testing, as listed in the table under 6.2.2 or the approval number;

(b) The character(s) identifying the country of approval as indicated by the distinguishing signs of motor vehicles in international traffic;

(c) The identity mark or stamp of the inspection body that is registered with the competent authority of the country authorizing the marking;

(d) The date of the initial inspection, the year (four digits) followed by the month (two digits) separated by a slash (i.e. "/").

6.2.1.7.2 The following operational marks shall be applied:

(e) The test pressure in bar, preceded by the letters "PH" and followed by the letters "BAR";

(f) The mass of the empty pressure receptacle including all permanently attached integral parts (e.g. neck ring, foot ring, etc.) in kilograms, followed by the letters "KG". With the exception of pressure receptacles of UN No. 1965 hydrocarbon gas mixture, liquefied, n.o.s., this mass shall not include the mass of valve, valve cap or valve guard, any coating, or porous mass for acetylene. The mass shall be expressed to three significant figures rounded up to the last digit. For cylinders of less than 1 kg, the mass shall be expressed to two significant figures rounded up to the last digit;

(g) The minimum guaranteed wall thickness of the pressure receptacle in millimetres followed by the letters "MM". This mark is not required for pressure receptacles of UN No. 1965 hydrocarbon gas mixture, liquefied, n.o.s., nor for pressure receptacles with a water capacity less than or equal to 1 *l* or for composite cylinders or for closed cryogenic receptacles;

(h) In the case of pressure receptacles for compressed gases, UN No. 1001 acetylene, dissolved, and UN No. 3374 acetylene, solvent free, the working pressure in bar, preceded by the letters "PW". In the case of closed cryogenic receptacles, the maximum allowable working pressure preceded by the letters "MAWP";

(i) In the case of pressure receptacles for liquefied gases and refrigerated liquefied gases, the water capacity in litres expressed to three significant figures rounded down to the last digit, followed by the letter "L". If the value of the minimum or nominal water capacity is an integer, the digits after the decimal point may be neglected;

(j) In the case of pressure receptacles for UN No. 1001 acetylene, dissolved, the total of the mass of the empty receptacle, the fittings and accessories not removed during filling, the porous mass, the solvent and the saturation gas expressed to two significant figures rounded down to the last digit followed by the letters "KG";

(k) In the case of pressure receptacles for UN No. 3374 acetylene, solvent free, the total of the mass of the empty receptacle, the fittings and accessories not removed during filling and the porous mass expressed to two significant figures rounded down to the last digit followed by the letters "KG".

6.2.1.7.3 The following manufacturing marks shall be applied:

(l) Identification of the cylinder thread (e.g. 25E). This mark is not required for pressure receptacles of UN No. 1965 hydrocarbon gas mixture, liquefied, n.o.s. and for closed cryogenic receptacles;

(m) The manufacturer's mark registered by the competent authority. When the country of manufacture is not the same as the country of approval, then the manufacturer's mark shall be preceded by the character(s) identifying the country of manufacture as indicated by the distinguishing signs of motor vehicles in international traffic. The country mark and the manufacturer's mark shall be separated by a space or slash;

(n) The serial number assigned by the manufacturer;

(o) In the case of steel pressure receptacles and composite pressure receptacles with steel liner intended for the carriage of gases with a risk of hydrogen embrittlement, the letter "H" showing compatibility of the steel (see ISO 11114-1:1997).

6.2.1.7.4 The above marks shall be placed in three groups.

- Manufacturing marks shall be the top grouping and shall appear consecutively in the sequence given in 6.2.1.7.3.

- The operational marks in 6.2.1.7.2 shall be the middle grouping and the test pressure (e) shall be immediately preceded by the working pressure (h) when the latter is required.

- Certification marks shall be the bottom grouping and shall appear in the sequence given in 6.2.1.7.1.

6.2.1.7.5 Other marks are allowed in areas other than the side wall, provided they are made in low stress areas and are not of a size and depth that will create harmful stress concentrations. In the case of closed cryogenic receptacles, such marks may be on a separate plate attached to the outer jacket. Such marks shall not conflict with required marks.

6.2.1.7.6 In addition to the preceding marks, each refillable pressure receptacle that meets the periodic inspection and test requirements of 6.2.1.6 shall be marked indicating:

(a) The character(s) identifying the country authorizing the body performing the periodic inspection and test. This marking is not required if this body is approved by the competent authority of the country approving manufacture;

(b) The registered mark of the body authorized by the competent authority for performing periodic inspection and test;

(c) The date of the periodic inspection and test, the year (two digits) followed by the month (two digits) separated by a slash (i.e. "/"). Four digits may be used to indicate the year.

The above marks shall appear consecutively in the sequence given.

6.2.1.7.7 For acetylene cylinders, with the agreement of the competent authority, the date of the most recent periodic inspection and the stamp of the expert may be engraved on a ring affixed to the cylinder when the valve is installed and which is removable only by disconnecting the valve from the cylinder.

6.2.1.8 ***Marking of non-refillable pressure receptacles***

Non-refillable pressure receptacles shall be marked clearly and legibly with certification and gas or pressure receptacle specific marks. These marks shall be permanently affixed (e.g. stencilled, stamped, engraved, or etched) on the pressure receptacle. Except when stencilled, the marks shall be on the shoulder, top end or neck of the pressure receptacle or on a permanently affixed component of the pressure receptacle (e.g. welded collar). Except for the "DO NOT REFILL" mark, the minimum size of the marks shall be 5mm for pressure receptacles with a diameter greater than or equal to 140 mm and 2.5 mm for pressure receptacles with a diameter less than 140 mm. The minimum size of the "DO NOT REFILL" mark shall be 5 mm.

6.2.1.8.1 The marks listed in 6.2.1.7.1 to 6.2.1.7.3 shall be applied with the exception of (f), (g), and (l). The serial number (n) may be replaced by the batch number. In addition, the words "DO NOT REFILL" in letters of at least 5 mm in height are required.

6.2.1.8.2 The requirements of 6.2.1.7.4 shall apply.

NOTE*: Non-refillable pressure receptacles may, on account of their size, substitute this marking by a label.*

6.2.1.8.3 Other marks are allowed provided they are made in low stress areas other than the side wall and are not of a size and depth that will create harmful stress concentrations. Such marks shall not conflict with required marks.

6.2.2 Pressure receptacles designed, constructed and tested according to standards

The requirements of 6.2.1 are considered to have been complied with if the following standards, as relevant, are applied:

NOTE: *Persons or bodies identified in standards as having responsibilities in accordance with ADR shall meet the requirements of ADR.*

Reference	Title of document	Applicable sub-sections and paragraphs
for materials		
EN 1797:2001	Cryogenic vessels - Gas/material compatibility	6.2.1.2
EN ISO 11114-1:1997	Transportable gas cylinders - Compatibility of cylinder and valve materials with gas contents-Part 1: Metallic materials.	6.2.1.2
EN ISO 11114-2:2000	Transportable gas cylinders - Compatibility of cylinder and valve materials with gas contents-Part 2: Non-metallic materials.	6.2.1.2
for design and construction		
Annex I, Parts 1 to 3 to 84/525/EEC	Council directive on the approximation of the laws of the Member States relating to seamless steel gas cylinders.	6.2.1.1 and 6.2.1.5
Annex I, Parts 1 to 3 to 84/526/EEC	Council directive on the approximation of the laws of the Member States relating to seamless, unalloyed aluminium and aluminium alloy gas cylinders.	6.2.1.1 and 6.2.1.5
Annex I, Parts 1 to 3 to 84/527/EEC	Council directive on the approximation of the laws of the Member States relating to welded unalloyed steel gas cylinders.	6.2.1.1 and 6.2.1.5
EN 1442:1998	Transportable refillable welded steel cylinders for liquefied petroleum gas (LPG) - Design and construction.	6.2.1.1 and 6.2.1.5
EN 1800:1998/AC: 1999	Transportable gas cylinders - Acetylene cylinders - Basic requirements and definitions.	6.2.1.1.2
EN 1964-1:1999	Transportable gas cylinders – Specifications for the design and construction of refillable transportable seamless steel gas cylinders of capacity from 0.5 litres up to 150 litres – Part 1: Cylinders made of seamless steel with a Rm value of less than 1 100 MPa.	6.2.1.1 and 6.2.1.5
EN 1975:1999 + A1:2003	Transportable gas cylinders – Specifications for the design and construction of refillable transportable seamless aluminium and aluminium alloy gas cylinders of capacity from 0.5 litres up to 150 litres.	6.2.1.1 and 6.2.1.5
EN ISO 11120:1999	Gas cylinders – Refillable seamless steel tubes for compressed gas transport of water capacity between 150 litres and 3 000 litres – Design, construction and testing.	6.2.1.1 and 6.2.1.5
EN 1964-3: 2000	Transportable gas cylinders-Specifications for the design and construction of refillable transportable seamless steel gas cylinders of capacity from 0.5 litre up to 150 litres - Part 3: Cylinders made of stainless steel.	6.2.1.1 and 6.2.1.5
EN 12862: 2000	Transportable gas cylinders- Specifications for the design and construction of refillable transportable welded aluminium alloy gas cylinders.	6.2.1.1 and 6.2.1.5
EN 1251-2: 2000	Cryogenic vessels- Transportable, vacuum insulated, of not more than 1 000 litres volume- Part 2: Design, fabrication, inspection and testing	6.2.1.1 and 6.2.1.5
EN 12257:2002	Transportable gas cylinders – Seamless, hoop wrapped composite cylinders	6.2.1.1and 6.2.1.5
EN 12807:2001 (except Annex A)	Transportable refillable brazed steel cylinders for liquefied petroleum gas (LPG) – Design and construction	6.2.1.1and 6.2.1.5
EN 1964-2:2001	Transportable gas cylinders – Specification for the design and construction of refillable transportable seamless steel gas cylinders of water capacities from 0.5 litre up to and including 150 litre – Part 2: Cylinders made of seamless steel with a Rm ≥ 1100 MPa	6.2.1.1and 6.2.1.5

Reference	Title of document	Applicable sub-sections and paragraphs
EN 13293:2002	Transportable gas cylinders – Specification for the design and construction of refillable transportable seamless normalised carbon manganese steel gas cylinders of water capacity up to 0.5 litre for compressed, liquefied and dissolved gases and up to 1 litre for carbon dioxide	6.2.1.1and 6.2.1.5
EN 13322-1:2003	Transportable gas cylinders – Refillable welded steel gas cylinders – Design and construction – Part 1: Welded steel	6.2.1.1and 6.2.1.5
EN 13322-2:2003	Transportable gas cylinders – Refillable welded stainless steel gas cylinders – Design and construction – Part 2: Welded stainless steel	6.2.1.1and 6.2.1.5
EN 12245:2002	Transportable gas cylinders. Fully wrapped composite cylinders	6.2.1.1 and 6.2.1.5
EN 12205:2001	Transportable gas cylinders – Non refillable metallic gas cylinders	6.2.1.1, 6.2.1.5 and 6.2.1.7
EN 13110:2002	Transportable refillable welded aluminium cylinders for liquefied petroleum gas (LPG). Design and construction	6.2.1.1, 6.2.1.5 and 6.2.1.7
EN 14427:2004	Transportable refillable fully wrapped composite cylinders for liquefied petroleum gases - Design and construction ***NOTE:*** *This standard applies only to cylinders equipped with pressure relief valves.*	6.2.1.1, 6.2.1.5 and 2.1.7
EN 14208:2004	Transportable gas cylinders – Specification for welded pressure drums up to 1000 litres capacity for the transport of gases – Design and construction	6.2.1.1, 6.2.1.5 and 6.2.1.7
EN 14140:2003	Transportable refillable welded steel cylinders for Liquefied Petroleum Gas (LPG) – Alternative design and construction	6.2.1.1, 6.2.1.5 and 6.2.1.7
EN 13769:2003	Transportable gas cylinders – Cylinder bundles – Design, manufacture, identification and testing	6.2.1.1, 6.2.1.5 and 6.2.1.7
for closures		
EN 849:1996/A2:2001	Transportable gas cylinders - Cylinder valves: Specification and type testing	6.2.1.1
EN 13152:2001	Specifications and testing of LPG – cylinder valves – Self closing	6.2.1.1
EN 13153:2001	Specifications and testing of LPG – cylinder valves – Manually operated	6.2.1.1
for periodic inspection and test		
EN 1251-3: 2000	Cryogenic vessels – Transportable, vacuum insulated, of not more than 1 000 litres volume – Part 3: Operational requirements	6.2.1.6
EN 1968:2002 (except Annex B)	Transportable gas cylinders – Periodic inspection and testing of seamless steel gas cylinders	6.2.1.6
EN 1802:2002 (except Annex B)	Transportable gas cylinders – Periodic inspection and testing of seamless aluminium alloy gas cylinders	6.2.1.6
EN 12863:2002	Transportable gas cylinders – Periodic inspection and maintenance of dissolved acetylene cylinders ***NOTE:*** *In this standard "initial inspection" is to be understood as the "first periodic inspection" after final approval of a new acetylene cylinder.*	6.2.1.6
EN 1803:2002 (except Annex B)	Transportable gas cylinders – Periodic inspection and testing of welded steel gas cylinders	6.2.1.6
EN ISO 11623:2002 (except clause 4)	Transportable gas cylinders – Periodic inspection and testing of composite gas cylinders	6.2.1.6
EN 14189:2003	Transportable gas cylinders – Inspection and maintenance of cylinder valves at time of periodic inspection of gas cylinders	6.2.1.6

6.2.3 Requirements for pressure receptacles not designed, constructed and tested according to standards

Pressure receptacles not designed, constructed and tested according to standards listed in the table of 6.2.2 shall be designed, constructed and tested in accordance with the provisions of a technical code providing the same level of safety and recognised by the competent authority. The requirements of 6.2.1 and the following requirements however shall be met:

6.2.3.1 ***Metal cylinders, tubes, pressure drums and bundles of cylinders***

At the test pressure, the stress in the metal at the most severely stressed point of the pressure receptacle shall not exceed 77% of the guaranteed minimum yield stress (Re).

"Yield stress" means the stress at which a permanent elongation of 2 per thousand (i.e. 0.2%) or, for austenitic steels, 1% of the gauge length on the test-piece, has been produced.

NOTE: *In the case of sheet-metal the axis of the tensile test-piece shall be at right angles to the direction of rolling. The permanent elongation at fracture, shall be measured on a test-piece of circular cross-section in which the gauge length "l" is equal to five times the diameter "d" (l=5d); if test pieces of rectangular cross-section are used, the gauge length "l" shall be calculated by the formula:*

$$l = 5.65\sqrt{F_o}$$

where F_0 indicates the initial cross-sectional area of the test-piece.

Pressure receptacles and their closures shall be made of suitable materials which shall be resistant to brittle fracture and to stress corrosion cracking between –20 °C and +50 °C.

Welds shall be skilfully made and shall afford the fullest safety.

6.2.3.2 ***Additional provisions relating to aluminium-alloy pressure receptacles for compressed gases, liquefied gases, dissolved gases and non pressurized gases subject to special requirements (gas samples) as well as articles containing gas under pressure other than aerosol dispensers and small receptacles containing gas (gas cartridges)***

6.2.3.2.1 *The materials of aluminium-alloy pressure receptacles which are to be accepted shall satisfy the following requirements:*

	A	B	C	D
Tensile strength, Rm, in MPa (=N/mm^2)	49 to 186	196 to 372	196 to 372	343 to 490
Yield stress, Re, in MPa (=N/mm^2) (permanent set λg = 0.2%)	10 to 167	59 to 314	137 to 334	206 to 412
Permanent elongation at fracture (l = 5d) in per cent	12 to 40	12 to 30	12 to 30	11 to 16
Bend test (diameter of former d = n × e, where e is the thickness of the test piece)	n=5(Rm ≤ 98) n=6(Rm>98)	n=6(Rm ≤ 325) n=7(Rm >325)	n=6(Rm ≤ 325) n=7(Rm>325)	n=7(Rm ≤ 392) n=8(Rm>392)
Aluminium Association Series Number [a]	1 000	5 000	6 000	2 000

[a] *See "Aluminium Standards and Data", Fifth edition, January 1976, published by the Aluminium Association, 750 Third Avenue, New York.*

The actual properties will depend on the composition of the alloy concerned and on the final treatment of the pressure receptacle, but whatever alloy is used the thickness of the pressure receptacle shall be calculated by one of the following formulae:

$$e = \frac{P_{MPa}\ D}{\frac{2Re}{1.3} + P_{MPa}} \quad \text{or} \quad e = \frac{P_{bar}\ D}{\frac{20Re}{1.3} + P_{bar}}$$

where e = minimum thickness of pressure receptacle wall, in mm
P_{MPa} = test pressure, in MPa
P_{bar} = test pressure, in bar
D = nominal external diameter of the pressure receptacle, in mm; and
Re = guaranteed minimum proof stress with 0.2% proof stress, in MPa ($=N/mm^2$)

In addition, the value of the minimum guaranteed proof stress (Re) introduced into the formula is in no case to be greater than 0.85 times the guaranteed minimum tensile strength (Rm), whatever the type of alloy used.

NOTE 1: *The above characteristics are based on previous experience with the following materials used for pressure receptacles:*

Column A: *Aluminium, unalloyed, 99.5 g pure;*

Column B: *Alloys of aluminium and magnesium;*

Column C: *Alloys of aluminium, silicon and magnesium, such as ISO/R209-Al-Si-Mg (Aluminium Association 6351);*

Column D: *Alloys of aluminium, copper and magnesium.*

NOTE 2: *The permanent elongation at fracture is measured by means of test-pieces of circular cross-section in which the gauge length "l" is equal to five times the diameter "d" (l= 5d); if test-pieces of rectangular section are used the gauge length shall be calculated by the formula:*

$$l = 5.65\sqrt{F_o}$$

where F_o is the initial cross-section area of the test-piece.

NOTE 3: *(a)* *The bend test (see diagram) shall be carried out on specimens obtained by cutting into two equal parts of width 3e, but in no case less than 25 mm, an annular section of a cylinder. The specimens shall not be machined elsewhere than on the edges;*

(b) *The bend test shall be carried out between a mandrel of diameter (d) and two circular supports separated by a distance of (d + 3e).During the test the inner faces shall be separated by a distance not greater than the diameter of the mandrel;*

(c) *The specimen shall not exhibit cracks when it has been bent inwards around the mandrel until the inner faces are separated by a distance not greater than the diameter of the mandrel;*

(d) The ratio (n) between the diameter of the mandrel and the thickness of the specimen shall conform to the values given in the table.

Diagram of bend test

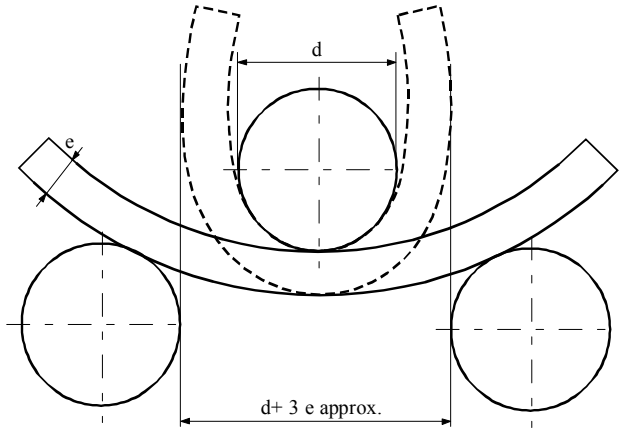

6.2.3.2.2 A lower minimum elongation value is acceptable on condition that an additional test approved by the competent authority of the country in which the pressure receptacles are made proves that safety of carriage is ensured to the same extent as in the case of pressure receptacles constructed to comply with the characteristics given in the table in 6.2.3.2.1 (see also EN 1975:1999 + A1:2003).

6.2.3.2.3 The wall thickness of the pressure receptacles at the thinnest point shall be the following:

- where the diameter of the pressure receptacle is less than 50 mm: not less than 1.5 mm;

- where the diameter of the pressure receptacle is from 50 to 150 mm: not less than 2 mm; and

- where the diameter of the pressure receptacle is more than 150 mm: not less than 3 mm.

6.2.3.2.4 The ends of the pressure receptacles shall have a semicircular, elliptical or "basket-handle" section; they shall afford the same degree of safety as the body of the pressure receptacle.

6.2.3.3 ***Pressure receptacles in composite materials***

For composite cylinders, tubes, pressure drums and bundles of cylinders which make use of composite materials i.e. comprising a liner hoop wrapped or fully wrapped with reinforcement material, the construction shall be such that a minimum burst ratio (burst pressure divided by test pressure) is:

- 1.67 for hoop wrapped pressure receptacles;

- 2.00 for fully wrapped pressure receptacles.

6.2.3.4 ***Closed cryogenic receptacles***

The following requirements apply to the construction of closed cryogenic receptacles for refrigerated liquefied gases:

6.2.3.4.1 If non-metallic materials are used, they shall resist brittle fracture at the lowest working temperature of the pressure receptacle and its fittings;

6.2.3.4.2 Pressure receptacles shall be fitted with a safety valve which shall be capable of opening at the working pressure shown on the pressure receptacle. The valves shall be so constructed as to work perfectly even at their lowest working temperature. Their reliability of functioning at that temperature shall be established and checked by testing each valve or a sample of valves of the same type of construction;

6.2.3.4.3 The vents and safety valves of pressure receptacles shall be so designed as to prevent the liquid from splashing out;

6.2.4 General requirements for aerosol dispensers and small receptacles containing gas (gas cartridges)

6.2.4.1 Design and construction

6.2.4.1.1 Aerosol dispensers (UN No.1950 aerosols) containing only a gas or a mixture of gases, and small receptacles containing gas (gas cartridges) (UN No. 2037), shall be made of metal. This requirement shall not apply to aerosols and small receptacles containing gas (gas cartridges) with a maximum capacity of 100 ml for UN No. 1011 butane. Other aerosol dispensers (UN No.1950 aerosols) shall be made of metal, synthetic material or glass. Receptacles made of metal and having an outside diameter of not less than 40 mm shall have a concave bottom.

6.2.4.1.2 The capacity of receptacles made of metal shall not exceed 1 000 ml; that of receptacles made of synthetic material or of glass shall not exceed 500 ml.

6.2.4.1.3 Each model of receptacles (aerosol dispensers or cartridges) shall, before being put into service, satisfy a hydraulic pressure test carried out in conformity with 6.2.4.2.

6.2.4.1.4 The release valves and dispersal devices of aerosol dispensers (UN No.1950 aerosols) and the valves of UN No. 2037 small receptacles containing gas (gas cartridges) shall ensure that the receptacles are so closed as to be leakproof and shall be protected against accidental opening. Valves and dispersal devices which close only by the action of the internal pressure are not to be accepted.

6.2.4.1.5 The internal pressure at 50 °C shall exceed neither two-thirds of the test pressure nor 1.32 MPa (13.2 bar). Aerosols dispensers and small receptacles containing gas (gas cartridges) shall be so filled that at 50°C the liquid phase does not exceed 95% of their capacity.

6.2.4.2 ***Hydraulic pressure test***

6.2.4.2.1 The internal pressure to be applied (test pressure) shall be 1.5 times the internal pressure at 50 °C, with a minimum pressure of 1 MPa (10 bar).

6.2.4.2.2 The hydraulic pressure tests shall be carried out on at least five empty receptacles of each model:

(a) until the prescribed test pressure is reached, by which time no leakage or visible permanent deformation shall have occurred; and

(b) until leakage or bursting occurs; the dished end, if any, shall yield first and the receptacle shall not leak or burst until a pressure 1.2 times the test pressure has been reached or passed.

6.2.4.3 Tightness (leakproofness) test

6.2.4.3.1 Each aerosol dispenser and small receptacle containing gas (gas cartridges) shall satisfy a tightness (leakproofness) test in a hot-water bath.

6.2.4.3.2 The temperature of the bath and the duration of the test shall be such that the internal pressure of each receptacle reaches at least 90% of the internal pressure that would be reached at 55°C. However, if the contents are sensitive to heat or if the receptacles are made of a plastics material which softens at this temperature, the temperature of the bath shall be from 20°C to 30°C. In addition, one receptacle out of every 2000 shall be tested at 55 °C.

6.2.4.3.3 No leakage or permanent deformation of a receptacle shall occur, except that a plastics receptacle may be deformed through softening provided that it does not leak.

6.2.4.4 ***Reference to standards***

The requirements of this section are deemed to be met if the following standards are complied with:

- for aerosol dispensers (UN No. 1950 aerosols): Annex to Council Directive 75/324/EEC [4] as amended by Commission Directive 94/1/EC [5];

- for UN No. 2037, small recipients containing gas (gas cartridges) containing UN No. 1965, hydrocarbon gas mixture n.o.s, liquefied: EN 417:2003 Non-refillable metallic gas cartridges for liquefied petroleum gases, with or without a valve, for use with portable appliances - Construction, inspection, testing and marking.

6.2.5 Requirements for UN pressure receptacles

In addition to the general requirements of 6.2.1.1, 6.2.1.2, 6.2.1.3, 6.2.1.5 and 6.2.1.6, UN pressure receptacles shall comply with the requirements of this section, including the standards, as applicable.

NOTE: *With the agreement of the competent authority, more recently published versions of the standards, if available, may be used.*

6.2.5.1 ***General requirements***

6.2.5.1.1 *Service equipment*

Except for pressure relief devices, valves, piping, fittings and other equipment subjected to pressure, shall be designed and constructed to withstand at least 1.5 times the test pressure of the pressure receptacles.

---

[4] *Council Directive 75/324/EEC of 20 May 1975 on the approximation of the laws of the Member States relating to aerosol dispensers, published in the Official Journal of the European Communities No. L 147 of 9.06.1975.*

[5] *Commission Directive 94/1/EC of January 1994, adapting some technicalities of Council Directive 75/324/EEC on the approximation of the laws of the relating Member States to aerosol dispensers published in the Official Journal of the European Communities No. L 23 of 28.01.1994.*

Service equipment shall be configured or designed to prevent damage that could result in the release of the pressure receptacle contents during normal conditions of handling and carriage. Manifold piping leading to shut-off valves shall be sufficiently flexible to protect the valves and the piping from shearing or releasing the pressure receptacle contents. The filling and discharge valves and any protective caps shall be capable of being secured against unintended opening. Valves shall be protected as specified in 4.1.6.8 (a) to (d) or pressure receptacles are carried in an outer packaging, which as prepared for carriage shall be capable of meeting the drop test specified in 6.1.5.3 for the packing group I performance level.

6.2.5.1.2 *Pressure relief devices*

Each pressure receptacle used for the carriage of UN No. 1013 carbon dioxide and UN No. 1070 nitrous oxide shall be equipped with pressure relief devices or, for other gases, as specified by the competent authority of the country of use, except when forbidden by packing instruction P200 in 4.1.4.1. The type of pressure relief device, the set-to-discharge pressure and relief capacity of pressure relief devices, if required, shall be specified by the competent authority of the country of use. Closed cryogenic receptacles shall be equipped with pressure relief devices in accordance with 6.2.1.3.3.4 and 6.2.1.3.3.5. Pressure-relief devices shall be designed to prevent the entry of foreign matter, the leakage of gas and the development of any dangerous excess pressure.

When fitted, pressure relief devices on manifolded horizontal pressure receptacles filled with flammable gas shall be arranged to discharge freely to the open air in such a manner as to prevent any impingement of escaping gas upon the pressure receptacle itself under normal conditions of carriage.

6.2.5.2 ***Design, construction and initial inspection and test***

6.2.5.2.1 The following standards apply for the design, construction, and initial inspection and test of UN cylinders, except that inspection requirements related to the conformity assessment system and approval shall be in accordance with 6.2.5.6:

ISO 9809-1:1999	Gas cylinders - Refillable seamless steel gas cylinders - Design, construction and testing - Part 1: Quenched and tempered steel cylinders with tensile strength less than 1100 MPa. ***NOTE:*** *The note concerning the F factor in section 7.3 of this standard shall not be applied for UN cylinders.*
ISO 9809-2:2000	Gas cylinders - Refillable seamless steel gas cylinders - Design, construction and testing - Part 2: Quenched and tempered steel cylinders with tensile strength greater than or equal to 1100 MPa.
ISO 9809-3:2000	Gas cylinders - Refillable seamless steel gas cylinders - Design, construction and testing - Part 3: Normalized steel cylinders.
ISO 7866:1999	Gas cylinders - Refillable seamless aluminium alloy gas cylinders - Design, construction and testing ***NOTE:*** *The note concerning the F factor in section 7.2 of this standard shall not be applied for UN cylinders.* *Aluminium alloy 6351A - T6 or equivalent shall not be authorized.*
ISO 11118:1999	Gas cylinders - Non-refillable metallic gas cylinders - Specification and test methods.
ISO 11119-1:2002	Gas cylinders of composite construction – Specification and test methods – Part 1: Hoop wrapped composite gas cylinders
ISO 11119-2:2002	Gas cylinders of composite construction – Specification and test methods – Part 2: Fully wrapped fibre reinforced composite gas cylinders with load-sharing metal liners

NOTE 1: *In the above referenced standards composite cylinders shall be designed for unlimited service life.*

NOTE 2: *After the first 15 years of service, composite cylinders manufactured according to these standards, may be approved for extended service by the competent authority which was responsible for the original approval of the cylinders and which will base its decision on the test information supplied by the manufacturer or owner or user.*

6.2.5.2.2 The following standards apply for the design, construction, and initial inspection and test of UN tubes, except that inspection requirements related to the conformity assessment system and approval shall be in accordance with 6.2.5.6:

ISO 11120:1999	Gas cylinders - Refillable seamless steel tubes for compressed gas transport, of water capacity between 150 *l* and 3000 *l* - Design, construction and testing. ***NOTE:*** *The note concerning the F factor in section 7.1 of this standard shall not be applied for UN tubes.*

6.2.5.2.3 The following standards apply for the design, construction and initial inspection and test of UN acetylene cylinders, except that inspection requirements related to the conformity assessment system and approval shall be in accordance with 6.2.5.6:

For the cylinder shell:

ISO 9809-1:1999	Gas cylinders - Refillable seamless steel gas cylinders - Design, construction and testing - Part 1: Quenched and tempered steel cylinders with tensile strength less than 1100 MPa. ***NOTE:*** *The note concerning the F factor in section 7.3 of this standard shall not be applied for UN cylinders.*
ISO 9809-3:2000	Gas cylinders - Refillable seamless steel gas cylinders - Design, construction and testing - Part 3: Normalized steel cylinders.
ISO 7866:1999	Gas cylinders - Refillable seamless aluminium alloy gas cylinders - Design, construction and testing. ***NOTE:*** *The note concerning the F factor in section 7.2 of this standard shall not be applied for UN cylinders.* *Aluminium alloy 6351A - T6 or equivalent shall not be authorized.*
ISO 11118:1999	Gas cylinders - Non-refillable metallic gas cylinders - Specification and test methods.

For the porous mass in the cylinder:

ISO 3807-1:2000	Cylinders for acetylene - Basic requirements - Part 1: Cylinders without fusible plugs.
ISO 3807-2:2000	Cylinders for acetylene - Basic requirements - Part 2: Cylinders with fusible plugs.

6.2.5.3 ***Materials***

In addition to the material requirements specified in the pressure receptacle design and construction standards, and any restrictions specified in the applicable packing instruction for the gas(es) to be carried (e.g. packing instruction P200), the following standards apply to material compatibility:

ISO 11114-1:1997	Transportable gas cylinders - Compatibility of cylinder and valve materials with gas contents - Part 1: Metallic materials.
ISO 11114-2:2000	Transportable gas cylinders - Compatibility of cylinder and valve materials with gas contents - Part 2: Non-metallic materials.

6.2.5.4 ***Service equipment***

The following standards apply to closures and their protection:

ISO 11117:1998	Gas cylinders - Valve protection caps and valve guards for industrial and medical gas cylinders - Design, construction and tests.
ISO 10297:1999	Gas cylinders - Refillable gas cylinder valves - Specification and type testing.

6.2.5.5 ***Periodic inspection and test***

The following standards apply to the periodic inspection and testing of UN cylinders:

ISO 6406:1992	Periodic inspection and testing of seamless steel gas cylinders
ISO 10461:1993	Seamless aluminium - alloy gas cylinders - Periodic inspection and testing.
ISO 10462:1994	Cylinders for dissolved acetylene - Periodic inspection and maintenance
ISO 11623:2002	Transportable gas cylinders – Periodic inspection and testing of composite gas cylinders

6.2.5.6 ***Conformity assessment system and approval for manufacture of pressure receptacles***

6.2.5.6.1 *Definitions*

For the purposes of this sub-section:

Conformity assessment system means a system for competent authority approval of a manufacturer, by pressure receptacle design type approval, approval of manufacturer's quality system and approval of inspection bodies;

Design type means a pressure receptacle design as specified by a particular pressure receptacle standard;

Verify means confirm by examination or provision of objective evidence that specified requirements have been fulfilled.

6.2.5.6.2 *General requirements*

Competent Authority

6.2.5.6.2.1 The competent authority that approves the pressure receptacle shall approve the conformity assessment system for the purpose of ensuring that pressure receptacles conform to the requirements of ADR. In instances where the competent authority that approves a pressure receptacle is not the competent authority in the country of manufacture, the marks of the approval country and the country of manufacture shall be indicated in the pressure receptacle marking (see 6.2.5.8 and 6.2.5.9).

The competent authority of the country of approval shall supply, upon request, evidence demonstrating compliance to this conformity assessment system to its counterpart in a country of use.

6.2.5.6.2.2 The competent authority may delegate its functions in this conformity assessment system in whole or in part.

6.2.5.6.2.3 The competent authority shall ensure that a current list of approved inspection bodies and their identity marks and approved manufacturers and their identity marks is available.

Inspection body

6.2.5.6.2.4 The inspection body shall be approved by the competent authority for the inspection of pressure receptacles and shall:

(a) have a staff with an organisational structure, capable, trained, competent, and skilled, to satisfactorily perform its technical functions;

(b) have access to suitable and adequate facilities and equipment;

(c) operate in an impartial manner and be free from any influence which could prevent it from doing so;

(d) ensure commercial confidentiality of the commercial and proprietary activities of the manufacturer and other bodies;

(e) maintain clear demarcation between actual inspection body functions and unrelated functions;

(f) operate a documented quality system;

(g) ensure that the tests and inspections specified in the relevant pressure receptacle standard and in the ADR are performed; and

(h) maintain an effective and appropriate report and record system in accordance with 6.2.5.6.6.

6.2.5.6.2.5 The inspection body shall perform design type approval, pressure receptacle production testing and inspection and certification to verify conformity with the relevant pressure receptacle standard (see 6.2.5.6.4 and 6.2.5.6.5).

Manufacturer

6.2.5.6.2.6 The manufacturer shall

(a) operate a documented quality system in accordance with 6.2.5.6.3;

(b) apply for design type approvals in accordance with 6.2.5.6.4;

(c) select an inspection body from the list of approved inspection bodies maintained by the competent authority in the country of approval; and

(d) maintain records in accordance with 6.2.5.6.6.

Testing laboratory

6.2.5.6.2.7 The testing laboratory shall have:

(a) staff with an organisational structure, sufficient in number, competence, and skill; and

(b) suitable and adequate facilities and equipment to perform the tests required by the manufacturing standard to the satisfaction of the inspection body.

6.2.5.6.3 *Manufacturer's quality system*

6.2.5.6.3.1 The quality system shall contain all the elements, requirements, and provisions adopted by the manufacturer. It shall be documented in a systematic and orderly manner in the form of written policies, procedures and instructions.
The contents shall in particular include adequate descriptions of:

(a) the organisational structure, responsibilities, and power of the management with regard to design and product quality;

(b) the design control and design verification techniques, processes, and systematic actions that will be used when designing the pressure receptacles;

(c) the relevant pressure receptacle manufacturing, quality control, quality assurance, and process operation instructions that will be used;

(d) quality records, such as inspection reports, test data, and calibration data;

(e) management reviews to ensure the effective operation of the quality system arising from the audits in accordance with 6.2.5.6.3.2;

(f) the process describing how customer requirements are met;

(g) the process for control of documents and their revision;

(h) the means for control of non-conforming pressure receptacles, purchased components, in-process and final materials; and

(i) training programmes and qualification procedures for relevant personnel.

6.2.5.6.3.2 Audit of the quality system

The quality system shall be initially assessed to determine whether it meets the requirements in 6.2.5.6.3.1 to the satisfaction of the competent authority.

The manufacturer shall be notified of the results of the audit. The notification shall contain the conclusions of the audit and any corrective actions required.

Periodic audits shall be carried out, to the satisfaction of the competent authority, to ensure that the manufacturer maintains and applies the quality system. Reports of the periodic audits shall be provided to the manufacturer.

6.2.5.6.3.3 Maintenance of the quality system

The manufacturer shall maintain the quality system as approved in order that it remains adequate and efficient.

The manufacturer shall notify the competent authority that approved the quality system, of any intended changes. The proposed changes shall be evaluated in order to determine whether the amended quality system will still satisfy the requirements in 6.2.5.6.3.1.

6.2.5.6.4 *Approval process*

Initial design type approval

6.2.5.6.4.1 The initial design type approval shall consist of approval of the manufacturer's quality system and approval of the pressure receptacle design to be produced. An application for an initial design type approval shall meet the requirements of 6.2.5.6.3, 6.2.5.6.4.2 to 6.2.5.6.4.6 and 6.2.5.6.4.9.

6.2.5.6.4.2 A manufacturer desiring to produce pressure receptacles in accordance with a pressure receptacle standard and with the ADR shall apply for, obtain, and retain a Design Type Approval Certificate issued by the competent authority in the country of approval for at least one pressure receptacle design type in accordance with the procedure given in 6.2.5.6.4.9. This certificate shall, on request, be submitted to the competent authority of the country of use.

6.2.5.6.4.3 An application shall be made for each manufacturing facility and shall include:

(a) the name and registered address of the manufacturer and in addition, if the application is submitted by an authorised representative, its name and address;

(b) the address of the manufacturing facility (if different from the above);

(c) the name and title of the person(s) responsible for the quality system;

(d) the designation of the pressure receptacle and the relevant pressure receptacle standard;

(e) details of any refusal of approval of a similar application by any other competent authority;

(f) the identity of the inspection body for design type approval;

(g) documentation on the manufacturing facility as specified under 6.2.5.6.3.1; and

(h) the technical documentation required for design type approval, which shall enable verification of the conformity of the pressure receptacles with the requirements of the relevant pressure receptacle design standard. The technical documentation shall cover the design and method of manufacture and shall contain, as far as is relevant for assessment, at least the following:

(i) pressure receptacle design standard, design and manufacturing drawings, showing components and subassemblies, if any;

(ii) descriptions and explanations necessary for the understanding of the drawings and intended use of the pressure receptacles;

(iii) a list of the standards necessary to fully define the manufacturing process;

(iv) design calculations and material specifications; and

(v) design type approval test reports, describing the results of examinations and tests carried out in accordance with 6.2.5.6.4.9.

6.2.5.6.4.4 An initial audit in accordance with 6.2.5.6.3.2 shall be performed to the satisfaction of the competent authority.

6.2.5.6.4.5 If the manufacturer is denied approval, the competent authority shall provide written detailed reasons for such denial.

6.2.5.6.4.6 Following approval, changes to the information submitted under 6.2.5.6.4.3 relating to the initial approval shall be provided to the competent authority.

Subsequent design type approvals

6.2.5.6.4.7 An application for a subsequent design type approval shall meet the requirements of 6.2.5.6.4.8 and 6.2.5.6.4.9, provided a manufacturer is in the possession of an initial design type approval. In such a case, the manufacturer's quality system according to 6.2.5.6.3 shall have been approved during the initial design type approval and shall be applicable for the new design.

6.2.5.6.4.8 The application shall include:

(a) the name and address of the manufacturer and in addition, if the application is submitted by an authorised representative, its name and address;

(b) details of any refusal of approval of a similar application by any other competent authority;

(c) evidence that initial design type approval has been granted; and

(d) the technical documentation, as described in 6.2.5.6.4.3 (h).

Procedure for design type approval

6.2.5.6.4.9 The inspection body shall:

(a) examine the technical documentation to verify that:

(i) the design is in accordance with the relevant provisions of the standard, and

(ii) the prototype lot has been manufactured in conformity with the technical documentation and is representative of the design;

(b) verify that the production inspections have been carried out as required in accordance with 6.2.5.6.5;

(c) select pressure receptacles from a prototype production lot and supervise the tests of these pressure receptacles as required for design type approval;

(d) perform or have performed the examinations and tests specified in the pressure receptacle standard to determine that:

(i) the standard has been applied and fulfilled, and

(ii) the procedures adopted by the manufacturer meet the requirements of the standard; and

(e) ensure that the various type approval examinations and tests are correctly and competently carried out.

After prototype testing has been carried out with satisfactory results and all applicable requirements of 6.2.5.6.4 have been satisfied, a design type approval certificate shall be issued which shall include the name and address of the manufacturer, results and conclusions of the examination, and the necessary data for identification of the design type.

If the manufacturer is denied a design type approval, the competent authority shall provide written detailed reasons for such denial.

6.2.5.6.4.10 Modifications to approved design types

The manufacturer shall inform the issuing competent authority of modifications to the approved design type as specified in the pressure receptacle standard. A subsequent design type approval shall be requested where such modifications constitute a new design according to the relevant pressure receptacle standard. This additional approval shall be given in the form of an amendment to the original Design Type Approval Certificate.

6.2.5.6.4.11 Upon request, the competent authority shall communicate to any other competent authority, information concerning design type approval, modifications of approvals, and withdrawn approvals.

6.2.5.6.5 *Production inspection and certification*

An inspection body, or its delegate, shall carry out the inspection and certification of each pressure receptacle. The inspection body selected by the manufacturer for inspection and testing during production may be different from the inspection body used for the design type approval testing.

Where it can be demonstrated to the satisfaction of the inspection body that the manufacturer has trained and competent inspectors, independent of the manufacturing operations, inspection may be performed by those inspectors. In such a case, the manufacturer shall maintain training records of the inspectors.

The inspection body shall verify that the inspections by the manufacturer and tests performed on those pressure receptacles, fully conform to the standard and the requirements of ADR. Should non-conformance in conjunction with this inspection and testing be determined, the permission to have inspection performed by the manufacturer's inspectors may be withdrawn.

The manufacturer shall, after approval by the inspection body, make a declaration of conformity with the certified design type. The application of the pressure receptacle certification marking shall be considered a declaration that the pressure receptacle complies with the applicable pressure receptacle standards and the requirements of this conformity assessment system and ADR. The inspection body shall affix or delegate the manufacturer to affix the pressure receptacle certification marking and the registered mark of the inspection body to each approved pressure receptacle.

A certificate of compliance, signed by the inspection body and the manufacturer, shall be issued before the pressure receptacles are filled.

6.2.5.6.6 *Records*

Design type approval and certificate of compliance records shall be retained by the manufacturer and the inspection body for not less than 20 years.

6.2.5.7 Approval system for periodic inspection and test of pressure receptacles

6.2.5.7.1 *Definition*

For the purposes of this section:

"Approval system" means a system for competent authority approval of a body performing periodic inspection and test of pressure receptacles (hereinafter referred to as "periodic inspection and test body"), including approval of that body's quality system.

6.2.5.7.2 *General requirements*

Competent authority

6.2.5.7.2.1 The competent authority shall establish an approval system for the purpose of ensuring that the periodic inspection and test of pressure receptacles conform to the requirements of ADR. In instances where the competent authority that approves a body performing periodic inspection and test of a pressure receptacle is not the competent authority of the country approving the manufacture of the pressure receptacle, the marks of the approval country of periodic inspection and test shall be indicated in the pressure receptacle marking (see 6.2.5.8).

The competent authority of the country of approval for the periodic inspection and test shall supply, upon request, evidence demonstrating compliance to this approval system including the records of the periodic inspection and test to its counterpart in a country of use.

The competent authority of the country of approval may terminate the approval certificate referred to in 6.2.5.7.4.1, upon evidence demonstrating non-compliance with the approval system.

6.2.5.7.2.2 The competent authority may delegate its functions in this approval system, in whole or in part.

6.2.5.7.2.3 The competent authority shall ensure that a current list of approved periodic inspection and test bodies and their identity marks is available.

Periodic inspection and test body

6.2.5.7.2.4 The periodic inspection and test body shall be approved by the competent authority and shall:

(a) have a staff with an organizational structure, capable, trained, competent, and skilled, to satisfactorily perform its technical functions;

(b) have access to suitable and adequate facilities and equipment;

(c) operate in an impartial manner and be free from any influence which could prevent it from doing so;

(d) ensure commercial confidentiality;

(e) maintain clear demarcation between actual periodic inspection and test body functions and unrelated functions;

(f) operate a documented quality system in accordance with 6.2.5.7.3;

(g) apply for approval in accordance with 6.2.5.7.4;

(h) ensure that the periodic inspections and tests are performed in accordance with 6.2.5.7.5; and

(i) maintain an effective and appropriate report and record system in accordance with 6.2.5.7.6.

6.2.5.7.3 *Quality system and audit of the periodic inspection and test body*

6.2.5.7.3.1 Quality system

The quality system shall contain all the elements, requirements, and provisions adopted by the periodic inspection and test body. It shall be documented in a systematic and orderly manner in the form of written policies, procedures, and instructions.

The quality system shall include:

(a) a description of the organizational structure and responsibilities;

(b) the relevant inspection and test, quality control, quality assurance, and process operation instructions that will be used;

(c) quality records, such as inspection reports, test data, calibration data and certificates;

(d) management reviews to ensure the effective operation of the quality system arising from the audits performed in accordance with 6.2.5.7.3.2;

(e) a process for control of documents and their revision;

(f) a means for control of non-conforming pressure receptacles; and

(g) training programmes and qualification procedures for relevant personnel.

6.2.5.7.3.2 Audit

The periodic inspection and test body and its quality system shall be audited in order to determine whether it meets the requirements of ADR to the satisfaction of the competent authority.

An audit shall be conducted as part of the initial approval process (see 6.2.5.7.4.3). An audit may be required as part of the process to modify an approval (see 6.2.5.7.4.6).

Periodic audits shall be conducted, to the satisfaction of the competent authority, to ensure that the periodic inspection and test body continues to meet the requirements of ADR.

The periodic inspection and test body shall be notified of the results of any audit. The notification shall contain the conclusions of the audit and any corrective actions required.

6.2.5.7.3.3 Maintenance of the quality system

The periodic inspection and test body shall maintain the quality system, as approved, in order that it remains adequate and efficient.

The periodic inspection and test body shall notify the competent authority that approved the quality system of any intended changes, in accordance with the process for modification of an approval in 6.2.5.7.4.6.

6.2.5.7.4 *Approval process for periodic inspection and test bodies*

Initial approval

6.2.5.7.4.1 A body desiring to perform periodic inspection and test of pressure receptacles in accordance with a pressure receptacle standard and ADR shall apply for, obtain, and retain an Approval Certificate issued by the competent authority.

This written approval shall, on request, be submitted to the competent authority of a country of use.

6.2.5.7.4.2 An application shall be made for each periodic inspection and test body and shall include:

(a) the name and address of the periodic inspection and test body and, if the application is submitted by an authorized representative, its name and address;

(b) the address of each facility performing periodic inspection and test;

(c) the name and title of the person(s) responsible for the quality system;

(d) the designation of the pressure receptacles, the periodic inspection and test methods, and the relevant pressure receptacle standards met by the quality system;

(e) documentation on each facility, the equipment, and the quality system as specified under 6.2.5.7.3.1;

(f) the qualifications and training records of the periodic inspection and test personnel; and

(g) details of any refusal of approval of a similar application by any other competent authority.

6.2.5.7.4.3 The competent authority shall:

(a) examine the documentation to verify that the procedures are in accordance with the requirements of the relevant pressure receptacle standards and ADR; and

(b) conduct an audit in accordance with 6.2.5.7.3.2 to verify that the inspections and tests are carried out as required by the relevant pressure receptacle standards and ADR, to the satisfaction of the competent authority.

6.2.5.7.4.4 After the audit has been carried out with satisfactory results and all applicable requirements of 6.2.5.7.4 have been satisfied, an approval certificate shall be issued. It shall include the name of the periodic inspection and test body, the registered mark, the address of each facility, and the necessary data for identification of its approved activities (e.g. designation of pressure receptacles, periodic inspection and test method and pressure receptacle standards).

6.2.5.7.4.5 If the periodic inspection and test body is denied approval, the competent authority shall provide written detailed reasons for such denial.

Modifications to periodic inspection and test body approvals

6.2.5.7.4.6 Following approval, the periodic inspection and test body shall notify the issuing competent authority of any modifications to the information submitted under 6.2.5.7.4.2 relating to the initial approval. The modifications shall be evaluated in order to determine whether the requirements of the relevant pressure receptacle standards and ADR will be satisfied. An audit in accordance with 6.2.5.7.3.2 may be required. The competent authority shall accept or reject these modifications in writing, and an amended approval certificate shall be issued as necessary.

6.2.5.7.4.7 Upon request, the competent authority shall communicate to any other competent authority, information concerning initial approvals, modifications of approvals, and withdrawn approvals.

6.2.5.7.5 *Periodic inspection and test and certification*

The application of the periodic inspection and test marking to a pressure receptacle shall be considered a declaration that the pressure receptacle complies with the applicable pressure receptacle standards and the requirements of ADR. The periodic inspection and test body shall affix the periodic inspection and test marking, including its registered mark, to each approved pressure receptacle (see 6.2.5.8.7).

A record certifying that a pressure receptacle has passed the periodic inspection and test shall be issued by the periodic inspection and test body, before the pressure receptacle is filled.

6.2.5.7.6 *Records*

The periodic inspection and test body shall retain records of pressure receptacle periodic inspection and tests (both passed and failed) including the location of the test facility, for not less than 15 years.

The owner of the pressure receptacle shall retain an identical record until the next periodic inspection and test unless the pressure receptacle is permanently removed from service.

6.2.5.8 ***Marking of refillable UN pressure receptacles***

Refillable UN pressure receptacles shall be marked clearly and legibly with certification, operational and manufacturing marks. These marks shall be permanently affixed (e.g. stamped, engraved, or etched) on the pressure receptacle. The marks shall be on the shoulder, top end or neck of the pressure receptacle or on a permanently affixed component of the pressure receptacle (e.g. welded collar or corrosion resistant plate welded on the outer jacket of a closed cryogenic receptacle). Except for the UN packaging symbol, the minimum size of the marks shall be 5 mm for pressure receptacles with a diameter greater than or equal to 140 mm and 2.5 mm for pressure receptacles with a diameter less than 140 mm. The minimum size of the UN packaging symbol shall be 10 mm for pressure receptacles with a diameter greater than or equal to 140 mm and 5 mm for pressure receptacles with a diameter less than 140 mm.

6.2.5.8.1 The following certification marks shall be applied:

(a) The UN packaging symbol

This symbol shall only be marked on pressure receptacles which conform to the requirements of ADR for UN pressure receptacles;

(b) The technical standard (e.g. ISO 9809-1) used for design, construction and testing;

(c) The character(s) identifying the country of approval as indicated by the distinguishing signs of motor vehicles in international traffic;

(d) The identity mark or stamp of the inspection body that is registered with the competent authority of the country authorizing the marking;

(e) The date of the initial inspection, the year (four digits) followed by the month (two digits) separated by a slash (i.e. "/").

6.2.5.8.2 The following operational marks shall be applied:

(f) The test pressure in bar, preceded by the letters "PH" and followed by the letters "BAR";

(g) The mass of the empty pressure receptacle including all permanently attached integral parts (e.g. neck ring, foot ring, etc.) in kilograms, followed by the letters "KG". This mass shall not include the mass of valve, valve cap or valve guard, any coating, or porous mass for acetylene. The mass shall be expressed to three significant figures rounded up to the last digit. For cylinders of less than 1 kg, the mass shall be expressed to two significant figures rounded up to the last digit;

(h) The minimum guaranteed wall thickness of the pressure receptacle in millimetres followed by the letters "MM". This mark is not required for pressure receptacles with a water capacity less than or equal to 1 *l* or for composite cylinders or for closed cryogenic receptacles;

(i) In the case of pressure receptacles for compressed gases, UN No. 1001 acetylene, dissolved, and UN No. 3374 acetylene, solvent free, the working pressure in bar, preceded by the letters "PW". In the case of closed cryogenic receptacles, the maximum allowable working pressure preceded by the letters "MAWP";

(j) In the case of pressure receptacles for liquefied gases and refrigerated liquefied gases, the water capacity in litres expressed to three significant figures rounded down to the last digit, followed by the letter "L". If the value of the minimum or nominal water capacity is an integer, the digits after the decimal point may be neglected;

(k) In the case of pressure receptacles for UN No. 1001 acetylene, dissolved, the total of the mass of the empty pressure receptacle, the fittings and accessories not removed during filling, the porous mass, the solvent and the saturation gas expressed to two significant figures rounded down to the last digit followed by the letters "KG";

(l) In the case of pressure receptacles for UN No. 3374 acetylene, solvent free, the total of the mass of the empty pressure receptacle, the fittings and accessories not removed during filling and the porous mass expressed to two significant figures rounded down to the last digit followed by the letters "KG".

6.2.5.8.3 The following manufacturing marks shall be applied:

(m) Identification of the cylinder thread (e.g. 25E). This mark is not required for closed cryogenic receptacles;

(n) The manufacturer's mark registered by the competent authority. When the country of manufacture is not the same as the country of approval, then the manufacturer's mark shall be preceded by the character(s) identifying the country of manufacture as indicated by the distinguishing signs of motor vehicles in international traffic. The country mark and the manufacturer's mark shall be separated by a space or slash;

(o) The serial number assigned by the manufacturer;

(p) In the case of steel pressure receptacles and composite pressure receptacles with steel liner intended for the carriage of gases with a risk of hydrogen embrittlement, the letter "H" showing compatibility of the steel (see 1SO 11114-1:1997).

6.2.5.8.4 The above marks shall be placed in three groups.

- Manufacturing marks shall be the top grouping and shall appear consecutively in the sequence given in 6.2.5.8.3.

- The operational marks in 6.2.5.8.2 shall be the middle grouping and the test pressure (f) shall be immediately preceded by the working pressure (i) when the latter is required.

- Certification marks shall be the bottom grouping and shall appear in the sequence given in 6.2.5.8.1.

The following is an example of the markings applied to a cylinder:

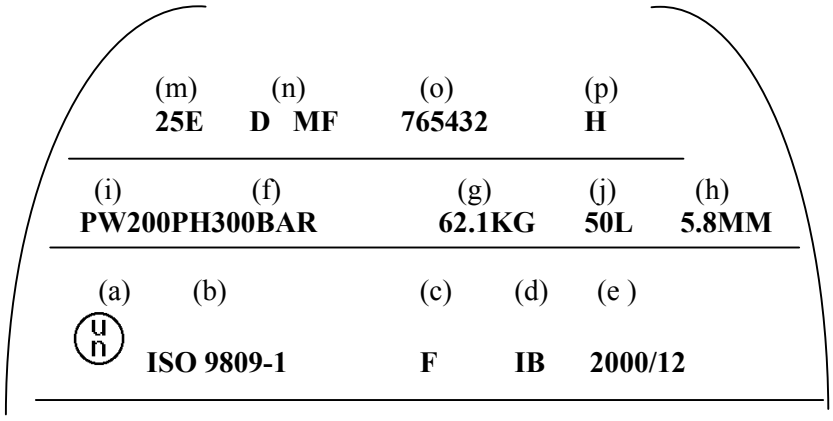

6.2.5.8.5 Other marks are allowed in areas other than the side wall, provided they are made in low stress areas and are not of a size and depth that will create harmful stress concentrations. In the case of closed cryogenic receptacles, such marks may be on a separate plate attached to the outer jacket. Such marks shall not conflict with required marks.

6.2.5.8.6 In addition to the preceding marks, each refillable pressure receptacle that meets the periodic inspection and test requirements of 6.2.5.5 shall be marked indicating:

(a) The character(s) identifying the country authorizing the body performing the periodic inspection and test. This marking is not required if this body is approved by the competent authority of the country approving manufacture;

(b) The registered mark of the body authorized by the competent authority for performing periodic inspection and test;

(c) The date of the periodic inspection and test, the year (two digits) followed by the month (two digits) separated by a slash (i.e. "/"). Four digits may be used to indicate the year.

The above marks shall appear consecutively in the sequence given.

6.2.5.9 ***Marking of non-refillable UN pressure receptacles***

Non-refillable UN pressure receptacles shall be marked clearly and legibly with certification and gas or pressure receptacle specific marks. These marks shall be permanently affixed (e.g. stencilled, stamped, engraved, or etched) on the pressure receptacle. Except when stencilled, the marks shall be on the shoulder, top end or neck of the pressure receptacle or on a permanently affixed component of the pressure receptacle (e.g. welded collar). Except for

the "UN packaging symbol and the "DO NOT REFILL" mark, the minimum size of the marks shall be 5 mm for pressure receptacles with a diameter greater than or equal to 140 mm and 2.5 mm for pressure receptacles with a diameter less than 140 mm.

The minimum size of the UN packaging symbol shall be 10 mm for pressure receptacles with a diameter greater than or equal to 140 mm and 5 mm for pressure receptacles with a diameter less than 140 mm.

The minimum size of the "DO NOT REFILL" mark shall be 5 mm.

6.2.5.9.1 The marks listed in 6.2.5.8.1 to 6.2.5.8.3 shall be applied with the exception of (g), (h), and (m). The serial number (o) may be replaced by the batch number. In addition, the words "DO NOT REFILL" in letters of at least 5 mm in height are required.

6.2.5.9.2 The requirements of 6.2.5.8.4 shall apply.

NOTE: *Non-refillable pressure receptacles may, on account of their size, substitute this marking by a label.*

6.2.5.9.3 Other marks are allowed provided they are made in low stress areas other than the side wall and are not of a size and depth that will create harmful stress concentrations. Such marks shall not conflict with required marks.

CHAPTER 6.3

REQUIREMENTS FOR THE CONSTRUCTION AND TESTING OF PACKAGINGS FOR CLASS 6.2 SUBSTANCES

NOTE: *The requirements of this Chapter don't apply to packagings used for the carriage of Class 6.2 substances according to packing instruction P621 of 4.1.4.1.*

6.3.1 General

6.3.1.1 A packaging that meets the requirements of this section and of 6.3.2 shall be marked with:

(a) the United Nations packaging symbol;

(b) the code designating the type of packaging according to the requirements of 6.1.2;

(c) the text "CLASS 6.2";

(d) the last two digits of the year of manufacture of the packaging;

(e) the state authorizing the allocation of the mark, indicated by the distinguishing sign for motor vehicles in international traffic [1];

(f) the name of the manufacturer or other identification of the packaging specified by the competent authority;

(g) for packagings meeting the requirements of 6.3.2.9, the letter "U", inserted immediately following the marking required in (b) above.

Each element of the marking applied in accordance with (a) to (g) shall be clearly separated, e.g. by a slash or space, so as to be easily identifiable.

6.3.1.2 ***Example of marking***

	4G/CLASS 6.2/01	as in 6.3.1.1 (a), (b), (c) and (d)
	S/SP-9989-ERIKSSON	as in 6.3.1.1 (e), (f)

6.3.1.3 Manufacturers and subsequent distributors of packagings shall provide information regarding procedures to be followed and a description of the types and dimensions of closures (including required gaskets) and any other components needed to ensure that packages as presented for carriage are capable of passing the applicable performance tests of this Chapter.

6.3.2 Test requirements for packagings

6.3.2.1 Other than for packagings for live animals and organisms, samples of each packaging shall be prepared for testing as described in 6.3.2.2 and then subjected to the tests in 6.3.2.4 to 6.3.2.6. If the nature of the packaging makes it necessary, equivalent preparation and tests are permitted, provided that these may be demonstrated to be at least as effective.

---

[1] *Distinguishing sign for motor vehicles in international traffic prescribed in Vienna Convention on Road Traffic (1968).*

6.3.2.2 Samples of each packaging shall be prepared as for carriage, except that a liquid or solid infectious substance shall be replaced by water or, where conditioning at –18 °C is specified, by water/antifreeze. Each primary receptacle shall be filled to 98% capacity.

6.3.2.3 ***Tests required***

Material of					Tests required				
outer packaging			inner packaging		Refer to 6.3.2.5				Refer to 6.3.2.6
Fibre-board	Plastics	Other	Plastics	Other	(a)	(b)	(c)	(d)	
X			X			X	X	when dry ice is used	X
X				X		X			X
	X		X				X		X
	X			X			X		X
		X	X				X		X
		X		X	X				X

6.3.2.4 Packagings prepared as for carriage shall be subjected to the tests in 6.3.2.3, which - for test purposes - categorizes packagings according to their material characteristics. For outer packagings, the headings in the table relate to fibreboard or similar materials whose performance may be rapidly affected by moisture; plastics which may embrittle at low temperature; and other materials such as metal whose performance is not affected by moisture or temperature. If a primary receptacle and a secondary packaging are made of different materials, the material of the primary receptacle determines the appropriate test. In instances where a primary receptacle is made of two materials, the material most liable to damage shall determine the appropriate tests.

6.3.2.5 (a) Samples shall be subjected to free-fall drops on to a rigid, non-resilient, flat, horizontal surface from a height of 9 m. Where the samples are in the shape of a box, five shall be dropped in sequence:

(i) one flat on to the base,

(ii) one flat on to the top,

(iii) one flat on to the long side,

(iv) one flat on to the short side,

(v) one on to a corner.

Where the samples are in the shape of a drum, three shall be dropped in sequence:

(vi) one diagonally on to the top chime, with the centre of gravity directly above the point of impact,

(vii) one diagonally on to the base chime,

(viii) one flat on to the side.

Following the appropriate drop sequence, there shall be no leakage from the primary receptacle(s) which shall remain protected by absorbent material in the secondary packaging;

NOTE: *While the sample shall be released in the required orientation, it is accepted that for aerodynamic reasons the impact may not take place in that orientation.*

(b) The samples shall be subjected to a water spray that simulates exposure to rainfall of approximately 5 cm per hour for at least one hour. It shall then be subjected to the test described in (a);

(c) The samples shall be conditioned in an atmosphere of -18 °C or less for a period of at least 24 hours and within 15 minutes of removal from that atmosphere be subjected to the test described in (a). Where the samples contain dry ice, the conditioning period may be reduced to 4 hours;

(d) Where the packaging is intended to contain dry ice, a test additional to that specified in (a) or (b) or (c) shall be carried out. One sample shall be stored so that all the dry ice dissipates and then be subjected to the test described in (a).

6.3.2.6 Packagings with a gross mass of 7 kg or less shall be subjected to the tests described in (a) below and packagings with a gross mass exceeding 7 kg to the tests in (b) below.

(a) Samples shall be placed on a level hard surface. A cylindrical steel rod with a mass of at least 7 kg, a diameter not exceeding 38 mm and whose impact end edges have a radius not exceeding 6 mm, shall be dropped in a vertical free fall from a height of 1 m, measured from the impact end to the impact surface of the sample. One sample shall be placed on its base. A second sample shall be placed in an orientation perpendicular to that used for the first. In each instance the steel rod shall be aimed to impact the primary receptacle. Following each impact, penetration of the secondary packaging is acceptable, provided that there is no leakage from the primary receptacle(s);

(b) Samples shall be dropped on to the end of a cylindrical steel rod. The rod shall be set vertically in a level hard surface. It shall have a diameter of 38 mm and the edges of the upper end a radius not exceeding 6 mm. The rod shall protrude from the surface a distance at least equal to that between the primary receptacle(s) and the outer surface of the outer packaging with a minimum of 200 mm. One sample shall be dropped in a vertical free fall from a height of 1 m, measured from the top of the steel rod. A second sample shall be dropped from the same height in an orientation perpendicular to that used for the first. In each instance, the packaging shall be so orientated that the steel rod could penetrate the primary receptacle(s). Following each impact, there shall be no leakage from the primary receptacle(s).

6.3.2.7 The competent authority may permit the selective testing of packagings that differ only in minor respects from a tested type, e.g. smaller sizes of inner packagings or inner packagings of lower net mass; and packagings such as drums, bags and boxes which are produced with small reductions in external dimension(s).

6.3.2.8 Provided an equivalent level of performance is maintained, the following variations in the primary receptacles placed within a secondary packaging are allowed without the need for further testing of the completed packaging:

(a) Primary receptacles of equivalent or smaller size as compared to the tested primary receptacles may be used provided:

(i) the primary receptacles are of similar design to the primary receptacle tested (e.g. shape: round, rectangular, etc.);

(ii) the material of construction of the primary receptacles (e.g. glass, plastics, metal) offers resistance to impact and stacking forces equivalent to or better than that of the primary receptacles originally tested;

(iii) the primary receptacles have the same or smaller openings and the closure is of equivalent design (e.g. screw cap, friction lid, etc.);

(iv) sufficient additional cushioning material is used to take up empty spaces and to prevent significant movement of the primary receptacles; and

(v) primary receptacles are oriented within the secondary packagings in the same manner as in the tested package;

(b) A lesser number of the tested primary receptacles, or of the alternative types of primary receptacles identified in (a) above, may be used provided sufficient cushioning is added to fill the void space(s) and to prevent significant movement of the primary receptacles.

6.3.2.9 Inner receptacles of any type may be assembled within an intermediate (secondary) packaging and carried without testing in the outer packaging under the following conditions:

(a) The intermediate/outer packaging combination shall have been successfully tested in accordance with 6.3.2.3 with fragile (e.g. glass) inner receptacles;

(b) The total combined gross mass of inner receptacles shall not exceed one half the gross mass of inner receptacles used for the drop test in (a) above;

(c) The thickness of cushioning between inner receptacles and between inner receptacles and the outside of the intermediate packaging shall not be reduced below the corresponding thicknesses in the originally tested packaging; and if a single inner receptacle was used in the original test, the thickness of cushioning between inner receptacles shall not be less than the thickness of cushioning between the outside of the intermediate packaging and the inner receptacle in the original test. When either fewer or smaller inner receptacles are used (as compared to the inner receptacles used in the drop test), sufficient additional cushioning material shall be used to take up the void;

(d) The outer packaging shall have successfully passed the stacking test in 6.1.5.6 while empty. The total mass of identical packages shall be based on the combined mass of inner receptacles used in the drop test in (a) above;

(e) For inner receptacles containing liquids, an adequate quantity of absorbent material to absorb the entire liquid content of the inner receptacles shall be present;

(f) If the outer packaging is intended to contain inner receptacles for liquids and is not leakproof, or is intended to contain inner receptacles for solids and is not siftproof, a means of containing any liquid or solid contents in the event of leakage shall be provided in the form of a leakproof liner, plastics bag or other equally effective means of containment;

(g) In addition to the markings prescribed in 6.3.1.1(a) to (f), packagings shall be marked in accordance with 6.3.1.1 (g).

6.3.3 Test report

6.3.3.1 A test report containing at least the following particulars shall be drawn up and shall be available to the users of the packaging:

1. Name and address of the test facility;
2. Name and address of applicant (where appropriate);
3. A unique test report identification;
4. Date of the test report;
5. Manufacturer of the packaging;
6. Description of the packaging design type (e.g. dimensions, materials, closures, thickness, etc.), including method of manufacture (e.g. blow moulding) and which may include drawing(s) and/or photograph(s);
7. Maximum capacity;
8. Characteristics of test contents, e.g. viscosity and relative density for liquids and particle size for solids;
9. Test descriptions and results;
10. The test report shall be signed with the name and status of the signatory.

6.3.3.2 The test report shall contain statements that the packaging prepared as for carriage was tested in accordance with the appropriate requirements of this Chapter and that the use of other packaging methods or components may render it invalid. A copy of the test report shall be available to the competent authority.

CHAPTER 6.4

REQUIREMENTS FOR THE CONSTRUCTION, TESTING AND APPROVAL OF PACKAGES AND MATERIAL OF CLASS 7

6.4.1 ***(Reserved)***

6.4.2 General requirements

6.4.2.1 The package shall be so designed in relation to its mass, volume and shape that it can be easily and safely carried. In addition, the package shall be so designed that it can be properly secured in or on the vehicle during carriage.

6.4.2.2 The design shall be such that any lifting attachments on the package will not fail when used in the intended manner and that, if failure of the attachments should occur, the ability of the package to meet other requirements of this Annex would not be impaired. The design shall take account of appropriate safety factors to cover snatch lifting.

6.4.2.3 Attachments and any other features on the outer surface of the package which could be used to lift it shall be designed either to support its mass in accordance with the requirements of 6.4.2.2 or shall be removable or otherwise rendered incapable of being used during carriage.

6.4.2.4 As far as practicable, the packaging shall be so designed and finished that the external surfaces are free from protruding features and can be easily decontaminated.

6.4.2.5 As far as practicable, the outer layer of the package shall be so designed as to prevent the collection and the retention of water.

6.4.2.6 Any features added to the package at the time of carriage which are not part of the package shall not reduce its safety.

6.4.2.7 The package shall be capable of withstanding the effects of any acceleration, vibration or vibration resonance which may arise under routine conditions of carriage without any deterioration in the effectiveness of the closing devices on the various receptacles or in the integrity of the package as a whole. In particular, nuts, bolts and other securing devices shall be so designed as to prevent them from becoming loose or being released unintentionally, even after repeated use.

6.4.2.8 The materials of the packaging and any components or structures shall be physically and chemically compatible with each other and with the radioactive contents. Account shall be taken of their behaviour under irradiation.

6.4.2.9 All valves through which the radioactive contents could otherwise escape shall be protected against unauthorized operation.

6.4.2.10 The design of the package shall take into account ambient temperatures and pressures that are likely to be encountered in routine conditions of carriage.

6.4.2.11 For radioactive material having other dangerous properties the package design shall take into account those properties; see 2.1.3.5.3 and 4.1.9.1.5.

6.4.2.12 Manufacturers and subsequent distributors of packagings shall provide information regarding procedures to be followed and a description of the types and dimensions of closures (including required gaskets) and any other components needed to ensure that packages as presented for carriage are capable of passing the applicable performance tests of this Chapter.

6.4.3 ***(Reserved)***

6.4.4 Requirements for excepted packages

An excepted package shall be designed to meet the requirements specified in 6.4.2.

6.4.5 Requirements for Industrial packages

6.4.5.1 Types IP-1, IP-2, and IP-3 packages shall meet the requirements specified in 6.4.2 and 6.4.7.2.

6.4.5.2 A Type IP-2 package shall, if it were subjected to the tests specified in 6.4.15.4 and 6.4.15.5, prevent:

(a) Loss or dispersal of the radioactive contents; and

(b) Loss of shielding integrity which would result in more than a 20% increase in the radiation level at any external surface of the package.

6.4.5.3 A Type IP-3 package shall meet all the requirements specified in 6.4.7.2 to 6.4.7.15.

6.4.5.4 ***Alternative requirements for Types IP-2 and IP-3 packages***

6.4.5.4.1 Packages may be used as Type IP-2 package provided that:

(a) They satisfy the requirements of 6.4.5.1;

(b) They are designed to conform to the standards prescribed in Chapter 6.1 or other requirements at least equivalent to those standards; and

(c) When subjected to the tests required for packing groups I or II in Chapter 6.1, they would prevent:

(i) loss or dispersal of the radioactive contents; and

(ii) loss of shielding integrity which would result in more than a 20% increase in the radiation level at any external surface of the package.

6.4.5.4.2 Tank-containers and portable tanks may also be used as Types IP-2 or IP-3 packages, provided that:

(a) They satisfy the requirements of 6.4.5.1;

(b) They are designed to conform to the standards prescribed in Chapter 6.7 or Chapter 6.8, or other requirements at least equivalent to those standards, and are capable of withstanding a test pressure of 265 kPa; and

(c) They are designed so that any additional shielding which is provided shall be capable of withstanding the static and dynamic stresses resulting from handling and routine conditions of carriage and of preventing a loss of shielding integrity which would result in more than a 20% increase in the radiation level at any external surface of the portable tanks or tank-containers.

6.4.5.4.3 Tanks, other than portable tanks and tank-containers, may also be used as Types IP-2 or IP-3 packages for carrying LSA-I and LSA-II liquids and gases as prescribed in Table 4.1.9.2.4, provided that they conform to standards at least equivalent to those prescribed in 6.4.5.4.2.

6.4.5.4.4 Containers may also be used as Types IP-2 or IP-3 packages, provided that:

(a) The radioactive contents are restricted to solid materials;

(b) They satisfy the requirements of 6.4.5.1; and

(c) They are designed to conform to ISO 1496-1:1990: "Series 1 Containers - Specifications and Testing - Part 1: General Cargo Containers" excluding dimensions and ratings. They shall be designed such that if subjected to the tests prescribed in that document and the accelerations occurring during routine conditions of carriage they would prevent:

(i) loss or dispersal of the radioactive contents; and

(ii) loss of shielding integrity which would result in more than a 20% increase in the radiation level at any external surface of the containers.

6.4.5.4.5 Metal intermediate bulk containers may also be used as Types IP-2 or IP-3 packages provided that:

(a) They satisfy the requirements of 6.4.5.1; and

(b) They are designed to conform to the standards and tests prescribed in Chapter 6.5 for packing groups I or II, but with the drop test conducted in the most damaging orientation, they would prevent:

(i) loss or dispersal of the radioactive contents; and

(ii) loss of shielding integrity which would result in more than a 20% increase in the radiation level at any external surface of the intermediate bulk container.

6.4.6 Requirements for packages containing uranium hexafluoride

6.4.6.1 Packages designed to contain uranium hexafluoride shall meet the requirements prescribed elsewhere in ADR which pertain to the radioactive and fissile properties of the material. Except as allowed in 6.4.6.4, uranium hexafluoride in quantities of 0.1 kg or more shall also be packaged and carried in accordance with the provisions of ISO 7195:1993 "Packaging of uranium hexafluoride (UF_6) for transport", and the requirements of 6.4.6.2 and 6.4.6.3.

6.4.6.2 Each package designed to contain 0.1 kg or more of uranium hexafluoride shall be designed so that it would meet the following requirements:

(a) Withstand without leakage and without unacceptable stress, as specified in ISO 7195:1993, the structural test as specified in 6.4.21.5;

(b) Withstand without loss or dispersal of the uranium hexafluoride the free drop test specified in 6.4.15.4; and

(c) Withstand without rupture of the containment system the thermal test specified in 6.4.17.3.

6.4.6.3 Packages designed to contain 0.1 kg or more of uranium hexafluoride shall not be provided with pressure relief devices.

6.4.6.4 Subject to the approval of the competent authority, packages designed to contain 0.1 kg or more of uranium hexafluoride may be carried if:

(a) The packages are designed to international or national standards other than ISO 7195:1993 provided an equivalent level of safety is maintained;

(b) The packages are designed to withstand without leakage and without unacceptable stress a test pressure of less than 2.76 MPa as specified in 6.4.21.5; or

(c) For packages designed to contain 9 000 kg or more of uranium hexafluoride, the packages do not meet the requirement of 6.4.6.2 (c).

In all other respects the requirements specified in 6.4.6.1 to 6.4.6.3 shall be satisfied.

6.4.7 Requirements for Type A packages

6.4.7.1 Type A packages shall be designed to meet the general requirements of 6.4.2 and of 6.4.7.2 to 6.4.7.17.

6.4.7.2 The smallest overall external dimension of the package shall not be less than 10 cm.

6.4.7.3 The outside of the package shall incorporate a feature such as a seal, which is not readily breakable and which, while intact, will be evidence that it has not been opened.

6.4.7.4 Any tie-down attachments on the package shall be so designed that, under normal and accident conditions of carriage, the forces in those attachments shall not impair the ability of the package to meet the requirements of ADR.

6.4.7.5 The design of the package shall take into account temperatures ranging from -40°C to +70°C for the components of the packaging. Attention shall be given to freezing temperatures for liquids and to the potential degradation of packaging materials within the given temperature range.

6.4.7.6 The design and manufacturing techniques shall be in accordance with national or international standards, or other requirements, acceptable to the competent authority.

6.4.7.7 The design shall include a containment system securely closed by a positive fastening device which cannot be opened unintentionally or by a pressure which may arise within the package.

6.4.7.8 Special form radioactive material may be considered as a component of the containment system.

6.4.7.9 If the containment system forms a separate unit of the package, it shall be capable of being securely closed by a positive fastening device which is independent of any other part of the packaging.

6.4.7.10 The design of any component of the containment system shall take into account, where applicable, the radiolytic decomposition of liquids and other vulnerable materials and the generation of gas by chemical reaction and radiolysis.

6.4.7.11 The containment system shall retain its radioactive contents under a reduction of ambient pressure to 60 kPa.

6.4.7.12 All valves, other than pressure relief valves, shall be provided with an enclosure to retain any leakage from the valve.

6.4.7.13 A radiation shield which encloses a component of the package specified as a part of the containment system shall be so designed as to prevent the unintentional release of that component from the shield. Where the radiation shield and such component within it form a separate unit, the radiation shield shall be capable of being securely closed by a positive fastening device which is independent of any other packaging structure.

6.4.7.14 A package shall be so designed that if it were subjected to the tests specified in 6.4.15, it would prevent:

(a) Loss or dispersal of the radioactive contents; and

(b) Loss of shielding integrity which would result in more than a 20% increase in the radiation level at any external surface of the package.

6.4.7.15 The design of a package intended for liquid radioactive material shall make provision for ullage to accommodate variations in the temperature of the contents, dynamic effects and filling dynamics.

Type A packages to contain liquids

6.4.7.16 A Type A package designed to contain liquids shall, in addition:

(a) Be adequate to meet the conditions specified in 6.4.7.14 (a) above if the package is subjected to the tests specified in 6.4.16; and

(b) Either

(i) be provided with sufficient absorbent material to absorb twice the volume of the liquid contents. Such absorbent material shall be suitably positioned so as to contact the liquid in the event of leakage; or

(ii) be provided with a containment system composed of primary inner and secondary outer containment components designed to ensure retention of the liquid contents, within the secondary outer containment components, even if the primary inner components leak.

Type A packages to contain gas

6.4.7.17 A package designed for gases shall prevent loss or dispersal of the radioactive contents if the package were subjected to the tests specified in 6.4.16. A Type A package designed for tritium gas or for noble gases shall be excepted from this requirement.

6.4.8 Requirements for Type B(U) packages

6.4.8.1 Type B(U) packages shall be designed to meet the requirements specified in 6.4.2, and of 6.4.7.2 to 6.4.7.15, except as specified in 6.4.7.14 (a), and, in addition, the requirements specified in 6.4.8.2 to 6.4.8.15.

6.4.8.2 A package shall be so designed that, under the ambient conditions specified in 6.4.8.4 and 6.4.8.5 heat generated within the package by the radioactive contents shall not, under normal conditions of carriage, as demonstrated by the tests in 6.4.15, adversely affect the package in such a way that it would fail to meet the applicable requirements for containment and shielding if left unattended for a period of one week. Particular attention shall be paid to the effects of heat, which may:

(a) Alter the arrangement, the geometrical form or the physical state of the radioactive contents or, if the radioactive material is enclosed in a can or receptacle (for example, clad fuel elements), cause the can, receptacle or radioactive material to deform or melt; or

(b) Lessen the efficiency of the packaging through differential thermal expansion or cracking or melting of the radiation shielding material; or

(c) In combination with moisture, accelerate corrosion.

6.4.8.3 A package shall be so designed that, under the ambient condition specified in 6.4.8.4, the temperature of the accessible surfaces of a package shall not exceed 50 °C, unless the package is carried under exclusive use.

6.4.8.4 The ambient temperature shall be assumed to be 38 °C.

6.4.8.5 The solar insolation conditions shall be assumed to be as specified in Table 6.4.8.5.

Table 6.4.8.5: Insolation data

Case	Form and location of surface	Insolation for 12 hours per day (W/m^2)
1	Flat surfaces carried horizontally-downward facing	0
2	Flat surfaces carried horizontally-upward facing	800
3	Surfaces carried vertically	200[a]
4	Other downward facing (not horizontal) surfaces	200[a]
5	All other surfaces	400[a]

[a] *Alternatively, a sine function may be used, with an absorption coefficient adopted and the effects of possible reflection from neighbouring objects neglected.*

6.4.8.6 A package which includes thermal protection for the purpose of satisfying the requirements of the thermal test specified in 6.4.17.3 shall be so designed that such protection will remain effective if the package is subjected to the tests specified in 6.4.15 and 6.4.17.2 (a) and (b) or 6.4.17.2 (b) and (c), as appropriate. Any such protection on the exterior of the package shall not be rendered ineffective by ripping, cutting, skidding, abrasion or rough handling.

6.4.8.7 A package shall be so designed that, if it were subjected to:

(a) The tests specified in 6.4.15, it would restrict the loss of radioactive contents to not more than 10^{-6} A_2 per hour; and

(b) The tests specified in 6.4.17.1, 6.4.17.2 (b), 6.4.17.3, and 6.4.17.4 and the tests in

(i) 6.4.17.2 (c), when the package has a mass not greater than 500 kg, an overall density not greater than 1 000 kg/m^3 based on the external dimensions, and radioactive contents greater than 1 000 A_2 not as special form radioactive material, or

(ii) 6.4.17.2 (a), for all other packages,

it would meet the following requirements:

- retain sufficient shielding to ensure that the radiation level at 1 m from the surface of the package would not exceed 10 mSv/h with the maximum radioactive contents which the package is designed to contain; and

- restrict the accumulated loss of radioactive contents in a period of one week to not more than 10 A_2 for krypton-85 and not more than A_2 for all other radionuclides.

Where mixtures of different radionuclides are present, the provisions of 2.2.7.7.2.4 to 2.2.7.7.2.6 shall apply except that for krypton-85 an effective A_2(i) value equal to 10 A_2 may be used. For case (a) above, the assessment shall take into account the external contamination limits of 4.1.9.1.2.

6.4.8.8 A package for radioactive contents with activity greater than 10^5 A_2 shall be so designed that if it were subjected to the enhanced water immersion test specified in 6.4.18, there would be no rupture of the containment system.

6.4.8.9 Compliance with the permitted activity release limits shall depend neither upon filters nor upon a mechanical cooling system.

6.4.8.10 A package shall not include a pressure relief system from the containment system which would allow the release of radioactive material to the environment under the conditions of the tests specified in 6.4.15 and 6.4.17.

6.4.8.11 A package shall be so designed that if it were at the maximum normal operating pressure and it were subjected to the tests specified in 6.4.15 and 6.4.17, the level of strains in the containment system would not attain values which would adversely affect the package in such a way that it would fail to meet the applicable requirements.

6.4.8.12 A package shall not have a maximum normal operating pressure in excess of a gauge pressure of 700 kPa.

6.4.8.13 The maximum temperature of any surface readily accessible during carriage of a package shall not exceed 85 °C in the absence of insolation under the ambient conditions specified in 6.4.8.4. The package shall be carried under exclusive use, as specified in 6.4.8.3, if this maximum temperature exceeds 50 °C. Account may be taken of barriers or screens intended to give protection to persons without the need for the barriers or screens being subject to any test.

6.4.8.14 *(Reserved)*

6.4.8.15 A package shall be designed for an ambient temperature range from -40 °C to +38 °C.

6.4.9 Requirements for Type B(M) packages

6.4.9.1 Type B(M) packages shall meet the requirements for Type B(U) packages specified in 6.4.8.1, except that for packages to be carried solely within a specified country or solely between specified countries, conditions other than those given in 6.4.7.5, 6.4.8.4, 6.4.8.5, and 6.4.8.8 to 6.4.8.15 above may be assumed with the approval of the competent authorities of these countries. Notwithstanding, the requirements for Type B(U) packages specified in 6.4.8.8 to 6.4.8.15 shall be met as far as practicable.

6.4.9.2 Intermittent venting of Type B(M) packages may be permitted during carriage, provided that the operational controls for venting are acceptable to the relevant competent authorities.

6.4.10 Requirements for Type C packages

6.4.10.1 Type C packages shall be designed to meet the requirements specified in 6.4.2 and of 6.4.7.2 to 6.4.7.15, except as specified in 6.4.7.14 (a), and of the requirements specified in 6.4.8.2 to 6.4.8.5, 6.4.8.9 to 6.4.8.15, and, in addition, of 6.4.10.2 to 6.4.10.4.

6.4.10.2 A package shall be capable of meeting the assessment criteria prescribed for tests in 6.4.8.7 (b) and 6.4.8.11 after burial in an environment defined by a thermal conductivity of 0.33 $W.m^{-1}.K^{-1}$ and a temperature of 38 °C in the steady state. Initial conditions for the assessment shall assume that any thermal insulation of the package remains intact, the package is at the maximum normal operating pressure and the ambient temperature is 38 °C.

6.4.10.3 A package shall be so designed that, if it were at the maximum normal operating pressure and subjected to:

(a) The tests specified in 6.4.15, it would restrict the loss of radioactive contents to not more than 10^{-6} A_2 per hour; and

(b) The test sequences in 6.4.20.1, it would meet the following requirements:

(i) retain sufficient shielding to ensure that the radiation level at 1 m from the surface of the package would not exceed 10 mSv/h with the maximum radioactive contents which the package is designed to contain; and

(ii) restrict the accumulated loss of radioactive contents in a period of 1 week to not more than 10 A_2 for krypton-85 and not more than A_2 for all other radionuclides.

Where mixtures of different radionuclides are present, the provisions of 2.2.7.7.2.4 to 2.2.7.7.2.6 shall apply except that for krypton-85 an effective A_2(i) value equal to 10 A_2 may be used. For case (a) above, the assessment shall take into account the external contamination limits of 4.1.9.1.2.

6.4.10.4 A package shall be so designed that there will be no rupture of the containment system following performance of the enhanced water immersion test specified in 6.4.18.

6.4.11 Requirements for packages containing fissile material

6.4.11.1 Fissile material shall be carried so as to:

(a) Maintain sub-criticality during normal and accident conditions of carriage; in particular, the following contingencies shall be considered:

(i) water leaking into or out of packages;

(ii) the loss of efficiency of built-in neutron absorbers or moderators;

(iii) rearrangement of the contents either within the package or as a result of loss from the package;

(iv) reduction of spaces within or between packages;

(v) packages becoming immersed in water or buried in snow; and

(vi) temperature changes; and

(b) Meet the requirements:

(i) of 6.4.7.2 for packages containing fissile material;

(ii) prescribed elsewhere in ADR which pertain to the radioactive properties of the material; and

(iii) specified in 6.4.11.3 to 6.4.11.12, unless excepted by 6.4.11.2.

6.4.11.2 Fissile material meeting one of the provisions (a) to (d) of this paragraph is excepted from the requirement to be carried in packages that comply with 6.4.11.3 to 6.4.11.12 as well as the other requirements of ADR that apply to fissile material. Only one type of exception is allowed per consignment.

(a) A mass limit per consignment such that:

$$\frac{\text{mass of uranium - 235 (g)}}{X} + \frac{\text{mass of other fissile material (g)}}{Y} < 1$$

where X and Y are the mass limits defined in Table 6.4.11.2, provided that either:

(i) each individual package contains not more than 15 g of fissile material; for unpackaged material, this quantity limitation shall apply to the consignment being carried in or on the vehicle; or

(ii) the fissile material is a homogeneous hydrogenous solution or mixture where the ratio of fissile nuclides to hydrogen is less than 5% by mass; or

(iii) there is not more than 5 g of fissile material in any 10 litre volume of material.

Neither beryllium nor deuterium in hydrogenous material enriched in deuterium shall be present in quantities exceeding 1% of the applicable consignment mass limits provided in Table 6.4.11.2;

(b) Uranium enriched in uranium-235 to a maximum of 1% by mass, and with a total plutonium and uranium-233 content not exceeding 1% of the mass of uranium-235, provided that the fissile material is distributed essentially homogeneously throughout the material. In addition, if uranium-235 is present in metallic, oxide or carbide forms, it shall not form a lattice arrangement;

(c) Liquid solutions of uranyl nitrate enriched in uranium-235 to a maximum of 2% by mass, with a total plutonium and uranium-233 content not exceeding 0.002% of the mass of uranium, and with a minimum nitrogen to uranium atomic ratio (N/U) of 2;

(d) Packages containing, individually, a total plutonium mass not more than 1 kg, of which not more than 20% by mass may consist of plutonium-239, plutonium-241 or any combination of those radionuclides.

Table 6.4.11.2: Consignment mass limits for exceptions from the requirements for packages containing fissile material

Fissile material	Fissile material mass (g) mixed with substances having an average hydrogen density less than or equal to water	Fissile material mass (g) mixed with substances having an average hydrogen density greater than water
Uranium -235(X)	400	290
Other fissile material (Y)	250	180

6.4.11.3 Where the chemical or physical form, isotopic composition, mass or concentration, moderation ratio or density, or geometric configuration is not known, the assessments of 6.4.11.7 to 6.4.11.12 shall be performed assuming that each parameter that is not known has the value which gives the maximum neutron multiplication consistent with the known conditions and parameters in these assessments.

6.4.11.4 For irradiated nuclear fuel the assessments of 6.4.11.7 to 6.4.11.12 shall be based on an isotopic composition demonstrated to provide:

(a) The maximum neutron multiplication during the irradiation history; or

(b) A conservative estimate of the neutron multiplication for the package assessments. After irradiation but prior to shipment, a measurement shall be performed to confirm the conservatism of the isotopic composition.

6.4.11.5 The package, after being subjected to the tests specified in 6.4.15, must prevent the entry of a 10 cm cube.

6.4.11.6 The package shall be designed for an ambient temperature range of -40°C to + 38°C unless the competent authority specifies otherwise in the certificate of approval for the package design.

6.4.11.7 For a package in isolation, it shall be assumed that water can leak into or out of all void spaces of the package, including those within the containment system. However, if the design incorporates special features to prevent such leakage of water into or out of certain void spaces, even as a result of error, absence of leakage may be assumed in respect of those void spaces. Special features shall include the following:

(a) Multiple high standard water barriers, each of which would remain watertight if the package were subject to the tests prescribed in 6.4.11.12 (b), a high degree of quality control in the manufacture, maintenance and repair of packagings and tests to demonstrate the closure of each package before each shipment; or

(b) For packages containing uranium hexafluoride only:

(i) packages where, following the tests prescribed in 6.4.11.12 (b), there is no physical contact between the valve and any other component of the packaging other than at its original point of attachment and where, in addition, following the test prescribed in 6.4.17.3 the valves remain leaktight; and

(ii) a high degree of quality control in the manufacture, maintenance and repair of packagings coupled with tests to demonstrate closure of each package before each shipment.

6.4.11.8 It shall be assumed that the confinement system shall be closely reflected by at least 20 cm of water or such greater reflection as may additionally be provided by the surrounding material of the packaging. However, when it can be demonstrated that the confinement system remains within the packaging following the tests prescribed in 6.4.11.12 (b), close reflection of the package by at least 20 cm of water may be assumed in 6.4.11.9 (c).

6.4.11.9 The package shall be subcritical under the conditions of 6.4.11.7 and 6.4.11.8 with the package conditions that result in the maximum neutron multiplication consistent with:

(a) Routine conditions of carriage (incident free);

(b) The tests specified in 6.4.11.11 (b);

(c) The tests specified in 6.4.11.12 (b).

6.4.11.10 *(Reserved)*

6.4.11.11 For normal conditions of carriage a number "N" shall be derived, such that five times "N" shall be sub-critical for the arrangement and package conditions that provide the maximum neutron multiplication consistent with the following:

(a) There shall not be anything between the packages, and the package arrangement shall be reflected on all sides by at least 20 cm of water; and

(b) The state of the packages shall be their assessed or demonstrated condition if they had been subjected to the tests specified in 6.4.15.

6.4.11.12 For accident conditions of carriage a number "N" shall be derived, such that two times "N" shall be sub-critical for the arrangement and package conditions that provide the maximum neutron multiplication consistent with the following:

(a) Hydrogenous moderation between packages, and the package arrangement reflected on all sides by at least 20 cm of water; and

(b) The tests specified in 6.4.15 followed by whichever of the following is the more limiting:

(i) the tests specified in 6.4.17.2 (b) and, either 6.4.17.2 (c) for packages having a mass not greater than 500 kg and an overall density not greater than 1 000 kg/m^3 based on the external dimensions, or 6.4.17.2 (a) for all other packages; followed by the test specified in 6.4.17.3 and completed by the tests specified in 6.4.19.1 to 6.4.19.3; or

(ii) the test specified in 6.4.17.4; and

(c) Where any part of the fissile material escapes from the containment system following the tests specified in 6.4.11.12 (b), it shall be assumed that fissile material escapes from each package in the array and all of the fissile material shall be arranged in the configuration and moderation that results in the maximum neutron multiplication with close reflection by at least 20 cm of water.

6.4.12 Test procedures and demonstration of compliance

6.4.12.1 Demonstration of compliance with the performance standards required in 2.2.7.3.3, 2.2.7.3.4, 2.2.7.4.1, 2.2.7.4.2, and 6.4.2 to 6.4.11 must be accomplished by any of the methods listed below or by a combination thereof:

(a) Performance of tests with specimens representing LSA-III material, or special form radioactive material, or with prototypes or samples of the packaging, where the contents of the specimen or the packaging for the tests shall simulate as closely as practicable the expected range of radioactive contents and the specimen or packaging to be tested shall be prepared as presented for carriage;

(b) Reference to previous satisfactory demonstrations of a sufficiently similar nature;

(c) Performance of tests with models of appropriate scale incorporating those features which are significant with respect to the item under investigation when engineering experience has shown results of such tests to be suitable for design purposes. When a scale model is used, the need for adjusting certain test parameters, such as penetrator diameter or compressive load, shall be taken into account;

(d) Calculation, or reasoned argument, when the calculation procedures and parameters are generally agreed to be reliable or conservative.

6.4.12.2 After the specimen, prototype or sample has been subjected to the tests, appropriate methods of assessment shall be used to assure that the requirements for the test procedures have been fulfilled in compliance with the performance and acceptance standards prescribed in 2.2.7.3.3, 2.2.7.3.4, 2.2.7.4.1, 2.2.7.4.2, and 6.4.2 to 6.4.11.

6.4.12.3 All specimens shall be inspected before testing in order to identify and record faults or damage including the following:

(a) Divergence from the design;

(b) Defects in manufacture;

(c) Corrosion or other deterioration; and

(d) Distortion of features.

The containment system of the package shall be clearly specified. The external features of the specimen shall be clearly identified so that reference may be made simply and clearly to any part of such specimen.

6.4.13 Testing the integrity of the containment system and shielding and evaluating criticality safety

After each of the applicable tests specified in 6.4.15 to 6.4.21:

(a) Faults and damage shall be identified and recorded;

(b) It shall be determined whether the integrity of the containment system and shielding has been retained to the extent required in 6.4.2 to 6.4.11 for the package under test; and

(c) For packages containing fissile material, it shall be determined whether the assumptions and conditions used in the assessments required by 6.4.11.1 to 6.4.11.12 for one or more packages are valid.

6.4.14 Target for drop tests

The target for the drop tests specified in 2.2.7.4.5 (a), 6.4.15.4, 6.4.16 (a), 6.4.17.2 and 6.4.20.2 shall be a flat, horizontal surface of such a character that any increase in its resistance to displacement or deformation upon impact by the specimen would not significantly increase the damage to the specimen.

6.4.15 Tests for demonstrating ability to withstand normal conditions of carriage

6.4.15.1 The tests are: the water spray test, the free drop test, the stacking test and the penetration test. Specimens of the package shall be subjected to the free drop test, the stacking test and the penetration test, preceded in each case by the water spray test. One specimen may be used for all the tests, provided that the requirements of 6.4.15.2 are fulfilled.

6.4.15.2 The time interval between the conclusion of the water spray test and the succeeding test shall be such that the water has soaked in to the maximum extent, without appreciable drying of the exterior of the specimen. In the absence of any evidence to the contrary, this interval shall be taken to be two hours if the water spray is applied from four directions simultaneously. No time interval shall elapse, however, if the water spray is applied from each of the four directions consecutively.

6.4.15.3 Water spray test: The specimen shall be subjected to a water spray test that simulates exposure to rainfall of approximately 5 cm per hour for at least one hour.

6.4.15.4 Free drop test: The specimen shall drop onto the target so as to suffer maximum damage in respect of the safety features to be tested.

(a) The height of drop measured from the lowest point of the specimen to the upper surface of the target shall be not less than the distance specified in Table 6.4.15.4 for the applicable mass. The target shall be as defined in 6.4.14;

(b) For rectangular fibreboard or wood packages not exceeding a mass of 50 kg, a separate specimen shall be subjected to a free drop onto each corner from a height of 0.3 m;

(c) For cylindrical fibreboard packages not exceeding a mass of 100 kg, a separate specimen shall be subjected to a free drop onto each of the quarters of each rim from a height of 0.3 m.

Table 6.4.15.4: Free drop distance for testing packages to normal conditions of carriage

Package mass (kg)	Free drop distance (m)
Package mass < 5 000	1.2
5 000 ≤ Package mass < 10 000	0.9
10 000 ≤ Package mass < 15 000	0.6
15 000 ≤ Package mass	0.3

6.4.15.5 Stacking test: Unless the shape of the packaging effectively prevents stacking, the specimen shall be subjected, for a period of 24 h, to a compressive load equal to the greater of the following:

(a) The equivalent of 5 times the mass of the actual package; and

(b) The equivalent of 13 kPa multiplied by the vertically projected area of the package.

The load shall be applied uniformly to two opposite sides of the specimen, one of which shall be the base on which the package would typically rest.

6.4.15.6 Penetration test: The specimen shall be placed on a rigid, flat, horizontal surface which will not move significantly while the test is being carried out.

(a) A bar of 3.2 cm in diameter with a hemispherical end and a mass of 6 kg shall be dropped and directed to fall, with its longitudinal axis vertical, onto the centre of the weakest part of the specimen, so that, if it penetrates sufficiently far, it will hit the containment system. The bar shall not be significantly deformed by the test performance;

(b) The height of drop of the bar measured from its lower end to the intended point of impact on the upper surface of the specimen shall be 1 m.

6.4.16 Additional tests for Type A packages designed for liquids and gases

A specimen or separate specimens shall be subjected to each of the following tests unless it can be demonstrated that one test is more severe for the specimen in question than the other, in which case one specimen shall be subjected to the more severe test.

(a) Free drop test: The specimen shall drop onto the target so as to suffer the maximum damage in respect of containment. The height of the drop measured from the lowest part of the specimen to the upper surface of the target shall be 9 m. The target shall be as defined in 6.4.14;

(b) Penetration test: The specimen shall be subjected to the test specified in 6.4.15.6 except that the height of drop shall be increased to 1.7 m from the 1 m specified in 6.4.15.6 (b).

6.4.17 Tests for demonstrating ability to withstand accident conditions in carriage

6.4.17.1 The specimen shall be subjected to the cumulative effects of the tests specified in 6.4.17.2 and 6.4.17.3, in that order. Following these tests, either this specimen or a separate specimen shall be subjected to the effect(s) of the water immersion test(s) as specified in 6.4.17.4 and, if applicable, 6.4.18.

6.4.17.2 Mechanical test: The mechanical test consists of three different drop tests. Each specimen shall be subjected to the applicable drops as specified in 6.4.8.7 or 6.4.11.12. The order in which the specimen is subjected to the drops shall be such that, on completion of the mechanical test, the specimen shall have suffered such damage as will lead to the maximum damage in the thermal test which follows.

(a) For drop I, the specimen shall drop onto the target so as to suffer the maximum damage, and the height of the drop measured from the lowest point of the specimen to the upper surface of the target shall be 9 m. The target shall be as defined in 6.4.14;

(b) For drop II, the specimen shall drop so as to suffer the maximum damage onto a bar rigidly mounted perpendicularly on the target. The height of the drop measured from the intended point of impact of the specimen to the upper surface of the bar shall be 1 m. The bar shall be of solid mild steel of circular section, (15.0 cm ± 0.5 cm) in diameter and 20 cm long unless a longer bar would cause greater damage, in which case a bar of sufficient length to cause maximum damage shall be used. The upper end of the bar shall be flat and horizontal with its edge rounded off to a radius of not more than 6 mm. The target on which the bar is mounted shall be as described in 6.4.14;

(c) For drop III, the specimen shall be subjected to a dynamic crush test by positioning the specimen on the target so as to suffer maximum damage by the drop of a 500 kg mass from 9 m onto the specimen. The mass shall consist of a solid mild steel plate 1 m by 1 m and shall fall in a horizontal attitude. The height of the drop shall be measured from the underside of the plate to the highest point of the specimen. The target on which the specimen rests shall be as defined in 6.4.14.

6.4.17.3 Thermal test: The specimen shall be in thermal equilibrium under conditions of an ambient temperature of 38 °C, subject to the solar insolation conditions specified in Table 6.4.8.5 and subject to the design maximum rate of internal heat generation within the package from the radioactive contents. Alternatively, any of these parameters are allowed to have different values prior to and during the test, providing due account is taken of them in the subsequent assessment of package response.

The thermal test shall then consist of:

(a) Exposure of a specimen for a period of 30 minutes to a thermal environment which provides a heat flux at least equivalent to that of a hydrocarbon fuel/air fire in sufficiently quiescent ambient conditions to give a minimum average flame emissivity coefficient of 0.9 and an average temperature of at least 800 °C, fully engulfing the specimen, with a surface absorptivity coefficient of 0.8 or that value which the package may be demonstrated to possess if exposed to the fire specified, followed by;

(b) Exposure of the specimen to an ambient temperature of 38 °C, subject to the solar insolation conditions specified in Table 6.4.8.5 and subject to the design maximum rate of internal heat generation within the package by the radioactive contents for a sufficient period to ensure that temperatures in the specimen are everywhere decreasing and/or are approaching initial steady state conditions. Alternatively, any of these parameters are allowed to have different values following cessation of heating, providing due account is taken of them in the subsequent assessment of package response.

During and following the test the specimen shall not be artificially cooled and any combustion of materials of the specimen shall be permitted to proceed naturally.

6.4.17.4 Water immersion test: The specimen shall be immersed under a head of water of at least 15 m for a period of not less than eight hours in the attitude which will lead to maximum damage. For demonstration purposes, an external gauge pressure of at least 150 kPa shall be considered to meet these conditions.

6.4.18 Enhanced water immersion test for Type B(U) and Type B(M) packages containing more than 10^5 A_2 and Type C packages

Enhanced water immersion test: The specimen shall be immersed under a head of water of at least 200 m for a period of not less than one hour. For demonstration purposes, an external gauge pressure of at least 2 MPa shall be considered to meet these conditions.

6.4.19 Water leakage test for packages containing fissile material

6.4.19.1 Packages for which water in-leakage or out-leakage to the extent which results in greatest reactivity has been assumed for purposes of assessment under 6.4.11.7 to 6.4.11.12 shall be excepted from the test.

6.4.19.2 Before the specimen is subjected to the water leakage test specified below, it shall be subjected to the tests in 6.4.17.2 (b), and either 6.4.17.2 (a) or (c) as required by 6.4.11.12, and the test specified in 6.4.17.3.

6.4.19.3 The specimen shall be immersed under a head of water of at least 0.9 m for a period of not less than 8 hours and in the attitude for which maximum leakage is expected.

6.4.20 Tests for Type C packages

6.4.20.1 Specimens shall be subjected to the effects of each of the following test sequences in the orders specified:

(a) The tests specified in 6.4.17.2 (a), 6.4.17.2 (c), 6.4.20.2 and 6.4.20.3; and

(b) The test specified in 6.4.20.4.

Separate specimens are allowed to be used for each of the sequences (a) and (b).

6.4.20.2 Puncture/tearing test: The specimen shall be subjected to the damaging effects of a solid probe made of mild steel. The orientation of the probe to the surface of the specimen shall be as to cause maximum damage at the conclusion of the test sequence specified in 6.4.20.1 (a).

(a) The specimen, representing a package having a mass less than 250 kg, shall be placed on a target and subjected to a probe having a mass of 250 kg falling from a height of 3 m above the intended impact point. For this test the probe shall be a 20 cm diameter cylindrical bar with the striking end forming a frustum of a right circular cone with the following dimensions: 30 cm height and 2.5 cm in diameter at the top with its edge rounded off to a radius of not more than 6 mm. The target on which the specimen is placed shall be as specified in 6.4.14;

(b) For packages having a mass of 250 kg or more, the base of the probe shall be placed on a target and the specimen dropped onto the probe. The height of the drop, measured from the point of impact with the specimen to the upper surface of the probe shall be 3 m. For this test the probe shall have the same properties and dimensions as specified in (a) above, except that the length and mass of the probe shall be such as to incur maximum damage to the specimen. The target on which the base of the probe is placed shall be as specified in 6.4.14.

6.4.20.3 Enhanced thermal test: The conditions for this test shall be as specified in 6.4.17.3, except that the exposure to the thermal environment shall be for a period of 60 minutes.

6.4.20.4 Impact test: The specimen shall be subject to an impact on a target at a velocity of not less than 90 m/s, at such an orientation as to suffer maximum damage. The target shall be as defined in 6.4.14, except that the target surface may be at any orientation as long as the surface is normal to the specimen path.

6.4.21 Inspections for packagings designed to contain 0.1 kg or more of uranium hexafluoride

6.4.21.1 Every manufactured packaging and its service and structural equipment shall, either jointly or separately, undergo an inspection initially before being put into service and periodically thereafter. These inspections shall be performed and certified by agreement with the competent authority.

6.4.21.2 The initial inspection shall consist of a check of the design characteristics, a structural test, a leakproofness test, a water capacity test and a check of satisfactory operation of the service equipment.

6.4.21.3 The periodic inspections shall consist of a visual examination, a structural test, a leakproofness test and a check of satisfactory operation of the service equipment. The maximum intervals for periodic inspections shall be five years. Packagings which have not been inspected within this five-year period shall be examined before carriage in accordance with a programme approved by the competent authority. They shall not be refilled before completion of the full programme for periodic inspections.

6.4.21.4 The check of design characteristics shall demonstrate compliance with the design type specifications and the manufacturing programme.

6.4.21.5 For the initial structural test, packagings designed to contain 0.1 kg or more of uranium hexaflouride shall be tested hydraulically at an internal pressure of at least 1.38 MPa but, when the test pressure is less than 2.76 MPa, the design shall require multilateral approval. For retesting packagings, any other equivalent non-destructive testing may be applied subject to multilateral approval.

6.4.21.6 The leakproofness test shall be performed in accordance with a procedure which is capable of indicating leakages in the containment system with a sensitivity of 0.1 Pa.l/s (10^{-6} bar.l/s).

6.4.21.7 The water capacity of the packagings shall be established with an accuracy of ± 0.25% at a reference temperature of 15 °C. The volume shall be stated on the plate described in 6.4.21.8.

6.4.21.8 A plate made of non-corroding metal shall be durably attached to every packaging in a readily accessible place. The method of attaching the plate must not impair the strength of the packaging. The following particulars, at least, shall be marked on the plate by stamping or by any other equivalent method:

- Approval number;
- Manufacturer's serial number;
- Maximum working pressure (gauge pressure);
- Test pressure (gauge pressure);
- Contents: uranium hexafluoride;
- Capacity in litres;
- Maximum permissible filling mass of uranium hexafluoride;
- Tare mass;
- Date (month, year) of the initial test and the most recent periodic test;
- Stamp of the expert who performed the tests.

6.4.22 Approvals of package designs and materials

6.4.22.1 The approval of designs for packages containing 0.1 kg or more of uranium hexafluoride requires that:

(a) Each design that meets the requirements of 6.4.6.4 shall require multilateral approval;

(b) After 31 December 2003, each design that meets the requirements of 6.4.6.1 to 6.4.6.3 shall require unilateral approval by the competent authority of the country of origin of the design.

6.4.22.2 Each Type B(U) and Type C package design shall require unilateral approval, except that:

(a) A package design for fissile material, which is also subject to 6.4.22.4, 6.4.23.7, and 5.1.5.3.1 shall require multilateral approval; and

(b) A Type B(U) package design for low dispersible radioactive material shall require multilateral approval.

6.4.22.3 Each Type B(M) package design, including those for fissile material which are also subject to the requirements of 6.4.22.4, 6.4.23.7, and 5.1.5.3.1 and those for low dispersible radioactive material, shall require multilateral approval.

6.4.22.4 Each package design for fissile material which is not excepted according to 6.4.11.2 from the requirements that apply specifically to packages containing fissile material shall require multilateral approval.

6.4.22.5 The design for special form radioactive material shall require unilateral approval. The design for low dispersible radioactive material shall require multilateral approval (see also 6.4.23.8).

6.4.22.6 Any design that requires unilateral approval originating in a country Contracting Party to ADR shall be approved by the competent authority of this country; if the country where the package has been designed is not a Contracting Party to ADR, carriage is possible on condition that:

(a) a certificate has been supplied by this country, proving that the package satisfies the technical requirements of ADR, and that this certificate is countersigned by the competent authority of the first country Contracting Party to ADR reached by the consignment;

(b) if no certificate and no existing package design approval by a country Contracting Party to ADR has been supplied, the package design is approved by the competent authority of the first country Contracting Party to ADR reached by the consignment.

6.4.22.7 For designs approved under the transitional measures see 1.6.6.

6.4.23 Applications and approvals for radioactive material carriage

6.4.23.1 *(Reserved)*

6.4.23.2 An application for shipment approval shall include:

(a) The period of time, related to the shipment, for which the approval is sought;

(b) The actual radioactive contents, the expected modes of carriage, the type of vehicle, and the probable or proposed route; and

(c) The details of how the precautions and administrative or operational controls, referred to in the package design approval certificates issued under 5.1.5.3.1, are to be put into effect.

6.4.23.3 An application for approval of shipments under special arrangement shall include all the information necessary to satisfy the competent authority that the overall level of safety in carriage is at least equivalent to that which would be provided if all the applicable requirements of ADR had been met.

The application shall also include:

(a) A statement of the respects in which, and of the reasons why, the consignment cannot be made in full accordance with the applicable requirements of ADR; and

(b) A statement of any special precautions or special administrative or operational controls which are to be employed during carriage to compensate for the failure to meet the applicable requirements of ADR.

6.4.23.4 An application for approval of Type B(U) or Type C package design shall include:

(a) A detailed description of the proposed radioactive contents with reference to their physical and chemical states and the nature of the radiation emitted;

(b) A detailed statement of the design, including complete engineering drawings and schedules of materials and methods of manufacture;

(c) A statement of the tests which have been done and their results, or evidence based on calculative methods or other evidence that the design is adequate to meet the applicable requirements;

(d) The proposed operating and maintenance instructions for the use of the packaging;

(e) If the package is designed to have a maximum normal operating pressure in excess of 100 kPa gauge, a specification of the materials of manufacture of the containment system, the samples to be taken, and the tests to be made;

(f) Where the proposed radioactive contents are irradiated fuel, a statement and a justification of any assumption in the safety analysis relating to the characteristics of the fuel and a description of any pre-shipment measurement as required by 6.4.11.4 (b);

(g) Any special stowage provisions necessary to ensure the safe dissipation of heat from the package considering the various modes of carriage to be used and type of vehicle or container;

(h) A reproducible illustration, not larger than 21 cm by 30 cm, showing the make-up of the package; and

(i) A specification of the applicable quality assurance programme as required 1.7.3.

6.4.23.5 An application for approval of a Type B(M) package design shall include, in addition to the general information required for package approval in 6.4.23.4 for Type B(U) packages:

(a) A list of the requirements specified in 6.4.7.5, 6.4.8.4, 6.4.8.5 and 6.4.8.8 to 6.4.8.15 with which the package does not conform;

(b) Any proposed supplementary operational controls to be applied during carriage not regularly provided for in this Annex, but which are necessary to ensure the safety of the package or to compensate for the deficiencies listed in (a) above;

(c) A statement relative to any restrictions on the mode of carriage and to any special loading, carriage, unloading or handling procedures; and

(d) The range of ambient conditions (temperature, solar radiation) which are expected to be encountered during carriage and which have been taken into account in the design.

6.4.23.6 The application for approval of designs for packages containing 0.1 kg or more of uranium hexafluoride shall include all information necessary to satisfy the competent authority that the design meets the applicable requirements of 6.4.6.1, and a description of the applicable quality assurance programme as required in 1.7.3.

6.4.23.7 An application for a fissile package approval shall include all information necessary to satisfy the competent authority that the design meets the applicable requirements of 6.4.11.1, and a specification of the applicable quality assurance programme as required by 1.7.3.

6.4.23.8 An application for approval of design for special form radioactive material and design for low dispersible radioactive material shall include:

(a) A detailed description of the radioactive material or, if a capsule, the contents; particular reference shall be made to both physical and chemical states;

(b) A detailed statement of the design of any capsule to be used;

(c) A statement of the tests which have been done and their results, or evidence based on calculative methods to show that the radioactive material is capable of meeting the performance standards, or other evidence that the special form radioactive material or low dispersible radioactive material meets the applicable requirements of ADR;

(d) A specification of the applicable quality assurance programme as required in 1.7.3; and

(e) Any proposed pre-shipment actions for use in the consignment of special form radioactive material or low dispersible radioactive material.

6.4.23.9 Each approval certificate issued by a competent authority shall be assigned an identification mark. The identification mark shall be of the following generalized type:

VRI/Number/Type Code

(a) Except as provided in 6.4.23.10 (b), VRI represents the international vehicle registration identification code of the country issuing the certificate [1];

(b) The number shall be assigned by the competent authority, and shall be unique and specific with regard to the particular design or shipment. The shipment approval identification mark shall be clearly related to the design approval identification mark;

(c) The following type codes shall be used in the order listed to indicate the types of approval certificates issued:

AF	Type A package design for fissile material
B(U)	Type B(U) package design [B(U) F if for fissile material]
B(M)	Type B(M) package design [B(M) F if for fissile material]
C	Type C package design (CF if for fissile material)
IF	Industrial package design for fissile material
S	Special form radioactive material
LD	Low dispersible radioactive material
T	Shipment
X	Special arrangement

In the case of package designs for non-fissile or fissile excepted uranium hexafluoride, where none of the above codes apply, then the following type codes shall be used:

H(U)	Unilateral approval
H(M)	Multilateral approval;

(d) For package design and special form radioactive material approval certificates, other than those issued under transitional packaging the provisions of 1.6.5.2 to 1.6.5.4, and for low dispersible radioactive material approval certificates, the symbols "-96" shall be added to the type code.

6.4.23.10 These type codes shall be applied as follows:

(a) Each certificate and each package shall bear the appropriate identification mark, comprising the symbols prescribed in 6.4.23.9 (a), (b), (c) and (d) above, except that, for packages, only the applicable design type codes including, if applicable, the symbols "-96", shall appear following the second stroke, that is, the "T" or "X" shall not appear in the identification marking on the package. Where the design approval and shipment approval are combined, the applicable type codes do not need to be repeated. For example:

A/132/B(M)F-96: A Type B(M) package design approved for fissile material, requiring multilateral approval, for which the competent authority of Austria has assigned the design number 132 (to be marked on both the package and on the package design approval certificate);

[1] *See Vienna Convention on Road Traffic (1968).*

A/132/B(M)F-96T: The shipment approval issued for a package bearing the identification mark elaborated above (to be marked on the certificate only);

A/137/X: A special arrangement approval issued by the competent authority of Austria, to which the number 137 has been assigned (to be marked on the certificate only);

A/139/IF-96: An industrial package design for fissile material approved by the competent authority of Austria, to which package design number 139 has been assigned (to be marked on both the package and on the package design approval certificate); and

A/145/H(U)-96: A package design for fissile excepted uranium hexafluoride approved by the competent authority of Austria, to which package design number 145 has been assigned (to be marked on both the package and on the package design approval certificate);

(b) Where multilateral approval is effected by validation according to 6.4.23.16, only the identification mark issued by the country of origin of the design or shipment shall be used. Where multilateral approval is effected by issue of certificates by successive countries, each certificate shall bear the appropriate identification mark and the package whose design was so approved shall bear all appropriate identification marks.

For example:

A/132/B(M)F-96
CH/28/B(M)F-96

would be the identification mark of a package which was originally approved by Austria and was subsequently approved, by separate certificate, by Switzerland. Additional identification marks would be tabulated in a similar manner on the package;

(c) The revision of a certificate shall be indicated by a parenthetical expression following the identification mark on the certificate. For example, A/132/B(M)F-96 (Rev.2) would indicate revision 2 of the Austrian package design approval certificate; or A/132/B(M)F-96 (Rev.0) would indicate the original issuance of the Austrian package design approval certificate. For original issuances, the parenthetical entry is optional and other words such as "original issuance" may also be used in place of "Rev.0". Certificate revision numbers may only be issued by the country issuing the original approval certificate;

(d) Additional symbols (as may be necessitated by national regulations) may be added in brackets to the end of the identification mark; for example, A/132/B(M)F-96(SP503);

(e) It is not necessary to alter the identification mark on the packaging each time that a revision to the design certificate is made. Such re-marking shall be required only in those cases where the revision to the package design certificate involves a change in the letter type codes for the package design following the second stroke.

6.4.23.11 Each approval certificate issued by a competent authority for special form radioactive material or low dispersible radioactive material shall include the following information:

(a) Type of certificate;

(b) The competent authority identification mark;

(c) The issue date and an expiry date;

(d) List of applicable national and international regulations, including the edition of the IAEA Regulations for the Safe Transport of Radioactive Material under which the special form radioactive material or low dispersible radioactive material is approved;

(e) The identification of the special form radioactive material or low dispersible radioactive material;

(f) A description of the special form radioactive material or low dispersible radioactive material;

(g) Design specifications for the special form radioactive material or low dispersible radioactive material which may include references to drawings;

(h) A specification of the radioactive contents which includes the activities involved and which may include the physical and chemical form;

(i) A specification of the applicable quality assurance programme as required in 1.7.3;

(j) Reference to information provided by the applicant relating to specific actions to be taken prior to shipment;

(k) If deemed appropriate by the competent authority, reference to the identity of the applicant;

(l) Signature and identification of the certifying official.

6.4.23.12 Each approval certificate issued by a competent authority for a special arrangement shall include the following information:

(a) Type of certificate;

(b) The competent authority identification mark;

(c) The issue date and an expiry date;

(d) Mode(s) of carriage;

(e) Any restrictions on the modes of carriage, type of vehicle, container, and any necessary routing instructions;

(f) List of applicable national and international regulations, including the edition of the IAEA Regulations for the Safe Transport of Radioactive Material under which the special arrangement is approved;

(g) The following statement:

"This certificate does not relieve the consignor from compliance with any requirement of the government of any country through or into which the package will be carried.";

(h) References to certificates for alternative radioactive contents, other competent authority validation, or additional technical data or information, as deemed appropriate by the competent authority;

(i) Description of the packaging by a reference to the drawings or a specification of the design. If deemed appropriate by the competent authority, a reproducible illustration, not larger than 21 cm by 30 cm, showing the make-up of the package shall also be provided, accompanied by a brief description of the packaging, including materials of manufacture, gross mass, general outside dimensions and appearance;

(j) A specification of the authorized radioactive contents, including any restrictions on the radioactive contents which might not be obvious from the nature of the packaging. This shall include the physical and chemical forms, the activities involved (including those of the various isotopes, if appropriate), amounts in grams (for fissile material), and whether special form radioactive material or low dispersible radioactive material, if applicable;

(k) Additionally, for packages containing fissile material:

(i) a detailed description of the authorized radioactive contents;

(ii) the value of the criticality safety index;

(iii) reference to the documentation that demonstrates the criticality safety of the contents;

(iv) any special features, on the basis of which the absence of water from certain void spaces has been assumed in the criticality assessment;

(v) any allowance (based on 6.4.11.4 (b)) for a change in neutron multiplication assumed in the criticality assessment as a result of actual irradiation experience; and

(vi) the ambient temperature range for which the special arrangement has been approved;

(l) A detailed listing of any supplementary operational controls required for preparation, loading, carriage, unloading and handling of the consignment, including any special stowage provisions for the safe dissipation of heat;

(m) If deemed appropriate by the competent authority, reasons for the special arrangement;

(n) Description of the compensatory measures to be applied as a result of the shipment being under special arrangement;

(o) Reference to information provided by the applicant relating to the use of the packaging or specific actions to be taken prior to the shipment;

(p) A statement regarding the ambient conditions assumed for purposes of design if these are not in accordance with those specified in 6.4.8.4, 6.4.8.5, and 6.4.8.15, as applicable;

(q) Any emergency arrangements deemed necessary by the competent authority;

(r) A specification of the applicable quality assurance programme as required in 1.7.3;

(s) If deemed appropriate by the competent authority, reference to the identity of the applicant and to the identity of the carrier;

(t) Signature and identification of the certifying official.

6.4.23.13 Each approval certificate for a shipment issued by a competent authority shall include the following information:

(a) Type of certificate;

(b) The competent authority identification mark(s);

(c) The issue date and an expiry date;

(d) List of applicable national and international regulations, including the edition of the IAEA Regulations for the Safe Transport of Radioactive Material under which the shipment is approved;

(e) Any restrictions on the modes of carriage, type of vehicle, container, and any necessary routeing instructions;

(f) The following statement:

"This certificate does not relieve the consignor from compliance with any requirement of the government of any country through or into which the package will be carried.";

(g) A detailed listing of any supplementary operational controls required for preparation, loading, carriage, unloading and handling of the consignment, including any special stowage provisions for the safe dissipation of heat or maintenance of criticality safety;

(h) Reference to information provided by the applicant relating to specific actions to be taken prior to shipment;

(i) Reference to the applicable design approval certificate(s);

(j) A specification of the actual radioactive contents, including any restrictions on the radioactive contents which might not be obvious from the nature of the packaging. This shall include the physical and chemical forms, the total activities involved (including those of the various isotopes, if appropriate), amounts in grams (for fissile material), and whether special form radioactive material or low dispersible radioactive material, if applicable;

(k) Any emergency arrangements deemed necessary by the competent authority;

(l) A specification of the applicable quality assurance programme as required in 1.7.3;

(m) If deemed appropriate by the competent authority, reference to the identity of the applicant;

(n) Signature and identification of the certifying official.

6.4.23.14 Each approval certificate of the design of a package issued by a competent authority shall include the following information:

(a) Type of certificate;

(b) The competent authority identification mark;

(c) The issue date and an expiry date;

(d) Any restriction on the modes of carriage, if appropriate;

(e) List of applicable national and international regulations, including the edition of the IAEA Regulations for the Safe Transport of Radioactive Material under which the design is approved;

(f) The following statement;

"This certificate does not relieve the consignor from compliance with any requirement of the government of any country through or into which the package will be carried.";

(g) References to certificates for alternative radioactive contents, other competent authority validation, or additional technical data or information, as deemed appropriate by the competent authority;

(h) A statement authorizing shipment where shipment approval is required under 5.1.5.2.2, if deemed appropriate;

(i) Identification of the packaging;

(j) Description of the packaging by a reference to the drawings or specification of the design. If deemed appropriate by the competent authority, a reproducible illustration, not larger than 21 cm by 30 cm, showing the make-up of the package should also be provided, accompanied by a brief description of the packaging, including materials of manufacture, gross mass, general outside dimensions and appearance;

(k) Specification of the design by reference to the drawings;

(l) A specification of the authorized radioactive content, including any restrictions on the radioactive contents which might not be obvious from the nature of the packaging. This shall include the physical and chemical forms, the activities involved (including those of the various isotopes, if appropriate), amounts in grams (for fissile material), and whether special form radioactive material or low dispersible radioactive material, if applicable;

(m) Additionally, for packages containing fissile material:

(i) a detailed description of the authorized radioactive contents;

(ii) the value of the criticality safety index;

(iii) reference to the documentation that demonstrates the criticality safety of the contents;

(iv) any special features, on the basis of which the absence of water from certain void spaces has been assumed in the criticality assessment;

(v) any allowance (based on 6.4.11.4 (b)) for a change in neutron multiplication assumed in the criticality assessment as a result of actual irradiation experience; and

(vi) the ambient temperature range for which the package design has been approved;

(n) For Type B(M) packages, a statement specifying those requirements of 6.4.7.5, 6.4.8.4, 6.4.8.5 and 6.4.8.8 to 6.4.8.15 with which the package does not conform and any amplifying information which may be useful to other competent authorities;

(o) A detailed listing of any supplementary operational controls required for preparation, loading, carriage, unloading and handling of the consignment, including any special stowage provisions for the safe dissipation of heat;

(p) Reference to information provided by the applicant relating to the use of the packaging or specific actions to be taken prior to shipment;

(q) A statement regarding the ambient conditions assumed for purposes of design if these are not in accordance with those specified in 6.4.8.4, 6.4.8.5 and 6.4.8.15, as applicable;

(r) A specification of the applicable quality assurance programme as required in 1.7.3;

(s) Any emergency arrangements deemed necessary by the competent authority;

(t) If deemed appropriate by the competent authority, reference to the identity of the applicant;

(u) Signature and identification of the certifying official.

6.4.23.15 The competent authority shall be informed of the serial number of each packaging manufactured to a design approved by them. The competent authority shall maintain a register of such serial numbers.

6.4.23.16 Multilateral approval may be by validation of the original certificate issued by the competent authority of the country of origin of the design or shipment. Such validation may take the form of an endorsement on the original certificate or the issuance of a separate endorsement, annex, supplement, etc., by the competent authority of the country through or into which the shipment is made.

CHAPTER 6.5

REQUIREMENTS FOR THE CONSTRUCTION AND TESTING OF INTERMEDIATE BULK CONTAINERS (IBCs)

6.5.1 General requirements applicable to all types of IBCs

6.5.1.1 *Scope*

6.5.1.1.1 The requirements of this Chapter apply to intermediate bulk containers (IBCs) the use of which is expressly authorized for the carriage of certain dangerous goods according to the packing instructions indicated in Column (8) of Table A in Chapter 3.2. Portable tanks and tank-containers which meet the requirements of Chapter 6.7 or 6.8 respectively are not considered to be IBCs. IBCs which meet the requirements of this Chapter are not considered to be containers for the purposes of ADR. The letters IBC only will be used in the rest of the text to refer to intermediate bulk containers.

6.5.1.1.2 Exceptionally, IBCs and their service equipment not conforming strictly to the requirements herein, but having acceptable alternatives, may be considered by the competent authority for approval. In addition, in order to take into account progress in science and technology, the use of alternative arrangements which offer at least equivalent safety in use in respect of compatibility with the properties of the substances carried and equivalent or superior resistance to impact, loading and fire, may be considered by the competent authority.

6.5.1.1.3 The construction, equipment, testing, marking and operation of IBCs shall be subject to acceptance by the competent authority of the country in which the IBCs are approved.

6.5.1.1.4 Manufacturers and subsequent distributors of IBCs shall provide information regarding procedures to be followed and a description of the types and dimensions of closures (including required gaskets) and any other components needed to ensure that IBCs as presented for carriage are capable of passing the applicable performance tests of this Chapter.

6.5.1.2 *(Reserved)*

6.5.1.3 *(Reserved)*

6.5.1.4 *Designatory code system for IBCs*

6.5.1.4.1 The code shall consist of two Arabic numerals as specified in (a), followed by a capital letter(s) specified in (b), followed, when specified in an individual section, by an Arabic numeral indicating the category of IBC.

(a)

Type	For solids, filled or discharged		For liquids
	by gravity	under pressure of more than 10 kPa (0.1 bar)	
Rigid	11	21	31
Flexible	13	-	-

(b) Materials

A. Steel (all types and surface treatments)
B. Aluminium
C. Natural wood
D. Plywood
F. Reconstituted wood
G. Fibreboard
H. Plastics material
L. Textile
M. Paper, multiwall
N. Metal (other than steel or aluminium).

6.5.1.4.2 For composite IBCs, two capital letters in Latin characters shall be used in sequence in the second position of the code. The first shall indicate the material of the inner receptacle of the IBC and the second that of the outer packaging of the IBC.

6.5.1.4.3 The following types and codes of IBC are assigned:

Material	Category	Code	Sub-section
Metal			
A. Steel	for solids, filled or discharged by gravity	11A	6.5.3.1
	for solids, filled or discharged under pressure	21A	
	for liquids	31A	
B. Aluminium	for solids, filled or discharged by gravity	11B	
	for solids, filled or discharged under pressure	21B	
	for liquids	31B	
N. Other than steel or aluminium	for solids, filled or discharged by gravity	11N	
	for solids, filled or discharged under pressure	21N	
	for liquids	31N	
Flexible			
H. Plastics	woven plastics without coating or liner	13H1	6.5.3.2
	woven plastics, coated	13H2	
	woven plastics with liner	13H3	
	woven plastics, coated and with liner	13H4	
	plastics film	13H5	
L. Textile	without coating or liner	13L1	
	coated	13L2	
	with liner	13L3	
	coated and with liner	13L4	
M. Paper	multiwall	13M1	
	multiwall, water resistant	13M2	
H. Rigid plastics	for solids, filled or discharged by gravity, fitted with structural equipment	11H1	6.5.3.3
	for solids, filled or discharged by gravity, freestanding	11H2	
	for solids, filled or discharged under pressure, fitted with structural equipment	21H1	
	for solids, filled or discharged under pressure, freestanding	21H2	
	for liquids, fitted with structural equipment	31H1	
	for liquids, freestanding	31H2	

Material	Category	Code	Sub-section
HZ. Composite with plastics inner receptacle [a]	for solids, filled or discharged by gravity, with rigid plastics inner receptacle	11HZ1	6.5.3.4
	for solids, filled or discharged by gravity, with flexible plastics inner receptacle	11HZ2	
	for solids, filled or discharged under pressure, with rigid plastics inner receptacle	21HZ1	
	for solids, filled or discharged under pressure, with flexible plastics inner receptacle	21HZ2	
	for liquids, with rigid plastics inner receptacle	31HZ1	
	for liquids, with flexible plastics inner receptacle	31HZ2	
G. Fibreboard	for solids, filled or discharged by gravity	11G	6.5.3.5
Wooden			
C. Natural wood	for solids, filled or discharged by gravity with inner liner	11C	6.5.3.6
D. Plywood	for solids, filled or discharged by gravity, with inner liner	11D	
F. Reconstituted wood	for solids, filled or discharged by gravity, with inner liner	11F	

[a] *The code shall be completed by replacing the letter Z by a capital letter in accordance with 6.5.1.4.1 (b) to indicate the nature of the material used for the outer casing.*

6.5.1.4.4 The letter "W" may follow the IBC code. The letter "W" signifies that the IBC, although of the same type indicated by the code, is manufactured to a specification different from those in 6.5.3 and is considered equivalent in accordance with the requirements in 6.5.1.1.2.

6.5.1.5 ***Construction requirements***

6.5.1.5.1 IBCs shall be resistant to or adequately protected from deterioration due to the external environment.

6.5.1.5.2 IBCs shall be so constructed and closed that none of the contents can escape under normal conditions of carriage including the effect of vibration, or by changes in temperature, humidity or pressure.

6.5.1.5.3 IBCs and their closures shall be constructed of materials compatible with their contents, or be protected internally, so that they are not liable:

(a) To be attacked by the contents so as to make their use dangerous;

(b) To cause the contents to react or decompose, or form harmful or dangerous compounds with the IBCs.

6.5.1.5.4 Gaskets, where used, shall be made of materials not subject to attack by the contents of the IBCs.

6.5.1.5.5 All service equipment shall be so positioned or protected as to minimize the risk of escape of the contents owing to damage during handling and carriage.

6.5.1.5.6 IBCs, their attachments and their service and structural equipment shall be designed to withstand, without loss of contents, the internal pressure of the contents and the stresses of normal handling and carriage. IBCs intended for stacking shall be designed for stacking. Any lifting or securing features of IBCs shall be of sufficient strength to withstand the normal conditions of handling and carriage without gross distortion or failure and shall be so positioned that no undue stress is caused in any part of the IBC.

6.5.1.5.7 Where an IBC consists of a body within a framework it shall be so constructed that:

(a) The body does not chafe or rub against the framework so as to cause material damage to the body;

(b) The body is retained within the framework at all times;

(c) The items of equipment are fixed in such a way that they cannot be damaged if the connections between body and frame allow relative expansion or movement.

6.5.1.5.8 Where a bottom discharge valve is fitted, it shall be capable of being made secure in the closed position and the whole discharge system shall be suitably protected from damage. Valves having lever closures shall be able to be secured against accidental opening and the open or closed position shall be readily apparent. For IBCs containing liquids, a secondary means of sealing the discharge aperture shall also be provided, e.g. a blank flange or equivalent device.

6.5.1.5.9 Each IBC shall be capable of passing the relevant performance tests.

6.5.1.6 ***Testing, certification and inspection***

6.5.1.6.1 *Quality assurance*: the IBCs shall be manufactured and tested under a quality assurance programme which satisfies the competent authority, in order to ensure that each manufactured IBC meets the requirements of this Chapter.

6.5.1.6.2 *Test requirements:* IBCs shall be subject to design type tests and, if applicable, to initial and periodic tests in accordance with 6.5.4.14.

6.5.1.6.3 *Certification*: in respect of each design type of IBC a certificate and mark (as in 6.5.2) shall be issued attesting that the design type, including its equipment, meets the test requirements.

6.5.1.6.4 *Inspection*: every metal, rigid plastics and composite IBC shall be inspected to the satisfaction of the competent authority:

(a) before it is put into service, and thereafter at intervals not exceeding five years, with regard to:

(i) conformity to design type including marking;

(ii) internal and external condition;

(iii) proper functioning of service equipment.

Thermal insulation, if any, need be removed only to the extent necessary for a proper examination of the body of the IBC.

(b) at intervals of not more than two and a half years, with regard to:

(i) external condition;

(ii) proper functioning of service equipment.

Thermal insulation, if any, need be removed only to the extent necessary for a proper examination of the body of the IBC.

A report of each inspection shall be kept by the owner of the IBC at least until the next inspection. The report shall include the results of the inspection and shall identify the party performing the inspection (see also the marking requirements in 6.5.2.2.1).

6.5.1.6.5 When an IBC is impaired as a result of impact (e.g. accident) or any other cause, it shall be repaired or otherwise maintained (see definition of *"Routine maintenance of IBCs"* in 1.2.1), so as to conform to the design type. The bodies of rigid plastics IBCs and the inner receptacles of composite IBCs that are impaired shall be replaced.

6.5.1.6.6 *Repaired IBCs*

6.5.1.6.6.1 In addition to any other testing and inspection requirements in ADR, an IBC shall be subjected to the full testing and inspection requirements set out in 6.5.4.14.3 and 6.5.1.6.4 (a), and the required reports shall be prepared, whenever it is repaired.

6.5.1.6.6.2 The Party performing the tests and inspections after the repair shall durably mark the IBC near the manufacturer's UN design type marking to show:

(a) the State in which the tests and inspections were carried out;

(b) the name or authorized symbol of the party performing the tests and inspections; and

(c) the date (month, year) of the tests and inspections.

6.5.1.6.6.3 Test and inspections performed in accordance with 6.5.1.6.6.1 may be considered to satisfy the requirements for the two and a half and five year periodic tests and inspections.

6.5.1.6.7 The competent authority may at any time require proof, by tests in accordance with this Chapter, that IBCs meet the requirements of the design type tests.

6.5.2 Marking

6.5.2.1 *Primary marking*

6.5.2.1.1 Each IBC manufactured and intended for use according to ADR shall bear markings which are durable, legible and placed in a location so as to be readily visible. Letters, numerals and symbols shall be at least 12 mm high and shall show:

(a) The United Nations packaging symbol:

For metal IBCs on which the marking is stamped or embossed, the capital letters "UN" may be applied instead of the symbol;

(b) The code designating the type of IBC according to 6.5.1.4;

(c) A capital letter designating the packing group(s) for which the design type has been approved:

(i) X for packing groups I, II and III (IBCs for solids only);

(ii) Y for packing groups II and III;

(iii) Z for packing group III only;

(d) The month and year (last two digits) of manufacture;

(e) The State authorizing the allocation of the mark; indicated by the distinguishing sign for motor vehicles in international traffic [1];

(f) The name or symbol of the manufacturer and other identification of the IBC as specified by the competent authority;

(g) The stacking test load in kg. For IBCs not designed for stacking, the figure "0" shall be shown;

(h) The maximum permissible gross mass in kg.

The primary marking required above shall be applied in the sequence of the subparagraphs below. The marking required by 6.5.2.2 and any further marking authorized by a competent authority shall still enable the parts of the mark to be correctly identified.

Each element of the marking applied in accordance with (a) to (h) and with 6.5.2.2 shall be clearly separated, e.g. by a slash or space, so as to be easily identifiable.

6.5.2.1.2 Examples of markings for various types of IBC in accordance with 6.5.2.1.1 (a) to (h) above:

u n	11A/Y/02 99 NL/Mulder 007 5500/1500	For a metal IBC for solids discharged for instance by gravity and made from steel/for packing groups II and III/ manufactured in February 1989/authorized by the Netherlands/manufactured by Mulder and of a design type to which the competent authority has allocated serial number 007/the stacking test load in kg/the maximum permissible gross mass in kg.
u n	13H3/Z/03 01 F/Meunier 1713 0/1500	For a flexible IBC for solids discharged for instance by gravity and made from woven plastics with a liner/not designed to be stacked.
u n	31H1/Y/04 99 GB/9099 10800/1200	For a rigid plastics IBC for liquids made from plastics with structural equipment withstanding the stack load.
u n	31HA1/Y/05 01 D/Muller 1683 10800/1200	For a composite IBC for liquids with a rigid plastics inner receptacle and a steel outer casing.
u n	11C/X/01 02 S/Aurigny 9876 3000/910	For a wooden IBC for solids with an inner liner authorized for packing group I solids.

[1] *Distinguishing sign for motor vehicles in international traffic prescribed in Vienna Convention on Road Traffic (1968).*

6.5.2.2 ***Additional marking***

6.5.2.2.1 Each IBC shall bear the markings required in 6.5.2.1 and, in addition, the following information which may appear on a corrosion-resistant plate permanently attached in a place readily accessible for inspection:

Additional marking	Category of IBC				
	Metal	**Rigid plastics**	**Composite**	**Fibreboard**	**Wooden**
Capacity in litres [a] at 20 °C	X	X	X		
Tare mass in kg [a]	X	X	X	X	X
Test (gauge) pressure, in kPa or bar [a], if applicable		X	X		
Maximum filling / discharge pressure in kPa or bar [a] , if applicable	X	X	X		
Body material and its minimum thickness in mm	X				
Date of last leakproofness test, if applicable (month and year)	X	X	X		
Date of last inspection (month and year)	X	X	X		
Serial number of the manufacturer	X				

[a] *The unit used shall be indicated.*

6.5.2.2.2 In addition to the markings required in 6.5.2.1, flexible IBCs may bear a pictogram indicating recommended lifting methods.

6.5.2.2.3 The inner receptacle of composite IBCs shall be marked with at least the following information:

(a) The name or symbol of the manufacturer and other identification of the IBC as specified by the competent authority as in 6.5.2.1.1 (f);

(b) The date of manufacture, as in 6.5.2.1.1 (d);

(c) The distinguishing sign of the State authorizing the allocation of the mark, as in 6.5.2.1.1 (e).

6.5.2.2.4 Where a composite IBCs is designed in such a manner that the outer casing is intended to be dismantled for carriage when empty (such as for return of the IBC for reuse to the original consignor), each of the parts intended to be detached when so dismantled shall be marked with the month and year of manufacture and the name or symbol of the manufacturer and other identification of the IBC as specified by the competent authority (see 6.5.2.1.1 (f)).

6.5.2.3 ***Conformity to design type***

The marking indicates that IBCs correspond to a successfully tested design type and that the requirements referred to in the certificate have been met.

6.5.3 Specific requirements for IBCs

6.5.3.1 *Specific requirements for metal IBCs*

6.5.3.1.1 These requirements apply to metal IBCs intended for the carriage of solids and liquids. There are three categories of metal IBCs:

(a) those for solids which are filled or discharged by gravity (11A, 11B, 11N);

(b) those for solids which are filled or discharged at a gauge pressure greater than 10 kPa (0.1 bar) (21A, 21B, 21N); and

(c) those for liquids (31A, 31B, 31N).

6.5.3.1.2 Bodies shall be made of suitable ductile metal in which the weldability has been fully demonstrated. Welds shall be skilfully made and afford complete safety. Low-temperature performance of the material shall be taken into account when appropriate.

6.5.3.1.3 Care shall be taken to avoid damage by galvanic action due to the juxtaposition of dissimilar metals.

6.5.3.1.4 Aluminium IBCs intended for the carriage of flammable liquids shall have no movable parts, such as covers, closures, etc., made of unprotected steel liable to rust, which might cause a dangerous reaction by coming into frictional or percussive contact with the aluminium.

6.5.3.1.5 Metal IBCs shall be made of metals which meet the following requirements:

(a) for steel the elongation at fracture, in %, shall not be less than $\frac{10000}{Rm}$ with an absolute minimum of 20%;

where Rm = guaranteed minimum tensile strength of the steel to be used, in N/mm^2;

(b) for aluminium and its alloy the elongation at fracture, in %, shall not be less than $\frac{10000}{6Rm}$ with an absolute minimum of 8%.

Specimens used to determine the elongation at fracture shall be taken transversely to the direction of rolling and be so secured that:

$L_o = 5d$ or

$L_o = 5.65\sqrt{A}$

where: L_o = gauge length of the specimen before the test

d = diameter

A = cross-sectional area of test specimen.

6.5.3.1.6 *Minimum wall thickness:*

(a) for a reference steel having a product of Rm H A_o = 10 000, the wall thickness shall not be less than:

Capacity (C) in litres	Wall thickness (T) in mm			
	Types 11A, 11B, 11N		Types 21A, 21B, 21N, 31A, 31B, 31N	
	Unprotected	Protected	Unprotected	Protected
C ≤ 1000	2.0	1.5	2.5	2.0
1000 < C ≤ 2000	T = C/2000 + 1.5	T = C/2000 + 1.0	T = C/2000 + 2.0	T = C/2000 + 1.5
2000 < C ≤ 3000	T = C/2000 + 1.5	T = C/2000 + 1.0	T = C/1000 + 1.0	T = C/2000 + 1.5

where: A_o = minimum elongation (as a percentage) of the reference steel to be used on fracture under tensile stress (see 6.5.3.1.5);

(b) for metals other than the reference steel described in (a), the minimum wall thickness is given by the following equivalence formula:

$$e_1 = \frac{21.4 \times e_0}{\sqrt[3]{Rm_1 \times A_1}}$$

where: e_1 = required equivalent wall thickness of the metal to be used (in mm);

e_0 = required minimum wall thickness for the reference steel (in mm);

Rm_1 = guaranteed minimum tensile strength of the metal to be used (in N/mm^2) (see (c));

A_1 = minimum elongation (as a percentage) of the metal to be used on fracture under tensile stress (see 6.5.3.1.5).

However, in no case shall the wall thickness be less than 1.5 mm.

(c) For purposes of the calculation described in (b), the guaranteed minimum tensile strength of the metal to be used (Rm_1) shall be the minimum value according to national or international material standards. However, for austenitic steels, the specified value for Rm according to the material standards may be increased by up to 15% when a greater value is attested in the material inspection certificate. When no material standard exists for the material in question, the value of Rm shall be the minimum value attested in the material inspection certificate.

6.5.3.1.7 Pressure-relief requirements: IBCs for liquids shall be capable of releasing a sufficient amount of vapour in the event of fire engulfment to ensure that no rupture of the body will occur. This can be achieved by conventional pressure relief devices or by other constructional means. The start-to-discharge pressure shall not be higher than 65 kPa (0.65 bar) and no lower than the total gauge pressure experienced in the IBC (i.e. the vapour pressure of the filling substance plus the partial pressure of the air or other inert gases, minus 100 kPa (1 bar)) at 55 °C, determined on the basis of a maximum degree of filling as defined in 4.1.1.4. The required relief devices shall be fitted in the vapour space.

6.5.3.2 ***Specific requirements for flexible IBCs***

6.5.3.2.1 These requirements apply to flexible IBCs of the following types:

13H1	woven plastics without coating or liner
13H2	woven plastics, coated
13H3	woven plastics with liner
13H4	woven plastics, coated and with liner
13H5	plastics film
13L1	textile without coating or liner
13L2	textile, coated
13L3	textile with liner
13L4	textile, coated and with liner
13M1	paper, multiwall
13M2	paper, multiwall, water resistant

Flexible IBCs are intended for the carriage of solids only.

6.5.3.2.2 Bodies shall be manufactured from suitable materials. The strength of the material and the construction of the flexible IBC shall be appropriate to its capacity and its intended use.

6.5.3.2.3 All materials used in the construction of flexible IBCs of types 13M1 and 13M2 shall, after complete immersion in water for not less than 24 hours, retain at least 85% of the tensile strength as measured originally on the material conditioned to equilibrium at 67% relative humidity or less.

6.5.3.2.4 Seams shall be formed by stitching, heat sealing, gluing or any equivalent method. All stitched seam-ends shall be secured.

6.5.3.2.5 Flexible IBCs shall provide adequate resistance to ageing and to degradation caused by ultraviolet radiation or the climatic conditions, or by the substance contained, thereby rendering them appropriate to their intended use.

6.5.3.2.6 For flexible plastics IBCs where protection against ultraviolet radiation is required, it shall be provided by the addition of carbon black or other suitable pigments or inhibitors. These additives shall be compatible with the contents and remain effective throughout the life of the body. Where use is made of carbon black, pigments or inhibitors other than those used in the manufacture of the tested design type, re-testing may be waived if changes in the carbon black content, the pigment content or the inhibitor content do not adversely affect the physical properties of the material of construction.

6.5.3.2.7 Additives may be incorporated into the material of the body to improve the resistance to ageing or to serve other purposes, provided that these do not adversely affect the physical or chemical properties of the material.

6.5.3.2.8 No material recovered from used receptacles shall be used in the manufacture of IBC bodies. Production residues or scrap from the same manufacturing process may, however, be used. Component parts such as fittings and pallet bases may also be used provided such components have not in any way been damaged in previous use.

6.5.3.2.9 When filled, the ratio of height to width shall be not more than 2:1.

6.5.3.2.10 The liner shall be made of a suitable material. The strength of the material used and the construction of the liner shall be appropriate to the capacity of the IBC and the intended use. Joins and closures shall be siftproof and capable of withstanding pressures and impacts liable to occur under normal conditions of handling and carriage.

6.5.3.3 ***Specific requirements for rigid plastics IBCs***

6.5.3.3.1 These requirements apply to rigid plastics IBCs for the carriage of solids or liquids. Rigid plastics IBCs are of the following types:

11H1 fitted with structural equipment designed to withstand the whole load when IBCs are stacked, for solids which are filled or discharged by gravity
11H2 freestanding, for solids which are filled or discharged by gravity
21H1 fitted with structural equipment designed to withstand the whole load when IBCs are stacked, for solids which are filled or discharged under pressure
21H2 freestanding, for solids which are filled or discharged under pressure
31H1 fitted with structural equipment designed to withstand the whole load when IBCs are stacked, for liquids
31H2 freestanding, for liquids.

6.5.3.3.2 The body shall be manufactured from suitable plastics material of known specifications and be of adequate strength in relation to its capacity and its intended use. The material shall be adequately resistant to ageing and to degradation caused by the substance contained or, where relevant, by ultraviolet radiation. Low temperature performance shall be taken into account when appropriate. Any permeation of the substance contained shall not constitute a danger under normal conditions of carriage.

6.5.3.3.3 Where protection against ultraviolet radiation is required, it shall be provided by the addition of carbon black or other suitable pigments or inhibitors. These additives shall be compatible with the contents and remain effective throughout the life of the body. Where use is made of carbon black, pigments or inhibitors other than those used in the manufacture of the tested design type, re-testing may be waived if changes in the carbon black content, the pigment content or the inhibitor content do not adversely affect the physical properties of the material of construction.

6.5.3.3.4 Additives may be incorporated in the material of the body to improve the resistance to ageing or to serve other purposes, provided that these do not adversely affect the physical or chemical properties of the material.

6.5.3.3.5 No used material other than production residues or regrind from the same manufacturing process may be used in the manufacture of rigid plastics IBCs.

6.5.3.4 ***Specific requirements for composite IBCs with plastics inner receptacles***

6.5.3.4.1 These requirements apply to composite IBCs for the carriage of solids and liquids of the following types:

11HZ1 Composite IBCs with a rigid plastics inner receptacle, for solids filled or discharged by gravity
11HZ2 Composite IBCs with a flexible plastics inner receptacle, for solids filled or discharged by gravity
21HZ1 Composite IBCs with a rigid plastics inner receptacle, for solids filled or discharged under pressure
21HZ2 Composite IBCs with a flexible plastics inner receptacle, for solids filled or discharged under pressure
31HZ1 Composite IBCs with a rigid plastics inner receptacle, for liquids
31HZ2 Composite IBCs with a flexible plastics inner receptacle, for liquids.

This code shall be completed by replacing the letter Z by a capital letter in accordance with 6.5.1.4.1 (b) to indicate the nature of the material used for the outer casing.

6.5.3.4.2 The inner receptacle is not intended to perform a containment function without its outer casing. A "rigid" inner receptacle is a receptacle which retains its general shape when empty without closures in place and without benefit of the outer casing. Any inner receptacle that is not "rigid" is considered to be "flexible".

6.5.3.4.3 The outer casing normally consists of rigid material formed so as to protect the inner receptacle from physical damage during handling and carriage but is not intended to perform the containment function. It includes the base pallet where appropriate.

6.5.3.4.4 A composite IBC with a fully enclosing outer casing shall be so designed that the integrity of the inner receptacle may be readily assessed following the leakproofness and hydraulic pressure tests.

6.5.3.4.5 IBCs of type 31HZ2 shall be limited to a capacity of not more than 1 250 litres.

6.5.3.4.6 The inner receptacle shall be manufactured from suitable plastics material of known specifications and be of adequate strength in relation to its capacity and its intended use. The material shall be adequately resistant to ageing and to degradation caused by the substance contained or, where relevant, by ultraviolet radiation. Low temperature performance shall be taken into account when appropriate. Any permeation of the substance contained shall not constitute a danger under normal conditions of carriage.

6.5.3.4.7 Where protection against ultraviolet radiation is required, it shall be provided by the addition of carbon black or other suitable pigments or inhibitors. These additives shall be compatible with the contents and remain effective throughout the life of the inner receptacle. Where use is made of carbon black, pigments or inhibitors, other than those used in the manufacture of the tested design type, retesting may be waived if changes in carbon black content, the pigment content or the inhibitor content do not adversely affect the physical properties of the material of construction.

6.5.3.4.8 Additives may be incorporated in the material of the inner receptacle to improve the resistance to ageing or to serve other purposes, provided that these do not adversely affect the physical or chemical properties of the material.

6.5.3.4.9 No used material other than production residues or regrind from the same manufacturing process may be used in the manufacture of inner receptacles.

6.5.3.4.10 The inner receptacle of IBCs type 31HZ2 shall consist of at least three plies of film.

6.5.3.4.11 The strength of the material and the construction of the outer casing shall be appropriate to the capacity of the composite IBC and its intended use.

6.5.3.4.12 The outer casing shall be free of any projection that might damage the inner receptacle.

6.5.3.4.13 Metal outer casings shall be constructed of a suitable metal of adequate thickness.

6.5.3.4.14 Outer casings of natural wood shall be of well seasoned wood, commercially dry and free from defects that would materially lessen the strength of any part of the casing. The tops and bottoms may be made of water resistant reconstituted wood such as hardboard, particle board or other suitable type.

6.5.3.4.15 Outer casings of plywood shall be made of well seasoned rotary cut, sliced or sawn veneer, commercially dry and free from defects that would materially lessen the strength of the casing. All adjacent plies shall be glued with water resistant adhesive. Other suitable materials may be used with plywood for the construction of casings. Casings shall be firmly nailed or secured to corner posts or ends or be assembled by equally suitable devices.

6.5.3.4.16 The walls of outer casings of reconstituted wood shall be made of water resistant reconstituted wood such as hardboard, particle board or other suitable type. Other parts of the casings may be made of other suitable material.

6.5.3.4.17 For fibreboard outer casings, strong and good quality solid or double-faced corrugated fibreboard (single or multiwall) shall be used appropriate to the capacity of the casing and to its intended use. The water resistance of the outer surface shall be such that the increase in mass, as determined in a test carried out over 30 minutes by the Cobb method of determining water absorption, is not greater than 155 g/m^2 (see ISO 535:1991). It shall have proper bending qualities. Fibreboard shall be cut, creased without scoring, and slotted so as to permit assembly without cracking, surface breaks or undue bending. The fluting of corrugated fibreboard shall be firmly glued to the facings.

6.5.3.4.18 The ends of fibreboard outer casings may have a wooden frame or be entirely of wood. Reinforcements of wooden battens may be used.

6.5.3.4.19 Manufacturing joins in the fibreboard outer casing shall be taped, lapped and glued, or lapped and stitched with metal staples. Lapped joins shall have an appropriate overlap. Where closing is effected by gluing or taping, a water resistant adhesive shall be used.

6.5.3.4.2. Where the outer casing is of plastics material, the relevant requirements of 6.5.3.4.6 to 6.5.3.4.9 apply, on the understanding that, in this case, the requirements applicable to the inner receptacle are applicable to the outer casing of composite IBCs.

6.5.3.4.21 The outer casing of an IBC type 31HZ2 shall enclose the inner receptacle on all sides.

6.5.3.4.22 Any integral pallet base forming part of an IBC or any detachable pallet shall be suitable for mechanical handling with the IBC filled to its maximum permissible gross mass.

6.5.3.4.23 The pallet or integral base shall be designed so as to avoid any protrusion of the base of the IBC that might be liable to damage in handling.

6.5.3.4.24 The outer casing shall be secured to any detachable pallet to ensure stability in handling and carriage. Where a detachable pallet is used, its top surface shall be free from sharp protrusions that might damage the IBC.

6.5.3.4.25 Strengthening devices such as timber supports to increase stacking performance may be used but shall be external to the inner receptacle.

6.5.3.4.26 Where IBCs are intended for stacking, the bearing surface shall be such as to distribute the load in a safe manner. Such IBCs shall be designed so that the load is not supported by the inner receptacle.

6.5.3.5 ***Specific requirements for fibreboard IBCs***

6.5.3.5.1 These requirements apply to fibreboard IBCs for the carriage of solids which are filled or discharged by gravity. Fibreboard IBCs are of the following type: 11G.

6.5.3.5.2 Fibreboard IBCs shall not incorporate top lifting devices.

6.5.3.5.3 The body shall be made of strong and good quality solid or double-faced corrugated fibreboard (single or multiwall), appropriate to the capacity of the IBC and to its intended use. The water resistance of the outer surface shall be such that the increase in mass, as determined in a test carried out over a period of 30 minutes by the Cobb method of determining water absorption, is not greater than 155 g/m^2 (see ISO 535:1991). It shall have proper bending qualities. Fibreboard shall be cut, creased without scoring, and slotted so as

to permit assembly without cracking, surface breaks or undue bending. The fluting or corrugated fibreboard shall be firmly glued to the facings.

6.5.3.5.4 The walls, including top and bottom, shall have a minimum puncture resistance of 15 J measured according to ISO 3036:1975.

6.5.3.5.5 Manufacturing joins in the body of IBCs shall be made with an appropriate overlap and shall be taped, glued, stitched with metal staples or fastened by other means at least equally effective. Where joins are effected by gluing or taping, a water resistant adhesive shall be used. Metal staples shall pass completely through all pieces to be fastened and be formed or protected so that any inner liner cannot be abraded or punctured by them.

6.5.3.5.6 The liner shall be made of a suitable material. The strength of the material used and the construction of the liner shall be appropriate to the capacity of the IBC and the intended use. Joins and closures shall be siftproof and capable of withstanding pressures and impacts liable to occur under normal conditions of handling and carriage.

6.5.3.5.7 Any integral pallet base forming part of an IBC or any detachable pallet shall be suitable for mechanical handling with the IBC filled to its maximum permissible gross mass.

6.5.3.5.8 The pallet or integral base shall be designed so as to avoid any protrusion of the base of the IBC that might be liable to damage in handling.

6.5.3.5.9 The body shall be secured to any detachable pallet to ensure stability in handling and carriage. Where a detachable pallet is used, its top surface shall be free from sharp protrusions that might damage the IBC.

6.5.3.5.10 Strengthening devices such as timber supports to increase stacking performance may be used but shall be external to the liner.

6.5.3.5.11 Where IBCs are intended for stacking, the bearing surface shall be such as to distribute the load in a safe manner.

6.5.3.6 ***Specific requirements for wooden IBCs***

6.5.3.6.1 These requirements apply to wooden IBCs for the carriage of solids which are filled or discharged by gravity. Wooden IBCs are of the following types:

11C Natural wood with inner liner
11D Plywood with inner liner
11F Reconstituted wood with inner liner.

6.5.3.6.2 Wooden IBCs shall not incorporate top lifting devices.

6.5.3.6.3 The strength of the materials used and the method of construction of the body shall be appropriate to the capacity and intended use of the IBC.

6.5.3.6.4 Natural wood shall be well seasoned, commercially dry and free from defects that would materially lessen the strength of any part of the IBC. Each part of the IBC shall consist of one piece or be equivalent thereto. Parts are considered equivalent to one piece when a suitable method of glued assembly is used (as for instance Lindermann joint, tongue and groove joint, ship lap or rabbet joint); or butt joint with at least two corrugated metal fasteners at each joint, or when other methods at least equally effective are used.

6.5.3.6.5 Bodies of plywood shall be at least 3-ply. They shall be made of well seasoned rotary cut, sliced or sawn veneer, commercially dry and free from defects that would materially lessen the strength of the body. All adjacent plies shall be glued with water resistant adhesive. Other suitable materials may be used with plywood for the construction of the body.

6.5.3.6.6 Bodies of reconstituted wood shall be made of water resistant reconstituted wood such as hardboard, particle board or other suitable type.

6.5.3.6.7 IBCs shall be firmly nailed or secured to corner posts or ends or be assembled by equally suitable devices.

6.5.3.6.8 The liner shall be made of a suitable material. The strength of the material used and the construction of the liner shall be appropriate to the capacity of the IBC and the intended use. Joins and closures shall be siftproof and capable of withstanding pressures and impacts liable to occur under normal conditions of handling and carriage.

6.5.3.6.9 Any integral pallet base forming part of an IBC or any detachable pallet shall be suitable for mechanical handling with the IBC filled to its maximum permissible gross mass.

6.5.3.6.10 The pallet or integral base shall be designed so as to avoid any protrusion of the base of the IBC that might be liable to damage in handling.

6.5.3.6.11 The body shall be secured to any detachable pallet to ensure stability in handling and carriage. Where a detachable pallet is used, its top surface shall be free from sharp protrusions that might damage the IBC.

6.5.3.6.12 Strengthening devices such as timber supports to increase stacking performance may be used but shall be external to the liner.

6.5.3.6.13 Where IBCs are intended for stacking, the bearing surface shall be such as to distribute the load in a safe manner.

6.5.4 Test requirements for IBCs

6.5.4.1 *Performance and frequency of tests*

6.5.4.1.1 The design type of each IBC shall be tested in accordance with procedures established and approved by the competent authority for each IBC design type before such an IBC is used. An IBC design type is defined by the design, size, material and thickness, manner of construction and means of filling and discharging but may include various surface treatments. It also includes IBCs which differ from the design type only in their lesser external dimensions.

6.5.4.1.2 Tests shall be carried out on IBCs prepared for carriage. IBCs shall be filled as indicated in the relevant sections. The substances to be carried in the IBCs may be replaced by other substances except where this would invalidate the results of the tests. For solids, when another substance is used it shall have the same physical characteristics (mass, grain size, etc.) as the substance to be carried. It is permissible to use additives, such as bags of lead shot, to achieve the requisite total package mass, so long as they are placed so that the test results are not affected.

6.5.4.1.3 In the drop tests for liquids, when another substance is used, its relative density and viscosity shall be similar to those of the substance to be carried. Water may also be used for the liquid drop test under the following conditions:

(a) where the substances to be carried have a relative density not exceeding 1.2, the drop heights shall be those shown in the table in 6.5.4.9.4;

(b) where the substances to be carried have a relative density exceeding 1.2, the drop heights shall be calculated on the basis of the relative density (d) of the substance to be carried rounded up to the first decimal as follows:

Packing group I	Packing group II	Packing group III
d H 1.5 m	d H 1.0 m	d H 0.67 m

6.5.4.2 ***Design type tests***

6.5.4.2.1 One IBC of each design type, size, wall thickness and manner of construction shall be submitted to the tests listed in the order shown in 6.5.4.3.5 and as set out in 6.5.4.5 to 6.5.4.12. These design type tests shall be carried out as required by the competent authority.

6.5.4.2.2 To prove sufficient chemical compatibility with the contained goods or standard liquids in accordance with 6.5.4.3.3 or 6.5.4.3.5 for rigid plastics IBCs of type 31H2 and for composite IBCs of types 31HH1 and 31HH2, a second IBC can be used when the IBCs are designed to be stacked. In such case both IBCs shall be subjected to a preliminary storage.

6.5.4.2.3 The competent authority may permit the selective testing of IBCs which differ only in minor respects from a tested type, e.g. with small reductions in external dimensions.

6.5.4.2.4 If detachable pallets are used in the tests, the test report issued in accordance with 6.5.4.13 shall include a technical description of the pallets used.

6.5.4.3 ***Preparation of IBCs for testing***

6.5.4.3.1 Paper and fibreboard IBCs and composite IBCs with fibreboard outer casings shall be conditioned for at least 24 hours in an atmosphere having a controlled temperature and relative humidity (r.h.). There are three options, one of which shall be chosen. The preferred atmosphere is 23 ± 2 °C and 50% ± 2% r.h. The two other options are 20 ± 2 °C and 65% ± 2% r.h.; or 27 ± 2 °C and 65% ± 2% r.h.

NOTE: *Average values shall fall within these limits. Short-term fluctuations and measurement limitations may cause individual measurements to vary by up to ± 5% relative humidity without significant impairment of test reproducibility.*

6.5.4.3.2 Additional steps shall be taken to ascertain that the plastics material used in the manufacture of rigid plastics IBCs (types 31H1 and 31H2) and composite IBCs (types 31HZ1 and 31HZ2) complies respectively with the requirements in 6.5.3.3.2 to 6.5.3.3.4 and 6.5.3.4.6 to 6.5.3.4.9.

6.5.4.3.3 To prove there is sufficient chemical compatibility with the contained goods, the sample IBC shall be subjected to a preliminary storage for six months, during which the samples shall remain filled with the substances they are intended to contain or with substances which are known to have at least as severe a stress-cracking, weakening or molecular degradation influence on the plastics materials in question, and after which the samples shall be submitted to the applicable tests listed in the table in 6.5.4.3.5.

6.5.4.3.4 Where the satisfactory behaviour of the plastics material has been established by other means, the above compatibility test may be dispensed with. Such procedures shall be at least equivalent to the above compatibility test and recognized by the competent authority.

6.5.4.3.5 For high molecular mass polyethylene rigid plastics IBCs (types 31H1 and 31H2) in accordance with 6.5.3.3 and composite IBCs (types 31HZ1 and 31HZ2) in accordance with 6.5.3.4, conforming to the following specifications:

- relative density at 23 °C after thermal conditioning for one hour at 100 °C ≥ 0.940, in accordance with ISO Standard 1183,

- melt flow rate at 190 °C/21.6 kg load ≤ 12 g/10 min, in accordance with ISO Standard 1133,

chemical compatibility with filling liquids assimilated in accordance with 4.1.1.19 may be verified as follows with standard liquids (see 6.1.6).

The standard liquids are representative for the processes of deterioration on high molecular mass polyethylene, as there are softening through swelling, cracking under stress, molecular degradation and combinations thereof.

The sufficient chemical compatibility of the IBCs may be verified by storage of the required test samples for three weeks at 40 °C with the appropriate standard liquid(s); where this standard liquid is water, storage in accordance with this procedure is not required. After this storage, the test samples shall undergo the tests prescribed in 6.5.4.4 to 6.5.4.9.

The compatibility test for tert-Butyl hydroperoxide with more than 40% peroxide content and peroxyacetic acids of Class 5.2 shall not be carried out using standard liquids. For these substances, sufficient chemical compatibility of the test samples shall be verified during a storage period of six months at ambient temperature with the substances they are intended to carry.

Results of the procedure in accordance with this paragraph from high density, high molecular mass polyethylene IBCs can be approved for an equal design type, the internal surface of which is fluorinated.

6.5.4.3.6 For IBC design types, made of high molecular mass polyethylene, as specified in 6.5.4.3.5, which have passed the test in 6.5.4.3.5, the chemical compatibility with filling substances may also be verified by laboratory tests proving that the effect of such filling substances on the test specimens is less than that of the appropriate standard liquid(s) taking into account the relevant processes of deterioration. The same conditions as those set out in 4.1.1.19.2 shall apply with respect to relative density and vapour pressure.

6.5.4.3.7 *Design type tests required and sequential order*

Type of IBC	Bottom lift	Top lift [a]	Stacking[b]	Leak-proofness	Hydraulic pressure	Drop	Tear	Topple	Righting[c]
Metal: 11A, 11B, 11N,	1st [a]	2nd	3rd	-	-	4th [e]	-	-	-
21A, 21B, 21N, 31A, 31B, 31N	1st [a]	2nd	3rd	4th	5th	6th [e]	-	-	-
Flexible [d]	-	x [c]	x	-	-	x	x	x	x
Rigid plastics: 11H1, 11H2,	1st [a]	2nd	3rd	-	-	4th	-	-	-
21H1, 21H2, 31H1, 31H2	1st [a]	2nd	3rd [f]	4th	5th	6th	-	-	-
Composite: 11HZ1, 11HZ2,	1st [a]	2nd	3rd	-	-	4th [e]	-	-	-
21HZ1, 21HZ2, 31HZ1, 31HZ2	1st [a]	2nd	3rd [f]	4th	5th	6th [e]	-	-	-
Fibreboard	1st	-	2nd	-	-	3rd	-	-	-
Wooden	1st	-	2nd	-	-	3rd	-	-	-

[a] *When IBCs are designed for this method of handling.*

[b] *When IBCs are designed to be stacked.*

[c] *When IBCs are designed to be lifted from the top or the side.*

[d] *Required test indicated by x; an IBC which has passed one test may be used for other tests, in any order.*

[e] *Another IBC of the same design may be used for the drop test.*

[f] *The second IBC in accordance with 6.5.4.2.2 can be used out of the sequential order direct after the preliminary storage.*

6.5.4.4 *Bottom lift test*

6.5.4.4.1 *Applicability*

For all fibreboard and wooden IBCs, and for all types of IBC which are fitted with means of lifting from the base, as a design type test.

6.5.4.4.2 *Preparation of the IBC for test*

The IBC shall be filled. A load shall be added and evenly distributed. The mass of the filled IBC and the load shall be 1.25 times the maximum permissible gross mass.

6.5.4.4.3 *Method of testing*

The IBC shall be raised and lowered twice by a lift truck with the forks centrally positioned and spaced at three quarters of the dimension of the side of entry (unless the points of entry are fixed). The forks shall penetrate to three quarters of the direction of entry. The test shall be repeated from each possible direction of entry.

6.5.4.4.4 *Criteria for passing the test*

No permanent deformation which renders the IBC, including the base pallet, if any, unsafe for carriage and no loss of contents.

6.5.4.5 *Top lift test*

6.5.4.5.1 *Applicability*

For all types of IBC which are designed to be lifted from the top and for flexible IBCs designed to be lifted from the top or the side, as a design type test.

6.5.4.5.2 *Preparation of the IBC for test*

Metal, rigid plastics and composite IBCs shall be filled. A load shall be added and evenly distributed. The mass of the filled IBC and the load shall be twice the maximum permissible gross mass. Flexible IBCs shall be filled to six times their maximum permissible load, the load being evenly distributed.

6.5.4.5.3 *Methods of testing*

Metal and flexible IBCs shall be lifted in the manner for which they are designed until clear of the floor and maintained in that position for a period of five minutes.

Rigid plastics and composite IBCs shall be lifted:

(a) by each pair of diagonally opposite lifting devices, so that the hoisting forces are applied vertically, for a period of five minutes; and

(b) by each pair of diagonally opposite lifting devices, so that the hoisting forces are applied toward the centre at 45º to the vertical, for a period of five minutes.

6.5.4.5.4 Other methods of top lift testing and preparation at least equally effective may be used for flexible IBCs.

6.5.4.5.5 *Criteria for passing the test*

(a) Metal, rigid plastics and composite IBCs: no permanent deformation which renders the IBC, including the base pallet, if any, unsafe for carriage and no loss of contents.

(b) Flexible IBCs: no damage to the IBC or its lifting devices which renders the IBC unsafe for carriage or handling.

6.5.4.6 ***Stacking test***

6.5.4.6.1 *Applicability*

For all types of IBC which are designed to be stacked on each other, as a design type test.

6.5.4.6.2 *Preparation of the IBC for test*

The IBC shall be filled to its maximum permissible gross mass. If the specific gravity of the product being used for testing makes this impracticable, the IBC shall additionally be loaded so that it is tested at its maximum permissible gross mass the load being evenly distributed.

6.5.4.6.3 *Method of testing*

(a) The IBC shall be placed on its base on level hard ground and subjected to a uniformly distributed superimposed test load (see 6.5.4.6.4). For rigid plastics IBCs of type 31H2 and composite IBCs of types 31HH1 and 31HH2, a stacking test shall be carried out with the original filling substance or a standard liquid (see 6.1.6) in accordance with 6.5.4.3.3 or 6.5.4.3.5 using the second IBC in accordance with 6.5.4.2.2 after the preliminary storage. IBCs shall be subjected to the test load for a period of at least:

(i) 5 minutes, for metal IBCs;

(ii) 28 days at 40 ºC, for rigid plastics IBCs of types 11H2, 21H2 and 31H2 and for composite IBCs with outer casings of plastics material which bear the stacking load (i.e., types 11HH1, 11HH2, 21HH1, 21HH2, 31HH1 and 31HH2);

(iii) 24 hours, for all other types of IBCs;

(b) The load shall be applied by one of the following methods:

(i) one or more IBCs of the same type filled to the maximum permissible gross mass stacked on the test IBC;

(ii) appropriate weights loaded on to either a flat plate or a reproduction of the base of the IBC, which is stacked on the test IBC.

6.5.4.6.4 *Calculation of superimposed test load*

The load to be placed on the IBC shall be 1.8 times the combined maximum permissible gross mass of the number of similar IBCs that may be stacked on top of the IBC during carriage.

6.5.4.6.5 *Criteria for passing the test*

(a) All types of IBC other than flexible IBCs: no permanent deformation which renders the IBC including the base pallet, if any, unsafe for carriage and no loss of contents;

(b) Flexible IBCs: no deterioration of the body which renders the IBC unsafe for carriage and no loss of contents.

6.5.4.7 *Leakproofness test*

6.5.4.7.1 *Applicability*

For those types of IBC used for liquids or for solids filled or discharged under pressure, as a design type test and periodic test.

6.5.4.7.2 *Preparation of the IBC for test*

The test shall be carried out before the fitting of any thermal insulation equipment. Vented closures shall either be replaced by similar non-vented closures or the vent shall be sealed.

6.5.4.7.3 *Method of testing and pressure to be applied*

The test shall be carried out for a period of at least 10 minutes using air at a gauge pressure of not less than 20 kPa (0.2 bar). The air tightness of the IBC shall be determined by a suitable method such as by air-pressure differential test or by immersing the IBC in water or, for metal IBCs, by coating the seams and joints with a soap solution. In the case of immersing a correction factor shall be applied for the hydrostatic pressure. Other methods at least equally effective may be used.

6.5.4.7.4 *Criterion for passing the test*

No leakage of air.

6.5.4.8 *Internal pressure (hydraulic) test*

6.5.4.8.1 *Applicability*

For those types of IBCs used for liquids or for solids filled or discharged under pressure, as a design type test.

6.5.4.8.2 *Preparation of the IBC for test*

The test shall be carried out before the fitting of any thermal insulation equipment. Pressure-relief devices shall be removed and their apertures plugged, or shall be rendered inoperative.

6.5.4.8.3 *Method of testing*

The test shall be carried out for a period of at least 10 minutes applying a hydraulic pressure not less than that indicated in 6.5.4.8.4. The IBCs shall not be mechanically restrained during the test.

6.5.4.8.4 *Pressures to be applied*

6.5.4.8.4.1 Metal IBCs:

(a) For IBCs of types 21A, 21B and 21N, for packing group I solids, a 250 kPa (2.5 bar) gauge pressure;

(b) For IBCs of types 21A, 21B, 21N, 31A, 31B and 31N, for packing groups II or III substances, a 200 kPa (2 bar) gauge pressure;

(c) In addition, for IBCs of types 31A, 31B and 31N, a 65kPa (0.65 bar) gauge pressure. This test shall be performed before the 200 kPa (2 bar) test.

6.5.4.8.4.2 Rigid plastics and composite IBCs:

(a) For IBCs of types 21H1, 2lH2, 21HZ1 and 21HZ2: 75 kPa (0.75 bar) (gauge);

(b) For IBCs of types 31H1, 31H2, 31HZ1 and 31HZ2: whichever is the greater of two values, the first as determined by one of the following methods:

(i) the total gauge pressure measured in the IBC (i.e. the vapour pressure of the filling substance and the partial pressure of the air or other inert gases, minus 100 kPa) at 55 °C multiplied by a safety factor of 1.5; this total gauge pressure shall be determined on the basis of a maximum degree of filling in accordance with 4.1.1.4 and a filling temperature of 15 °C;

(ii) 1.75 times the vapour pressure at 50 °C of the substance to be carried minus 100 kPa, but with a minimum test pressure of 100 kPa;

(iii) 1.5 times the vapour pressure at 55 °C of the substance to be carried minus 100 kPa, but with a minimum test pressure of 100 kPa;

and the second as determined by the following method:

(iv) twice the static pressure of the substance to be carried, with a minimum of twice the static pressure of water;

6.5.4.8.5 *Criteria for passing the test(s):*

(a) For IBCs of types 21A, 21B, 21N, 31A, 31B and 31N, when subjected to the test pressure specified in 6.5.4.8.4.1 (a) or (b): no leakage;

(b) For IBCs of types 31A, 31B and 31N, when subjected to the test pressure specified in 6.5.4.8.4.1 (c): no permanent deformation which renders the IBC unsafe for carriage and no leakage;

(c) For rigid plastics and composite IBCs: no permanent deformation which would render the IBC unsafe for carriage and no leakage.

6.5.4.9 ***Drop test***

6.5.4.9.1 *Applicability*

For all types of IBCs, as a design type test.

6.5.4.9.2 *Preparation of the IBC for test*

(a) Metal IBCs: the IBC shall be filled to not less than 95% of its capacity for solids or 98% for liquids in accordance with the design type. Pressure-relief devices shall be removed and their apertures plugged, or shall be rendered inoperative;

(b) Flexible IBCs: the IBC shall be filled to not less than 95% of its capacity and to its maximum permissible gross mass, the contents being evenly distributed;

(c) Rigid plastics and composite IBCs: the IBC shall be filled to not less than 95% of its capacity for solids or 98% for liquids in accordance with the design type. Arrangements provided for pressure relief may be removed and plugged or rendered inoperative. Testing of IBCs shall be carried out when the temperature of the test sample and its contents has been reduced to minus 18 °C or lower. Where test samples of composite IBCs are prepared in this way the conditioning specified in 6.5.4.3.1 may be waived. Test liquids shall be kept in the liquid state, if necessary by the addition of anti-freeze. This conditioning may be disregarded if the materials in question are of sufficient ductility and tensile strength at low temperatures;

(d) Fibreboard and wooden IBCs: The IBC shall be filled to not less than 95% of its capacity in accordance with the design type.

6.5.4.9.3 *Method of testing*

The IBC shall be dropped on its base onto a rigid, non-resilient, smooth, flat and horizontal surface in such a manner as to ensure that the point of impact is that part of the base of the IBC considered to be the most vulnerable. IBCs of 0.45 m^3 or less capacity shall also be dropped:

(a) Metal IBCs: on the most vulnerable part other than the part of the base tested in the first drop;

(b) Flexible IBCs: on the most vulnerable side;

(c) Rigid plastics, composite, fibreboard and wooden IBCs: flat on a side, flat on the top and on a corner.

The same or different IBCs may be used for each drop.

6.5.4.9.4 *Drop height*

Packing group I	Packing group II	Packing group III
1.8 m	1.2 m	0.8 m

6.5.4.9.5 *Criteria for passing the test(s):*

(a) Metal IBCs: no loss of contents;

(b) Flexible IBCs: no loss of contents. A slight discharge, e.g. from closures or stitch holes, upon impact shall not be considered to be a failure of the IBC provided that no further leakage occurs after the IBC has been raised clear of the ground;

(c) Rigid plastics, composite, fibreboard and wooden IBCs: no loss of contents. A slight discharge from a closure upon impact shall not be considered to be a failure of the IBC provided that no further leakage occurs.

6.5.4.10 *Tear test*

6.5.4.10.1 *Applicability*

For all types of flexible IBCs, as a design type test.

6.5.4.10.2 *Preparation of the IBC for test*

The IBC shall be filled to not less than 95% of its capacity and to its maximum permissible gross mass, the contents being evenly distributed.

6.5.4.10.3 *Method of testing*

Once the IBC is placed on the ground, a 100 mm knife score, completely penetrating the wall of a wide face, is made at a 45° angle to the principal axis of the IBC, halfway between the bottom surface and the top level of the contents. The IBC shall then be subjected to a uniformly distributed superimposed load equivalent to twice the maximum permissible gross mass. The load shall be applied for at least five minutes. An IBC which is designed to be lifted from the top or the side shall then, after removal of the superimposed load, be lifted clear of the floor and maintained in that position for a period of five minutes.

6.5.4.10.4 *Criteria for passing the test*

The cut shall not propagate more than 25% of its original length.

6.5.4.11 *Topple test*

6.5.4.11.1 *Applicability*

For all types of flexible IBC, as a design type test.

6.5.4.11.2 *Preparation of the IBC for test*

The IBC shall be filled to not less than 95% of its capacity and to its maximum permissible gross mass, the contents being evenly distributed.

6.5.4.11.3 *Method of testing*

The IBC shall be caused to topple on to any part of its top on to a rigid, non-resilient, smooth, flat and horizontal surface.

6.5.4.11.4 *Topple height*

Packing group I	Packing group II	Packing group III
1.8 m	1.2 m	0.8 m

6.5.4.11.5 *Criteria for passing the test*

No loss of contents. A slight discharge, e.g. from closures or stitch holes, upon impact shall not be considered to be a failure of the IBC provided that no further leakage occurs.

6.5.4.12 *Righting test*

6.5.4.12.1 *Applicability*

For all flexible IBCs designed to be lifted from the top or side, as a design type test.

6.5.4.12.2 *Preparation of the IBC for test*

The IBC shall be filled to not less than 95% of its capacity and to its maximum permissible gross mass, the contents being evenly distributed.

6.5.4.12.3 *Method of testing*

The IBC, lying on its side, shall be lifted at a speed of at least 0.1 m/s to upright position, clear of the floor, by one lifting device or by two lifting devices when four are provided.

6.5.4.12.4 *Criteria for passing the test*

No damage to the IBC or its lifting devices which renders the IBC unsafe for carriage or handling.

6.5.4.13 *Test report*

6.5.4.13.1 A test report containing at least the following particulars shall be drawn up and shall be made available to the users of the IBC:

1. Name and address of the test facility;
2. Name and address of applicant (where appropriate);
3. A unique test report identification;
4. Date of the test report;
5. Manufacturer of the IBC;
6. Description of the IBC design type (e.g. dimensions, materials, closures, thickness, etc.) including method of manufacture (e.g. blow moulding) and which may include drawing(s) and/or photograph(s);
7. Maximum capacity;
8. Characteristics of test contents, e.g. viscosity and relative density for liquids and particle size for solids;
9. Test descriptions and results;
10. The test report shall be signed with the name and status of the signatory.

6.5.4.13.2 The test report shall contain statements that the IBC prepared as for carriage was tested in accordance with the appropriate requirements of this Chapter and that the use of other packaging methods or components may render it invalid. A copy of the test report shall be available to the competent authority.

6.5.4.14 ***Testing of individual metal, rigid plastics and composite IBCs***

6.5.4.14.1 These tests shall be carried out as required by the competent authority.

6.5.4.14.2 Each IBC shall correspond in all respects to its design type.

6.5.4.14.3 Each metal, rigid plastics and composite IBC for liquids, or for solids which are filled or discharged under pressure, shall be subjected to the leakproofness test, as an initial test (i.e. before the IBC is first used for carriage), after repair, and at intervals of not more than two and a half years.

6.5.4.14.4 The results of tests and the identity of the party performing the tests shall be recorded in test reports to be kept by the owner of the IBC at least until the date of the next test.

CHAPTER 6.6

REQUIREMENTS FOR THE CONSTRUCTION AND TESTING OF LARGE PACKAGINGS

6.6.1 General

6.6.1.1 The requirements of this Chapter do not apply to:

- packagings for Class 2, except large packagings for articles, including aerosols;
- packagings for Class 6.2, except large packagings for clinical waste of UN No. 3291;
- Class 7 packages containing radioactive material.

6.6.1.2 Large packagings shall be manufactured and tested under a quality assurance programme which satisfies the competent authority in order to ensure that each manufactured packaging meets the requirements of this Chapter.

6.6.1.3 The specific requirements for large packagings in 6.6.4 are based on large packagings currently used. In order to take into account progress in science and technology, there is no objection to the use of large packagings having specifications different from those in 6.6.4 provided they are equally effective, acceptable to the competent authority and able successfully to withstand the tests described in 6.6.5. Methods of testing other than those described in ADR are acceptable provided they are equivalent and are recognized by the competent authority.

6.6.1.4 Manufacturers and subsequent distributors of packagings shall provide information regarding procedures to be followed and a description of the types and dimensions of closures (including required gaskets) and any other components needed to ensure that packages as presented for carriage are capable of passing the applicable performance tests of this Chapter.

6.6.2 Code for designating types of large packagings

6.6.2.1 The code used for large packagings consist of:

(a) Two Arabic numerals:

50 for rigid large packagings; or
51 for flexible large packagings; and

(b) A capital letter in Latin character indicating the nature of the material, e.g. wood, steel etc. The capital letters used shall be those shown in 6.1.2.6.

6.6.2.2 The letter "W" may follow the Large Packaging code. The letter "W" signifies that the large packaging, although of the same type indicated by the code, is manufactured to a specification different from those in 6.6.4 and is considered equivalent in accordance with the requirements in 6.6.1.3.

6.6.3 Marking

6.6.3.1 ***Primary marking***

Each large packaging manufactured and intended for use in accordance with the provisions of ADR shall bear durable and legible markings showing:

(a) The United Nations packaging symbol

For metal large packagings on which the marking is stamped or embossed, the capital letters "UN" may be applied instead of the symbol;

(b) The number "50" designating a large rigid packaging or "51" for flexible large packagings, followed by the material type in accordance with 6.5.1.4.1 (b);

(c) A capital letter designating the packing group(s) for which the design type has been approved:

X for packing groups I, II and III
Y for packing groups II and III
Z for packing group III only;

(d) The month and year (last two digits) of manufacture;

(e) The State authorizing the allocation of the mark; indicated by the distinguishing sign for motor vehicles in international traffic [1];

(f) The name or symbol of the manufacturer and other identification of the large packagings as specified by the competent authority;

(g) The stacking test load in kg. For large packagings not designed for stacking the figure "0" shall be shown;

(h) The maximum permissible gross mass in kilograms.

The primary marking required above shall be applied in the sequence of the sub-paragraphs.

Each element of the marking applied in accordance with (a) to (h) shall be clearly separated, e.g. by a slash or space, so as to be easily identifiable.

6.6.3.2 ***Examples of the marking*:**

50A/X/05 01/N/PQRS 2500/1000	For a large steel packaging suitable for stacking; stacking load: 2 500 kg; maximum gross mass: 1 000 kg.
50H/Y/04 02/D/ABCD 987 0/800	For a large plastics packaging not suitable for stacking; maximum gross mass: 800 kg.
51H/Z/06 01/S/1999 0/500	For a large flexible packaging not suitable for stacking; maximum gross mass: 500 kg.

[1] *Distinguishing sign for motor vehicles in international traffic prescribed in the Vienna Convention on Road Traffic (1968).*

6.6.4 Specific requirements for large packagings

6.6.4.1 ***Specific requirements for metal large packagings***

50A steel
50B aluminium
50N metal (other than steel or aluminium)

6.6.4.1.1 The large packaging shall be made of suitable ductile metal in which the weldability has been fully demonstrated. Welds shall be skilfully made and afford complete safety. Low-temperature performance shall be taken into account when appropriate.

6.6.4.1.2 Care shall be taken to avoid damage by galvanic action due to the juxtaposition of dissimilar metals.

6.6.4.2 ***Specific requirements for flexible material large packagings***

51H flexible plastics
51M flexible paper

6.6.4.2.1 The large packaging shall be manufactured from suitable materials. The strength of the material and the construction of the flexible large packagings shall be appropriate to its capacity and its intended use.

6.6.4.2.2 All materials used in the construction of flexible large packagings of types 51M shall, after complete immersion in water for not less than 24 hours, retain at least 85% of the tensile strength as measured originally on the material conditioned to equilibrium at 67% relative humidity or less.

6.6.4.2.3 Seams shall be formed by stitching, heat sealing, glueing or any equivalent method. All stitched seam-ends shall be secured.

6.6.4.2.4 Flexible large packagings shall provide adequate resistance to ageing and to degradation caused by ultraviolet radiation or the climatic conditions, or by the substance contained, thereby rendering them appropriate to their intended use.

6.6.4.2.5 For plastics flexible large packagings where protection against ultraviolet radiation is required, it shall be provided by the addition of carbon black or other suitable pigments or inhibitors. These additives shall be compatible with the contents and remain effective throughout the life of the large packaging. Where use is made of carbon black, pigments or inhibitors other than those used in the manufacture of the tested design type, re-testing may be waived if changes in the carbon black content, the pigment content or the inhibitor content do not adversely affect the physical properties of the material of construction.

6.6.4.2.6 Additives may be incorporated into the material of the large packaging to improve the resistance to ageing or to serve other purposes, provided that these do not adversely affect the physical or chemical properties of the material.

6.6.4.2.7 When filled, the ratio of height to width shall be not more than 2:1.

6.6.4.3 ***Specific requirements for plastics large packagings***

50H rigid plastics

6.6.4.3.1 The large packaging shall be manufactured from suitable plastics material of known specifications and be of adequate strength in relation to its capacity and its intended use. The material shall be adequately resistant to ageing and to degradation caused by the substance contained or, where relevant, by ultraviolet radiation. Low temperature performance shall be taken into account when appropriate. Any permeation of the substance contained shall not constitute a danger under normal conditions of carriage.

6.6.4.3.2 Where protection against ultraviolet radiation is required, it shall be provided by the addition of carbon black or other suitable pigments or inhibitors. These additives shall be compatible with the contents and remain effective throughout the life of the outer packaging. Where use is made of carbon black, pigments or inhibitors other than those used in the manufacture of the tested design type, re-testing may be waived if changes in the carbon black content, the pigment content or the inhibitor content do not adversely affect the physical properties of the material of construction.

6.6.4.3.3 Additives may be incorporated in the material of the large packaging to improve the resistance to ageing or to serve other purposes, provided that these do not adversely affect the physical or chemical properties of the material.

6.6.4.4 ***Specific requirements for fibreboard large packagings***

50G rigid fibreboard

6.6.4 4.1 Strong and good quality solid or double-faced corrugated fibreboard (single or multiwall) shall be used, appropriate to the capacity of the large packagings and to their intended use. The water resistance of the outer surface shall be such that the increase in mass, as determined in a test carried out over a period of 30 minutes by the Cobb method of determining water absorption, is not greater than 155 g/m^2 - see ISO 535:1991. It shall have proper bending qualities. Fibreboard shall be cut, creased without scoring, and slotted so as to permit assembly without cracking, surface breaks or undue bending. The fluting or corrugated fibreboard shall be firmly glued to the facings.

6.6.4.4.2 The walls, including top and bottom, shall have a minimum puncture resistance of 15 J measured according to ISO 3036:1975.

6.6.4.4.3 Manufacturing joins in the outer packaging of large packagings shall be made with an appropriate overlap and shall be taped, glued, stitched with metal staples or fastened by other means at least equally effective. Where joins are effected by gluing or taping, a water resistant adhesive shall be used. Metal staples shall pass completely through all pieces to be fastened and be formed or protected so that any inner liner cannot be abraded or punctured by them.

6.6.4.4.4 Any integral pallet base forming part of a large packaging or any detachable pallet shall be suitable for mechanical handling with the large packaging filled to its maximum permissible gross mass.

6.6.4.4.5 The pallet or integral base shall be designed so as to avoid any protrusion of the base of the large packaging that might be liable to damage in handling.

6.6.4.4.6 The body shall be secured to any detachable pallet to ensure stability in handling and carriage. Where a detachable pallet is used, its top surface shall be free from sharp protrusions that might damage the large packaging.

6.6.4.4.7 Strengthening devices such as timber supports to increase stacking performance may be used but shall be external to the liner.

6.6.4.4.8 Where large packagings are intended for stacking, the bearing surface shall be such as to distribute the load in a safe manner.

6.6.4.5 ***Specific requirements for wooden large packagings***

50C natural wood
50D plywood
50F reconstituted wood

6.6.4.5.1 The strength of the materials used and the method of construction shall be appropriate to the capacity and intended use of the large packagings.

6.6.4.5.2 Natural wood shall be well seasoned, commercially dry and free from defects that would materially lessen the strength of any part of the large packagings. Each part of the large packagings shall consist of one piece or be equivalent thereto. Parts are considered equivalent to one piece when a suitable method of glued assembly is used as for instance Lindermann joint, tongue and groove joint, ship lap or rabbet joint; or butt joint with at least two corrugated metal fasteners at each joint, or when other methods at least equally effective are used.

6.6.4.5.3 Large packagings of plywood shall be at least 3-ply. They shall be made of well seasoned rotary cut, sliced or sawn veneer, commercially dry and free from defects that would materially lessen the strength of the large packaging. All adjacent plies shall be glued with water resistant adhesive. Other suitable materials may be used with plywood for the construction of the large packaging.

6.6.4.5.4 Large packagings of reconstituted wood shall be made of water resistant reconstituted wood such as hardboard, particle board or other suitable type.

6.6.4.5.5 Large packagings shall be firmly nailed or secured to corner posts or ends or be assembled by equally suitable devices.

6.6.4.5.6 Any integral pallet base forming part of a large packaging or any detachable pallet shall be suitable for mechanical handling with the large packaging filled to its maximum permissible gross mass.

6.6.4.5.7 The pallet or integral base shall be designed so as to avoid any protrusion of the base of the large packaging that might be liable to damage in handling.

6.6.4.5.8 The body shall be secured to any detachable pallet to ensure stability in handling and carriage. Where a detachable pallet is used, its top surface shall be free from sharp protrusions that might damage the large packaging.

6.6.4.5.9 Strengthening devices such as timber supports to increase stacking performance may be used but shall be external to the liner.

6.6.4.5.10 Where large packagings are intended for stacking, the bearing surface shall be such as to distribute the load in a safe manner.

6.6.5 Test requirements for large packagings

6.6.5.1 ***Performance and frequency of test***

6.6.5.1.1 The design type of each large packaging shall be tested as provided in 6.6.5.3 in accordance with procedures established and approved by the competent authority.

6.6.5.1.2 Tests shall be successfully performed on each large packaging design type before such a packaging is used. A large packaging design type is defined by the design, size, material and thickness, manner of construction and packing, but may include various surface treatments. It also includes large packagings which differ from the design type only in their lesser design height.

6.6.5.1.3 Tests shall be repeated on production samples at intervals established by the competent authority. For such tests on fibreboard large packagings, preparation at ambient conditions is considered equivalent to the provisions of 6.6.5.2.3.

6.6.5.1.4 Tests shall also be repeated after each modification which alters the design, material or manner of construction of large packagings.

6.6.5.1.5 The competent authority may permit the selective testing of large packagings that differ only in minor respects from a tested type, e.g. smaller sizes of inner packagings or inner packagings of lower net mass; and large packagings which are produced with small reductions in external dimension(s).

6.6.5.1.6 Where a large packaging has been successfully tested with different types of inner packagings, a variety of such different inner packagings may also be assembled in this large packaging. In addition, provided an equivalent level of performance is maintained, the following variations in inner packagings are allowed without further testing of the package:

(a) Inner packagings of equivalent or smaller size may be used provided:

(i) The inner packagings are of similar design to the tested inner packagings (e.g. shape - round, rectangular, etc);

(ii) The material of construction of the inner packagings (glass, plastics, metal, etc.) offers resistance to impact and stacking forces equal to or greater than that of the originally tested inner packaging;

(iii) The inner packagings have the same or smaller openings and the closure is of similar design (e.g. screw cap, friction lid, etc);

(iv) Sufficient additional cushioning material is used to take up void spaces and to prevent significant movement of the inner packagings; and

(v) Inner packagings are oriented within the large packagings in the same manner as in the tested package;

(b) A lesser number of the tested inner packagings, or of the alternative types of inner packagings identified in (a) above, may be used provided sufficient cushioning is added to fill the void space(s) and to prevent significant movement of the inner packagings.

6.6.5.1.7 The competent authority may at any time require proof, by tests in accordance with this section, that serially-produced large packagings meet the requirements of the design type tests.

6.6.5.1.8 Provided the validity of the test results is not affected and with the approval of the competent authority, several tests may be made on one sample.

6.6.5.2 ***Preparation for testing***

6.6.5.2.1 Tests shall be carried out on large packagings prepared as for carriage including the inner packagings or articles used. Inner packagings shall be filled to not less than 98% of their maximum capacity for liquids or 95% for solids. For large packagings where the inner packagings are designed to carry liquids and solids, separate testing is required for both liquid and solid contents. The substances in the inner packagings or the articles to be carried in the large packagings may be replaced by other material or articles except where this would invalidate the results of the tests. When other inner packagings or articles are used they shall have the same physical characteristics (mass, etc) as the inner packagings or articles to be carried. It is permissible to use additives, such as bags of lead shot, to achieve the requisite total package mass, so long as they are placed so that the test results are not affected.

6.6.5.2.2 Large packagings made of plastics materials and large packagings containing inner packagings of plastic materials - other than bags intended to contain solids or articles - shall be drop tested when the temperature of the test sample and its contents has been reduced to -18 °C or lower. This conditioning may be disregarded if the materials in question are of sufficient ductility and tensile strength at low temperatures. Where test sample are prepared in this way, the conditioning in 6.6.5.2.3 may be waived. Test liquids shall be kept in the liquid state by the addition of anti-freeze if necessary.

6.6.5.2.3 Large packagings of fibreboard shall be conditioned for at least 24 hours in an atmosphere having a controlled temperature and relative humidity (r.h.). There are three options, one of which shall be chosen.

The preferred atmosphere is 23 °C ± 2 °C and 50% ± 2% r.h. The two other options are: 20 °C ± 2 °C and 65% ± 2% r.h.; or 27 °C ± 2 °C and 65% ± 2% r.h.

NOTE: *Average values shall fall within these limits. Short term fluctuations and measurement limitations may cause individual measurements to vary by up to ± 5% relative humidity without significant impairment of test reproducibility.*

6.6.5.3 ***Test requirements***

6.6.5.3.1 *Bottom lift test*

6.6.5.3.1.1 Applicability

For all types of large packagings which are fitted with means of lifting from the base, as a design type test.

6.6.5.3.1.2 Preparation of large packaging for test

The large packaging shall be loaded to 1.25 times its maximum permissible gross mass, the load being evenly distributed.

6.6.5.3.1.3 Method of testing

The large packaging shall be raised and lowered twice by a lift truck with the forks centrally positioned and spaced at three quarters of the dimension of the side of entry (unless the points of entry are fixed). The forks shall penetrate to three quarters of the direction of entry. The test shall be repeated from each possible direction of entry.

6.6.5.3.1.4 Criteria for passing the test

No permanent deformation which renders the large packaging unsafe for carriage and no loss of contents.

6.6.5.3.2 *Top lift test*

6.6.5.3.2.1 Applicability

For types of large packagings which are intended to be lifted from the top and fitted with means of lifting, as a design type test.

6.6.5.3.2.2 Preparation of large packaging for test

The large packaging shall be loaded to twice its maximum permissible gross mass. A flexible large packaging shall be loaded to six times its maximum permissible gross mass, the load being evenly distributed.

6.6.5.3.2.3 Method of testing

The large packaging shall be lifted in the manner for which it is designed until clear of the floor and maintained in that position for a period of five minutes.

6.6.5.3.2.4 Criteria for passing the test

No permanent deformation which renders the large packaging unsafe for carriage and no loss of contents.

6.6.5.3.3 *Stacking test*

6.6.5.3.3.1 Applicability

For all types of large packagings which are designed to be stacked on each other, as a design type test.

6.6.5.3.3.2 Preparation of large packaging for test

The large packaging shall be filled to its maximum permissible gross mass.

6.6.5.3.3.3 Method of testing

The large packaging shall be placed on its base on level hard ground and subjected to a uniformly distributed superimposed test load (see 6.6.5.3.3.4) for a period of at least five minutes, large packagings of wood, fibreboard and plastics materials for a period of 24 h.

6.6.5.3.3.4 Calculation of superimposed test load

The load to be placed on the large packagings shall be 1.8 times the combined maximum permissible gross mass of the number of similar large packagings that may be stacked on top of the large packagings during carriage.

6.6.5.3.3.5 Criteria for passing the test

No permanent deformation which renders the large packaging unsafe for carriage and no loss of contents.

6.6.5.3.4 *Drop test*

6.6.5.3.4.1 Applicability

For all types of large packagings as a design type test.

6.6.5.3.4.2 Preparation of large packaging for testing

The large packaging shall be filled in accordance with 6.6.5.2.1

6.6.5.3.4.3 Method of testing

The large packaging shall be dropped onto a rigid, non-resilient, smooth, flat and horizontal surface, in such a manner as to ensure that the point of impact is that part of the base of the large packaging considered to be the most vulnerable.

6.6.5.3.4.4 Drop height

Packing group I	Packing group II	Packing group III
1.8 m	1.2 m	0.8 m

***NOTE**: Large packagings for substances and articles of Class 1, self-reactive substances of Class 4.1 and organic peroxides of Class 5.2 shall be tested at the packing group II performance level.*

6.6.5.3.4.5 Criteria for passing the test

6.6.5.3.4.5.1 The large packaging shall not exhibit any damage liable to affect safety during carriage. There shall be no leakage of the filling substance from inner packaging(s) or article(s).

6.6.5.3.4.5.2 No rupture is permitted in large packagings for articles of Class 1 which would permit the spillage of loose explosive substances or articles from the large packaging.

6.6.5.3.4.5.3 Where a large packaging undergoes a drop test, the sample passes the test if the entire contents are retained even if the closure is no longer sift-proof.

6.6.5.4 ***Certification and test report***

6.6.5.4.1 In respect of each design type of large packaging a certificate and mark (as in 6.6.3) shall be issued attesting that the design type including its equipment meets the test requirements.

6.6.5.4.2 A test report containing at least the following particulars shall be drawn up and shall be made available to the users of the large packaging:

1. Name and address of the test facility;
2. Name and address of applicant (where appropriate);
3. A unique test report identification;
4. Date of the test report;
5. Manufacturer of the large packaging;
6. Description of the large packaging design type (e.g. dimensions, materials, closures, thickness, etc) and/or photograph(s);
7. Maximum capacity/maximum permissible gross mass;

8. Characteristics of test contents, e.g. types and descriptions of inner packagings or articles used;

9. Test descriptions and results;

10. The test report shall be signed with the name and status of the signatory.

6.6.5.4.3 The test report shall contain statements that the large packaging prepared as for carriage was tested in accordance with the appropriate provisions of this Chapter and that the use of other packaging methods or components may render it invalid. A copy of the test report shall be available to the competent authority.

CHAPTER 6.7

REQUIREMENTS FOR THE DESIGN, CONSTRUCTION, INSPECTION AND TESTING OF PORTABLE TANKS AND UN MULTIPLE-ELEMENT GAS CONTAINERS (MEGCs)

NOTE: *For fixed tanks (tank-vehicles), demountable tanks and tank-containers and tank swap bodies, with shells made of metallic materials, and battery-vehicles and multiple element gas containers (MEGCs) other than UN MEGCs, see Chapter 6.8; for fibre-reinforced plastics tanks, see Chapter 6.9; for vacuum operated waste tanks, see Chapter 6.10.*

6.7.1 Application and general requirements

6.7.1.1 The requirements of this Chapter apply to portable tanks intended for the carriage of dangerous goods of Classes 2, 3, 4.1, 4.2, 4.3, 5.1, 5.2, 6.1, 6.2, 7, 8 and 9, and to MEGCs intended for the carriage of non-refrigerated gases of Class 2, by all modes of carriage. In addition to the requirements of this Chapter, unless otherwise specified, the applicable requirements of the International Convention for Safe Containers (CSC) 1972, as amended, shall be fulfilled by any multimodal portable tank or MEGC which meets the definition of a "container" within the terms of that Convention. Additional requirements may apply to offshore portable tanks or MEGCs that are handled in open seas.

6.7.1.2 In recognition of scientific and technological advances, the technical requirements of this Chapter may be varied by alternative arrangements. These alternative arrangements shall offer a level of safety not less than that given by the requirements of this Chapter with respect to the compatibility with substances carried and the ability of the portable tank or MEGC to withstand impact, loading and fire conditions. For international carriage, alternative arrangement portable tanks or MEGCs shall be approved by the applicable competent authorities.

6.7.1.3 When a substance is not assigned a portable tank instruction (T1 to T23, T50 or T75) in Column (10) of Table A of in Chapter 3.2, interim approval for carriage may be issued by the competent authority of the country of origin. The approval shall be included in the documentation of the consignment and contain as a minimum the information normally provided in the portable tank instructions and the conditions under which the substance shall be carried.

6.7.2 Requirements for the design, construction, inspection and testing of portable tanks intended for the carriage of substances of Class 1 and Classes 3 to 9

6.7.2.1 *Definitions*

For the purposes of this section:

Alternative arrangement means an approval granted by the competent authority for a portable tank or MEGC that has been designed, constructed or tested to technical requirements or testing methods other than those specified in this Chapter:

Portable tank means a multimodal tank used for the carriage of substances of Class 1 and Classes 3 to 9. The portable tank includes a shell fitted with service equipment and structural equipment necessary for the carriage of dangerous substances. The portable tank shall be capable of being filled and discharged without the removal of its structural equipment. It shall possess stabilizing members external to the shell, and shall be capable of being lifted

when full. It shall be designed primarily to be loaded onto a transport vehicle or ship and shall be equipped with skids, mountings or accessories to facilitate mechanical handling. Tank-vehicles, tank-wagons, non-metallic tanks and intermediate bulk containers (IBCs) are not considered to fall within the definition for portable tanks;

Shell means the part of the portable tank which retains the substance intended for carriage (tank proper), including openings and their closures, but does not include service equipment or external structural equipment;

Service equipment means measuring instruments and filling, discharge, venting, safety, heating, cooling and insulating devices;

Structural equipment means the reinforcing, fastening, protective and stabilizing members external to the shell;

Maximum allowable working pressure (MAWP) means a pressure that shall be not less than the highest of the following pressures measured at the top of the shell while in operating position:

(a) The maximum effective gauge pressure allowed in the shell during filling or discharge; or

(b) The maximum effective gauge pressure to which the shell is designed which shall be not less than the sum of:

(i) the absolute vapour pressure (in bar) of the substance at 65 °C, minus 1 bar; and

(ii) the partial pressure (in bar) of air or other gases in the ullage space being determined by a maximum ullage temperature of 65 °C and a liquid expansion due to an increase in mean bulk temperature of t_r - t_f (t_f = filling temperature, usually 15 °C; t_r = maximum mean bulk temperature, 50 °C);

Design pressure means the pressure to be used in calculations required by a recognized pressure vessel code. The design pressure shall be not less than the highest of the following pressures:

(a) The maximum effective gauge pressure allowed in the shell during filling or discharge; or

(b) The sum of:

(i) the absolute vapour pressure (in bar) of the substance at 65 °C, minus 1 bar;

(ii) the partial pressure (in bar) of air or other gases in the ullage space being determined by a maximum ullage temperature of 65 °C and a liquid expansion due to an increase in mean bulk temperature of t_r - t_f (t_f = filling temperature usually 15 °C; t_r = maximum mean bulk temperature, 50 °C); and

(iii) a head pressure determined on the basis of the static forces specified in 6.7.2.2.12, but not less than 0.35 bar; or

(c) Two thirds of the minimum test pressure specified in the applicable portable tank instruction in 4.2.5.2.6;

Test pressure means the maximum gauge pressure at the top of the shell during the hydraulic pressure test equal to not less than 1.5 times the design pressure. The minimum test pressure for portable tanks intended for specific substances is specified in the applicable portable tank instruction in 4.2.5.2.6;

Leakproofness test means a test using gas subjecting the shell and its service equipment to an effective internal pressure of not less than 25% of the MAWP;

Maximum permissible gross mass (MPGM) means the sum of the tare mass of the portable tank and the heaviest load authorized for carriage;

Reference steel means a steel with a tensile strength of 370 N/mm^2 and an elongation at fracture of 27%;

Mild steel means a steel with a guaranteed minimum tensile strength of 360 N/mm^2 to 440 N/mm^2 and a guaranteed minimum elongation at fracture conforming to 6.7.2.3.3.3;

Design temperature range for the shell shall be -40 °C to 50 °C for substances carried under ambient conditions. For the other substances handled under elevated temperature conditions the design temperature shall be not less than the maximum temperature of the substance during filling, discharge or carriage. More severe design temperatures shall be considered for portable tanks subjected to severe climatic conditions;

Fine grain steel means steel which has a ferritic grain size of 6 or finer when determined in accordance with ASTM E 112-96 or as defined in EN 10028-3, Part 3;

Fusible element means a non-reclosable pressure relief device that is thermally actuated;

Offshore portable tank means a portable tank specially designed for repeated use for carriage to, from and between offshore facilities. An offshore portable tank is designed and constructed in accordance with the guidelines for the approval of containers handled in open seas specified by the International Maritime Organization in document MSC/Circ.860.

6.7.2.2 *General design and construction requirements*

6.7.2.2.1 Shells shall be designed and constructed in accordance with the requirements of a pressure vessel code recognized by the competent authority. Shells shall be made of metallic materials suitable for forming. The materials shall in principle conform to national or international material standards. For welded shells only a material whose weldability has been fully demonstrated shall be used. Welds shall be skilfully made and afford complete safety. When the manufacturing process or the materials make it necessary, the shells shall be suitably heat-treated to guarantee adequate toughness in the weld and in the heat affected zones. In choosing the material, the design temperature range shall be taken into account with respect to risk of brittle fracture, to stress corrosion cracking and to resistance to impact. When fine grain steel is used, the guaranteed value of the yield strength shall be not more than 460 N/mm^2 and the guaranteed value of the upper limit of the tensile strength shall be not more than 725 N/mm^2 according to the material specification. Aluminium may only be used as a construction material when indicated in a portable tank special provision assigned to a specific substance in Column (11) of Table A of Chapter 3.2 or when approved by the competent authority. When aluminium is authorized, it shall be insulated to prevent significant loss of physical properties when subjected to a heat load of 110 kW/m^2 for a period of not less than 30 minutes. The insulation shall remain effective at all temperatures less than 649 °C and shall be jacketed with a material with a melting point of not less than 700 °C. Portable tank materials shall be suitable for the external environment in which they may be carried.

6.7.2.2.2 Portable tank shells, fittings, and pipework shall be constructed from materials which are:

(a) Substantially immune to attack by the substance(s) intended to be carried; or

(b) Properly passivated or neutralized by chemical reaction; or

(c) Lined with corrosion-resistant material directly bonded to the shell or attached by equivalent means.

6.7.2.2.3 Gaskets shall be made of materials not subject to attack by the substance(s) intended to be carried.

6.7.2.2.4 When shells are lined, the lining shall be substantially immune to attack by the substance(s) intended to be carried, homogeneous, non porous, free from perforations, sufficiently elastic and compatible with the thermal expansion characteristics of the shell. The lining of every shell, shell fittings and piping shall be continuous, and shall extend around the face of any flange. Where external fittings are welded to the tank, the lining shall be continuous through the fitting and around the face of external flanges.

6.7.2.2.5 Joints and seams in the lining shall be made by fusing the material together or by other equally effective means.

6.7.2.2.6 Contact between dissimilar metals which could result in damage by galvanic action shall be avoided.

6.7.2.2.7 The materials of the portable tank, including any devices, gaskets, linings and accessories, shall not adversely affect the substance(s) intended to be carried in the portable tank.

6.7.2.2.8 Portable tanks shall be designed and constructed with supports to provide a secure base during carriage and with suitable lifting and tie-down attachments.

6.7.2.2.9 Portable tanks shall be designed to withstand, without loss of contents, at least the internal pressure due to the contents, and the static, dynamic and thermal loads during normal conditions of handling and carriage. The design shall demonstrate that the effects of fatigue, caused by repeated application of these loads through the expected life of the portable tank, have been taken into account.

6.7.2.2.10 A shell which is to be equipped with a vacuum-relief device shall be designed to withstand, without permanent deformation, an external pressure of not less than 0.21 bar above the internal pressure. The vacuum-relief device shall be set to relieve at a vacuum setting not greater than minus (-) 0.21 bar unless the shell is designed for a higher external over pressure, in which case the vacuum-relief pressure of the device to be fitted shall be not greater than the tank design vacuum pressure. A shell used for the carriage of solid substances (powdery or granular) of packing groups II or III only, which do not liquefy during carriage, may be designed for a lower external pressure, subject to the approval of the competent authority. In this case, the vacuum valve shall be set to relieve at this lower pressure. A shell that is not to be fitted with a vacuum-relief device shall be designed to withstand, without permanent deformation an external pressure of not less than 0.4 bar above the internal pressure.

6.7.2.2.11 Vacuum-relief devices used on portable tanks intended for the carriage of substances meeting the flash-point criteria of Class 3, including elevated temperature substances carried at or above their flash-point, shall prevent the immediate passage of flame into the shell, or the portable tank shall have a shell capable of withstanding, without leakage an internal explosion resulting from the passage of flame into the shell.

6.7.2.2.12 Portable tanks and their fastenings shall, under the maximum permissible load, be capable of absorbing the following separately applied static forces:

(a) In the direction of travel: twice the MPGM multiplied by the acceleration due to gravity (g) [1];

(b) Horizontally at right angles to the direction of travel: the MPGM (when the direction of travel is not clearly determined, the forces shall be equal to twice the MPGM) multiplied by the acceleration due to gravity (g) [1];

(c) Vertically upwards: the MPGM multiplied by the acceleration due to gravity (g) [1]; and

(d) Vertically downwards: twice the MPGM (total loading including the effect of gravity) multiplied by the acceleration due to gravity (g) [1].

6.7.2.2.13 Under each of the forces in 6.7.2.2.12, the safety factor to be observed shall be as follows:

(a) For metals having a clearly defined yield point, a safety factor of 1.5 in relation to the guaranteed yield strength; or

(b) For metals with no clearly defined yield point, a safety factor of 1.5 in relation to the guaranteed 0.2% proof strength and, for austenitic steels, the 1% proof strength.

6.7.2.2.14 The values of yield strength or proof strength shall be the values according to national or international material standards. When austenitic steels are used, the specified minimum values of yield strength or proof strength according to the material standards may be increased by up to 15% when these greater values are attested in the material inspection certificate. When no material standard exists for the metal in question, the value of yield strength or proof strength used shall be approved by the competent authority.

6.7.2.2.15 Portable tanks shall be capable of being electrically earthed when intended for the carriage of substances meeting the flash-point criteria of Class 3 including elevated temperature substances carried at or above their flash-point. Measures shall be taken to prevent dangerous electrostatic discharge.

6.7.2.2.16 When required for certain substances by the applicable portable tank instruction indicated in Column (10) of Table A of Chapter 3.2 and described in 4.2.5.2.6 or by a portable tank special provision indicated in Column (11) of Table A of Chapter 3.2 and described in 4.2.5.3, portable tanks shall be provided with additional protection, which may take the form of additional shell thickness or a higher test pressure, the additional shell thickness or higher test pressure being determined in the light of the inherent risks associated with the carriage of the substances concerned.

6.7.2.3 ***Design criteria***

6.7.2.3.1 Shells shall be of a design capable of being stress-analysed mathematically or experimentally by resistance strain gauges, or by other methods approved by the competent authority.

6.7.2.3.2 Shells shall be designed and constructed to withstand a hydraulic test pressure not less than 1.5 times the design pressure. Specific requirements are laid down for certain substances in the applicable portable tank instruction indicated in Column (10) of Table A of Chapter 3.2 and described in 4.2.5.2.6 or by a portable tank special provision indicated in Column (11) of Table A of Chapter 3.2 and described in 4.2.5.3. Attention is drawn to the minimum shell thickness requirements specified in 6.7.2.4.1 to 6.7.2.4.10.

---

[1] *For calculation purposes g = 9.81 m/s^2.*

6.7.2.3.3 For metals exhibiting a clearly defined yield point or characterized by a guaranteed proof strength (0.2% proof strength, generally, or 1% proof strength for austenitic steels) the primary membrane stress σ (sigma) in the shell shall not exceed 0.75 Re or 0.50 Rm, whichever is lower, at the test pressure, where:

Re = yield strength in N/mm^2, or 0.2% proof strength or, for austenitic steels, 1% proof strength;

Rm = minimum tensile strength in N/mm^2.

6.7.2.3.3.1 The values of Re and Rm to be used shall be the specified minimum values according to national or international material standards. When austenitic steels are used, the specified minimum values for Re and Rm according to the material standards may be increased by up to 15% when greater values are attested in the material inspection certificate. When no material standard exists for the metal in question, the values of Re and Rm used shall be approved by the competent authority or its authorized body.

6.7.2.3.3.2 Steels which have a Re/Rm ratio of more than 0.85 are not allowed for the construction of welded shells. The values of Re and Rm to be used in determining this ratio shall be the values specified in the material inspection certificate.

6.7.2.3.3.3 Steels used in the construction of shells shall have an elongation at fracture, in %, of not less than 10 000/Rm with an absolute minimum of 16% for fine grain steels and 20% for other steels. Aluminium and aluminium alloys used in the construction of shells shall have an elongation at fracture, in %, of not less than 10 000/6Rm with an absolute minimum of 12%.

6.7.2.3.3.4 For the purpose of determining actual values for materials, it shall be noted that for sheet metal, the axis of the tensile test specimen shall be at right angles (transversely) to the direction of rolling. The permanent elongation at fracture shall be measured on test specimens of rectangular cross sections in accordance with ISO 6892:1998 using a 50 mm gauge length.

6.7.2.4 ***Minimum shell thickness***

6.7.2.4.1 The minimum shell thickness shall be the greater thickness based on:

(a) The minimum thickness determined in accordance with the requirements of 6.7.2.4.2 to 6.7.2.4.10;

(b) The minimum thickness determined in accordance with the recognized pressure vessel code including the requirements in 6.7.2.3; and

(c) The minimum thickness specified in the applicable portable tank instruction indicated in Column (10) of Table A of Chapter 3.2 and described in 4.2.5.2.6 or by a portable tank special provision indicated in Column (11) of Table A of Chapter 3.2 and described in 4.2.5.3.

6.7.2.4.2 The cylindrical portions, ends (heads) and manhole covers of shells not more than 1.80 m in diameter shall be not less than 5 mm thick in the reference steel or of equivalent thickness in the metal to be used. Shells more than 1.80 m in diameter shall be not less than 6 mm thick in the reference steel or of equivalent thickness in the metal to be used, except that for powdered or granular solid substances of packing group II or III the minimum thickness requirement may be reduced to not less than 5 mm thick in the reference steel or of equivalent thickness in the metal to be used.

6.7.2.4.3 When additional protection against shell damage is provided, portable tanks with test pressures less than 2.65 bar may have the minimum shell thickness reduced, in proportion to the protection provided, as approved by the competent authority. However, shells not more than 1.80 m in diameter shall be not less than 3 mm thick in the reference steel or of equivalent thickness in the metal to be used. Shells more than 1.80 m in diameter shall be not less than 4 mm thick in the reference steel or of equivalent thickness in the metal to be used.

6.7.2.4.4 The cylindrical portions, ends (heads) and manhole covers of all shells shall be not less than 3 mm thick regardless of the material of construction.

6.7.2.4.5 The additional protection referred to in 6.7.2.4.3 may be provided by overall external structural protection, such as suitable "sandwich" construction with the outer sheathing (jacket) secured to the shell, double wall construction or by enclosing the shell in a complete framework with longitudinal and transverse structural members.

6.7.2.4.6 The equivalent thickness of a metal other than the thickness prescribed for the reference steel in 6.7.2.4.2 shall be determined using the following formula:

$$e_1 = \frac{21.4 e_o}{\sqrt[3]{Rm_1 \times A_1}}$$

where:

e_1 = required equivalent thickness (in mm) of the metal to be used;

e_0 = minimum thickness (in mm) of the reference steel specified in the applicable portable tank instruction indicated in Column (10) of Table A of Chapter 3.2 and described in 4.2.5.2.6 or by a portable tank special provision indicated in Column (11) of Table A of Chapter 3.2 and described in 4.2.5.3;

Rm_1 = guaranteed minimum tensile strength (in N/mm^2) of the metal to be used (see 6.7.2.3.3);

A_1 = guaranteed minimum elongation at fracture (in %) of the metal to be used according to national or international standards.

6.7.2.4.7 When in the applicable portable tank instruction in 4.2.5.2.6, a minimum thickness of 8 mm or 10 mm is specified, it shall be noted that these thicknesses are based on the properties of the reference steel and a shell diameter of 1.80 m. When a metal other than mild steel (see 6.7.2.1) is used or the shell has a diameter of more than 1.80 m, the thickness shall be determined using the following formula:

$$e_1 = \frac{21.4 e_o \, d_1}{1{,}8 \sqrt[3]{Rm_1 \times A_1}}$$

where:

e_1 = required equivalent thickness (in mm) of the metal to be used;

e_0 = minimum thickness (in mm) of the reference steel specified in the applicable portable tank instruction indicated in Column (10) of Table A of Chapter 3.2 and described in 4.2.5.2.6 or by a portable tank special provision indicated in Column (11) of Table A of Chapter 3.2 and described in 4.2.5.3;

d_1 = diameter of the shell (in m), but not less than 1.80 m;

Rm_1 = guaranteed minimum tensile strength (in N/mm^2) of the metal to be used (see 6.7.2.3.3);

A_1 = guaranteed minimum elongation at fracture (in %) of the metal to be used according to national or international standards.

6.7.2.4.8 In no case shall the wall thickness be less than that prescribed in 6.7.2.4.2, 6.7.2.4.3 and 6.7.2.4.4. All parts of the shell shall have a minimum thickness as determined by 6.7.2.4.2 to 6.7.2.4.4. This thickness shall be exclusive of any corrosion allowance.

6.7.2.4.9 When mild steel is used (see 6.7.2.1), calculation using the formula in 6.7.2.4.6 is not required.

6.7.2.4.10 There shall be no sudden change of plate thickness at the attachment of the ends (heads) to the cylindrical portion of the shell.

6.7.2.5 ***Service equipment***

6.7.2.5.1 Service equipment shall be so arranged as to be protected against the risk of being wrenched off or damaged during handling and carriage. When the connection between the frame and the shell allows relative movement between the sub-assemblies, the equipment shall be so fastened as to permit such movement without risk of damage to working parts. The external discharge fittings (pipe sockets, shut-off devices), the internal stop-valve and its seating shall be protected against the danger of being wrenched off by external forces (for example using shear sections). The filling and discharge devices (including flanges or threaded plugs) and any protective caps shall be capable of being secured against unintended opening.

6.7.2.5.2 All openings in the shell, intended for filling or discharging the portable tank shall be fitted with a manually operated stop-valve located as close to the shell as reasonably practicable. Other openings, except for openings leading to venting or pressure-relief devices, shall be equipped with either a stop-valve or another suitable means of closure located as close to the shell as reasonably practicable.

6.7.2.5.3 All portable tanks shall be fitted with a manhole or other inspection openings of a suitable size to allow for internal inspection and adequate access for maintenance and repair of the interior. Compartmented portable tanks shall have a manhole or other inspection openings for each compartment.

6.7.2.5.4 As far as reasonably practicable, external fittings shall be grouped together. For insulated portable tanks, top fittings shall be surrounded by a spill collection reservoir with suitable drains.

6.7.2.5.5 Each connection to a portable tank shall be clearly marked to indicate its function.

6.7.2.5.6 Each stop-valve or other means of closure shall be designed and constructed to a rated pressure not less than the MAWP of the shell taking into account the temperatures expected during carriage. All stop-valves with screwed spindles shall close by a clockwise motion of the handwheel. For other stop-valves the position (open and closed) and direction of closure shall be clearly indicated. All stop-valves shall be designed to prevent unintentional opening.

6.7.2.5.7 No moving parts, such as covers, components of closures, etc., shall be made of unprotected corrodible steel when they are liable to come into frictional or percussive contact with aluminium portable tanks intended for the carriage of substances meeting the flash-point criteria of Class 3 including elevated temperature substances carried at or above their flash-point.

6.7.2.5.8 Piping shall be designed, constructed and installed so as to avoid the risk of damage due to thermal expansion and contraction, mechanical shock and vibration. All piping shall be of a suitable metallic material. Welded pipe joints shall be used wherever possible.

6.7.2.5.9 Joints in copper tubing shall be brazed or have an equally strong metal union. The melting point of brazing materials shall be no lower than 525 °C. The joints shall not decrease the strength of the tubing as may happen when cutting threads.

6.7.2.5.10 The burst pressure of all piping and pipe fittings shall be not less than the highest of four times the MAWP of the shell or four times the pressure to which it may be subjected in service by the action of a pump or other device (except pressure-relief devices).

6.7.2.5.11 Ductile metals shall be used in the construction of valves and accessories.

6.7.2.6 ***Bottom openings***

6.7.2.6.1 Certain substances shall not be carried in portable tanks with bottom openings. When the applicable portable tank instruction identified in Column (10) of Table A of Chapter 3.2 and described in 4.2.5.2.6 indicates that bottom openings are prohibited there shall be no openings below the liquid level of the shell when it is filled to its maximum permissible filling limit. When an existing opening is closed it shall be accomplished by internally and externally welding one plate to the shell.

6.7.2.6.2 Bottom discharge outlets for portable tanks carrying certain solid, crystallizable or highly viscous substances shall be equipped with not less than two serially fitted and mutually independent shut-off devices. The design of the equipment shall be to the satisfaction of the competent authority or its authorized body and shall include:

(a) An external stop-valve fitted as close to the shell as reasonably practicable; and

(b) A liquid tight closure at the end of the discharge pipe, which may be a bolted blank flange or a screw cap.

6.7.2.6.3 Every bottom discharge outlet, except as provided in 6.7.2.6.2, shall be equipped with three serially fitted and mutually independent shut-off devices. The design of the equipment shall be to the satisfaction of the competent authority or its authorized body and include:

(a) A self-closing internal stop-valve, that is a stop-valve within the shell or within a welded flange or its companion flange, such that:

(i) The control devices for the operation of the valve are designed so as to prevent any unintended opening through impact or other inadvertent act;

(ii) The valve may be operable from above or below;

(iii) If possible, the setting of the valve (open or closed) shall be capable of being verified from the ground;

(iv) Except for portable tanks having a capacity of not more than 1 000 litres, it shall be possible to close the valve from an accessible position of the portable tank that is remote from the valve itself; and

(v) The valve shall continue to be effective in the event of damage to the external device for controlling the operation of the valve;

(b) An external stop-valve fitted as close to the shell as reasonably practicable; and

(c) A liquid tight closure at the end of the discharge pipe, which may be a bolted blank flange or a screw cap.

6.7.2.6.4 For a lined shell, the internal stop-valve required by 6.7.2.6.3 (a) may be replaced by an additional external stop-valve. The manufacturer shall satisfy the requirements of the competent authority or its authorized body.

6.7.2.7 ***Safety-relief devices***

6.7.2.7.1 All portable tanks shall be fitted with at least one pressure-relief device. All relief devices shall be designed, constructed and marked to the satisfaction of the competent authority or its authorized body.

6.7.2.8 ***Pressure-relief devices***

6.7.2.8.1 Every portable tank with a capacity not less than 1 900 litres and every independent compartment of a portable tank with a similar capacity, shall be provided with one or more pressure-relief devices of the spring-loaded type and may in addition have a frangible disc or fusible element in parallel with the spring-loaded devices except when prohibited by reference to 6.7.2.8.3 in the applicable portable tank instruction in 4.2.5.2.6. The pressure-relief devices shall have sufficient capacity to prevent rupture of the shell due to over pressurization or vacuum resulting from filling, discharging, or from heating of the contents.

6.7.2.8.2 Pressure-relief devices shall be designed to prevent the entry of foreign matter, the leakage of liquid and the development of any dangerous excess pressure.

6.7.2.8.3 When required for certain substances by the applicable portable tank instruction indicated in Column (10) of Table A of Chapter 3.2 and described in 4.2.5.2.6, portable tanks shall have a pressure-relief device approved by the competent authority. Unless a portable tank in dedicated service is fitted with an approved relief device constructed of materials compatible with the substance carried, the relief device shall comprise a frangible disc preceding a spring-loaded pressure-relief device. When a frangible disc is inserted in series with the required pressure-relief device, the space between the frangible disc and the pressure-relief device shall be provided with a pressure gauge or suitable tell-tale indicator for the detection of disc rupture, pinholing, or leakage which could cause a malfunction of the pressure-relief system. The frangible disc shall rupture at a nominal pressure 10% above the start to discharge pressure of the relief device.

6.7.2.8.4 Every portable tank with a capacity less than 1 900 litres shall be fitted with a pressure-relief device which may be a frangible disc when this disc complies with the requirements of 6.7.2.11.1. When no spring-loaded pressure-relief device is used, the frangible disc shall be set to rupture at a nominal pressure equal to the test pressure.

6.7.2.8.5 When the shell is fitted for pressure discharge, the inlet line shall be provided with a suitable pressure-relief device set to operate at a pressure not higher than the MAWP of the shell, and a stop-valve shall be fitted as close to the shell as reasonably practicable.

6.7.2.9 ***Setting of pressure-relief devices***

6.7.2.9.1 It shall be noted that the pressure-relief devices shall operate only in conditions of excessive rise in temperature, since the shell shall not be subject to undue fluctuations of pressure during normal conditions of carriage (see 6.7.2.12.2).

6.7.2.9.2 The required pressure-relief device shall be set to start-to-discharge at a nominal pressure of five-sixths of the test pressure for shells having a test pressure of not more than 4.5 bar and 110% of two-thirds of the test pressure for shells having a test pressure of more than 4.5 bar. After discharge the device shall close at a pressure not more than 10% below the pressure at which the discharge starts. The device shall remain closed at all lower pressures. This requirement does not prevent the use of vacuum-relief or combination pressure-relief and vacuum-relief devices.

6.7.2.10 ***Fusible elements***

6.7.2.10.1 Fusible elements shall operate at a temperature between 110 °C and 149 °C on condition that the pressure in the shell at the fusing temperature will be not more than the test pressure. They shall be placed at the top of the shell with their inlets in the vapour space and in no case shall they be shielded from external heat. Fusible elements shall not be utilized on portable tanks with a test pressure which exceeds 2.65 bar. Fusible elements used on portable tanks intended for the carriage of elevated temperature substances shall be designed to operate at a temperature higher than the maximum temperature that will be experienced during carriage and shall be to the satisfaction of the competent authority or its authorized body.

6.7.2.11 ***Frangible discs***

6.7.2.11.1 Except as specified in 6.7.2.8.3, frangible discs shall be set to rupture at a nominal pressure equal to the test pressure throughout the design temperature range. Particular attention shall be given to the requirements of 6.7.2.5.1 and 6.7.2.8.3 if frangible discs are used.

6.7.2.11.2 Frangible discs shall be appropriate for the vacuum pressures which may be produced in the portable tank.

6.7.2.12 ***Capacity of pressure-relief devices***

6.7.2.12.1 The spring-loaded pressure-relief device required by 6.7.2.8.1 shall have a minimum cross sectional flow area equivalent to an orifice of 31.75 mm diameter. Vacuum-relief devices, when used, shall have a cross sectional flow area not less than 284 mm^2.

6.7.2.12.2 The combined delivery capacity of the pressure relief system (taking into account the reduction of the flow when the portable tank is fitted with frangible-discs preceding spring-loaded pressure-relief devices or when the spring-loaded pressure-relief devices are provided with a device to prevent the passage of the flame), in condition of complete fire engulfment of the portable tank shall be sufficient to limit the pressure in the shell to 20% above the start-to-discharge pressure of the pressure limiting device. Emergency pressure-relief devices may be used to achieve the full relief capacity prescribed. These devices may be fusible, spring loaded or frangible disc components, or a combination of spring-loaded and frangible disc devices. The total required capacity of the relief devices may be determined using the formula in 6.7.2.12.2.1 or the table in 6.7.2.12.2.3.

6.7.2.12.2.1 To determine the total required capacity of the relief devices, which shall be regarded as being the sum of the individual capacities of all the contributing devices, the following formula shall be used:

$$Q = 12.4 \frac{FA^{0.82}}{LC} \sqrt{\frac{ZT}{M}}$$

where:

Q = minimum required rate of discharge in cubic metres of air per second (m^3/s) at standard conditions: 1 bar and 0 °C (273 K);

F = is a coefficient with the following value:

for uninsulated shells: F = 1;

for insulated shells: F = U(649 - t)/13.6 but in no case is less than 0.25

where:

U = thermal conductance of the insulation, in $kW.m^{-2}.K^{-1}$, at 38 °C;

t = actual temperature of the substance during filling (in °C); when this temperature is unknown, let t = 15 °C;

The value of F given above for insulated shells may be taken provided that the insulation is in accordance with 6.7.2.12.2.4;

A = total external surface area of shell in m^2;

Z = the gas compressibility factor in the accumulating condition (when this factor is unknown, let Z =1.0);

T = absolute temperature in Kelvin (°C + 273) above the pressure-relief devices in the accumulating condition;

L = the latent heat of vaporization of the liquid, in kJ/kg, in the accumulating condition;

M = molecular mass of the discharged gas;

C = a constant which is derived from one of the following formulae as a function of the ratio k of specific heats:

$$k = \frac{c_p}{c_v}$$

where:

c_p is the specific heat at constant pressure; and
c_v is the specific heat at constant volume.

<u>When k>1</u>:

$$C = \sqrt{k\left(\frac{2}{k+1}\right)^{\frac{k+1}{k-1}}}$$

<u>When k = 1</u> or <u>k is unknown</u>:

$$C = \frac{1}{\sqrt{e}} = 0.607$$

where e is the mathematical constant 2.7183

C may also be taken from the following table:

k	C	k	C	k	C
1.00	0.607	1.26	0.660	1.52	0.704
1.02	0.611	1.28	0.664	1.54	0.707
1.04	0.615	1.30	0.667	1.56	0.710
1.06	0.620	1.32	0.671	1.58	0.713
1.08	0.624	1.34	0.674	1.60	0.716
1.10	0.628	1.36	0.678	1.62	0.719
1.12	0.633	1.38	0.681	1.64	0.722
1.14	0.637	1.40	0.685	1.66	0.725
1.16	0.641	1.42	0.688	1.68	0.728
1.18	0.645	1.44	0.691	1.70	0.731
1.20	0.649	1.46	0.695	2.00	0.770
1.22	0.652	1.48	0.698	2.20	0.793
1.24	0.656	1.50	0.701		

6.7.2.12.2.2 As an alternative to the formula above, shells designed for the carriage of liquids may have their relief devices sized in accordance with the table in 6.7.2.12.2.3. This table assumes an insulation value of $F = 1$ and shall be adjusted accordingly when the shell is insulated. Other values used in determining this table are:

M	=	86.7	T	=	394 K
L	=	334.94 kJ/kg	C	=	0.607
Z	=	1			

6.7.2.12.2.3 Minimum required rate of discharge, Q, in cubic metres per air per second at 1 bar and 0 °C (273 K)

A **Exposed area** **(square metres)**	**Q** **(cubic metres of air per second)**	**A** **Exposed area** **(square metres)**	**Q** **(cubic metres of air per second)**
2	0.230	37.5	2.539
3	0.320	40	2.677
4	0.405	42.5	2.814
5	0.487	45	2.949
6	0.565	47.5	3.082
7	0.641	50	3.215
8	0.715	52.5	3.346
9	0.788	55	3.476
10	0.859	57.5	3.605
12	0.998	60	3.733
14	1.132	62.5	3.860
16	1.263	65	3.987
18	1.391	67.5	4.112
20	1.517	70	4.236
22.5	1.670	75	4.483
25	1.821	80	4.726
27.5	1.969	85	4.967
30	2.115	90	5.206
32.5	2.258	95	5.442
35	2.400	100	5.676

6.7.2.12.2.4 Insulation systems, used for the purpose of reducing venting capacity, shall be approved by the competent authority or its authorized body. In all cases, insulation systems approved for this purpose shall:

(a) Remain effective at all temperatures up to 649 °C; and

(b) Be jacketed with a material having a melting point of 700 °C or greater.

6.7.2.13 ***Marking of pressure-relief devices***

6.7.2.13.1 Every pressure-relief device shall be clearly and permanently marked with the following particulars:

(a) The pressure (in bar or kPa) or temperature (in °C) at which it is set to discharge;

(b) The allowable tolerance at the discharge pressure for spring-loaded devices;

(c) The reference temperature corresponding to the rated pressure for frangible discs;

(d) The allowable temperature tolerance for fusible elements; and

(e) The rated flow capacity of the spring-loaded pressure relief devices, frangible discs or fusible elements in standard cubic metres of air per second (m^3/s);

When practicable, the following information shall also be shown:

(f) The manufacturer's name and relevant catalogue number of the device.

6.7.2.13.2 The rated flow capacity marked on the spring-loaded pressure-relief devices shall be determined according to ISO 4126-1:1991.

6.7.2.14 ***Connections to pressure-relief devices***

6.7.2.14.1 Connections to pressure-relief devices shall be of sufficient size to enable the required discharge to pass unrestricted to the safety device. No stop-valve shall be installed between the shell and the pressure-relief devices except where duplicate devices are provided for maintenance or other reasons and the stop-valves serving the devices actually in use are locked open or the stop-valves are interlocked so that at least one of the duplicate devices is always in use. There shall be no obstruction in an opening leading to a vent or pressure-relief device which might restrict or cut-off the flow from the shell to that device. Vents or pipes from the pressure-relief device outlets, when used, shall deliver the relieved vapour or liquid to the atmosphere in conditions of minimum back-pressure on the relieving devices.

6.7.2.15 ***Siting of pressure-relief devices***

6.7.2.15.1 Each pressure-relief device inlet shall be situated on top of the shell in a position as near the longitudinal and transverse centre of the shell as reasonably practicable. All pressure-relief device inlets shall under maximum filling conditions be situated in the vapour space of the shell and the devices shall be so arranged as to ensure the escaping vapour is discharged unrestrictedly. For flammable substances, the escaping vapour shall be directed away from the shell in such a manner that it cannot impinge upon the shell. Protective devices which deflect the flow of vapour are permissible provided the required relief-device capacity is not reduced.

6.7.2.15.2 Arrangements shall be made to prevent access to the pressure-relief devices by unauthorized persons and to protect the devices from damage caused by the portable tank overturning.

6.7.2.16 ***Gauging devices***

6.7.2.16.1 Glass level-gauges and gauges made of other fragile material, which are in direct communication with the contents of the tank shall not be used.

6.7.2.17 ***Portable tank supports, frameworks, lifting and tie-down attachments***

6.7.2.17.1 Portable tanks shall be designed and constructed with a support structure to provide a secure base during carriage. The forces specified in 6.7.2.2.12 and the safety factor specified in 6.7.2.2.13 shall be considered in this aspect of the design. Skids, frameworks, cradles or other similar structures are acceptable.

6.7.2.17.2 The combined stresses caused by portable tank mountings (e.g. cradles, framework, etc.) and portable tank lifting and tie-down attachments shall not cause excessive stress in any portion of the shell. Permanent lifting and tie-down attachments shall be fitted to all portable tanks. Preferably they shall be fitted to the portable tank supports but may be secured to reinforcing plates located on the shell at the points of support.

6.7.2.17.3 In the design of supports and frameworks the effects of environmental corrosion shall be taken into account.

6.7.2.17.4 Forklift pockets shall be capable of being closed off. The means of closing forklift pockets shall be a permanent part of the framework or permanently attached to the framework. Single compartment portable tanks with a length less than 3.65 m need not have closed off forklift pockets provided that:

(a) The shell including all the fittings are well protected from being hit by the forklift blades; and

(b) The distance between the centres of the forklift pockets is at least half of the maximum length of the portable tank.

6.7.2.17.5 When portable tanks are not protected during carriage, according to 4.2.1.2, the shells and service equipment shall be protected against damage to the shell and service equipment resulting from lateral or longitudinal impact or overturning. External fittings shall be protected so as to preclude the release of the shell contents upon impact or overturning of the portable tank on its fittings. Examples of protection include:

(a) Protection against lateral impact which may consist of longitudinal bars protecting the shell on both sides at the level of the median line;

(b) Protection of the portable tank against overturning which may consist of reinforcement rings or bars fixed across the frame;

(c) Protection against rear impact which may consist of a bumper or frame;

(d) Protection of the shell against damage from impact or overturning by use of an ISO frame in accordance with ISO 1496-3:1995.

6.7.2.18 ***Design approval***

6.7.2.18.1 The competent authority or its authorized body shall issue a design approval certificate for any new design of a portable tank. This certificate shall attest that a portable tank has been surveyed by that authority, is suitable for its intended purpose and meets the requirements of this Chapter and where appropriate, the provisions for substances provided in Chapter 4.2 and in Table A of Chapter 3.2. When a series of portable tanks are manufactured without change in the design, the certificate shall be valid for the entire series. The certificate shall refer to the prototype test report, the substances or group of substances allowed to be carried, the materials of construction of the shell and lining (when applicable) and an approval number. The approval number shall consist of the distinguishing sign or mark of the State in whose territory the approval was granted, i.e. the distinguishing sign for use in international

traffic as prescribed by the Convention on Road Traffic, Vienna 1968, and a registration number. Any alternative arrangements according to 6.7.1.2 shall be indicated on the certificate. A design approval may serve for the approval of smaller portable tanks made of materials of the same kind and thickness, by the same fabrication techniques and with identical supports, equivalent closures and other appurtenances.

6.7.2.18.2 The prototype test report for the design approval shall include at least the following:

(a) The results of the applicable framework test specified in ISO 1496-3:1995;

(b) The results of the initial inspection and test according to 6.7.2.19.3; and

(c) The results of the impact test in 6.7.2.19.1, when applicable.

6.7.2.19 ***Inspection and testing***

6.7.2.19.1 For portable tanks meeting the definition of container in the CSC, a prototype representing each design shall be subjected to an impact test. The prototype portable tank shall be shown to be capable of absorbing the forces resulting from an impact not less than 4 times (4 g) the MPGM of the fully loaded portable tank at a duration typical of the mechanical shocks experienced in rail transport. The following is a listing of standards describing methods acceptable for performing the impact test:

Association of American Railroads,
Manual of Standards and Recommended Practices,
Specifications for Acceptability of Tank Containers (AAR.600), 1992

National Standard of Canada, CAN/CGSB-43.147-2002, "Construction, Modification, Qualification, Maintenance, and Selection and Use of Means of Containment for the Handling, Offering for Transport or Transporting of Dangerous Goods by Rail", March 2002, published by the Canadian General Standards Board (CGSB).

Deutsche Bahn AG
DB Systemtechnik, Minden
Verifikation und Versuche, TZF 96.2
Portable tanks, longitudinal impact test

Société Nationale des Chemins de Fer Français
C.N.E.S.T. 002-1966.
Tank containers, longitudinal external stresses and dynamic impact tests

Spoornet, South Africa
Engineering Development Centre (EDC)
Testing of ISO Tank Containers
Method EDC/TES/023/000/1991-06

6.7.2.19.2 The shell and items of equipment of each portable tank shall be inspected and tested before being put into service for the first time (initial inspection and test) and thereafter at not more than five-year intervals (5 year periodic inspection and test) with an intermediate periodic inspection and test (2.5 year periodic inspection and test) midway between the 5 year periodic inspections and tests. The 2.5 year inspection and test may be performed within 3 months of the specified date. An exceptional inspection and test shall be performed regardless of the date of the last periodic inspection and test when necessary according to 6.7.2.19.7.

6.7.2.19.3 The initial inspection and test of a portable tank shall include a check of the design characteristics, an internal and external examination of the portable tank and its fittings with due regard to the substances to be carried, and a pressure test. Before the portable tank is placed into service, a leakproofness test and a check of the satisfactory operation of all service equipment shall also be performed. When the shell and its fittings have been pressure-tested separately, they shall be subjected together after assembly to a leakproofness test.

6.7.2.19.4 The 5-year periodic inspection and test shall include an internal and external examination and, as a general rule, a hydraulic pressure test. Sheathing, thermal insulation and the like shall be removed only to the extent required for reliable appraisal of the condition of the portable tank. When the shell and equipment have been pressure-tested separately, they shall be subjected together after assembly to a leakproofness test.

6.7.2.19.5 The intermediate 2.5 year periodic inspection and test shall at least include an internal and external examination of the portable tank and its fittings with due regard to the substances intended to be carried, a leakproofness test and a check of the satisfactory operation of all service equipment. Sheathing, thermal insulation and the like shall be removed only to the extent required for reliable appraisal of the condition of the portable tank. For portable tanks intended for the carriage of a single substance, the 2.5 year internal examination may be waived or substituted by other test methods or inspection procedures specified by the competent authority or its authorized body.

6.7.2.19.6 A portable tank may not be filled and offered for carriage after the date of expiry of the last 5 year or 2.5 year periodic inspection and test as required by 6.7.2.19.2. However, a portable tank filled prior to the date of expiry of the last periodic inspection and test may be carried for a period not to exceed three months beyond the date of expiry of the last periodic test or inspection. In addition, a portable tank may be carried after the date of expiry of the last periodic test and inspection:

(a) After emptying but before cleaning, for purposes of performing the next required test or inspection prior to refilling; and

(b) Unless otherwise approved by the competent authority, for a period not to exceed six months beyond the date of expiry of the last periodic test or inspection, in order to allow the return of dangerous goods for proper disposal or recycling. Reference to this exemption shall be mentioned in the transport document.

6.7.2.19.7 The exceptional inspection and test is necessary when the portable tank shows evidence of damaged or corroded areas, or leakage, or other conditions that indicate a deficiency that could affect the integrity of the portable tank. The extent of the exceptional inspection and test shall depend on the amount of damage or deterioration of the portable tank. It shall include at least the 2.5 year inspection and test according to 6.7.2.19.5.

6.7.2.19.8 The internal and external examinations shall ensure that:

(a) The shell is inspected for pitting, corrosion, or abrasions, dents, distortions, defects in welds or any other conditions, including leakage, that might render the portable tank unsafe for carriage;

(b) The piping, valves, heating/cooling system, and gaskets are inspected for corroded areas, defects, or any other conditions, including leakage, that might render the portable tank unsafe for filling, discharge or carriage;

(c) Devices for tightening manhole covers are operative and there is no leakage at manhole covers or gaskets;

(d) Missing or loose bolts or nuts on any flanged connection or blank flange are replaced or tightened;

(e) All emergency devices and valves are free from corrosion, distortion and any damage or defect that could prevent their normal operation. Remote closure devices and self-closing stop-valves shall be operated to demonstrate proper operation;

(f) Linings, if any, are inspected in accordance with criteria outlined by the lining manufacturer;

(g) Required markings on the portable tank are legible and in accordance with the applicable requirements; and

(h) The framework, supports and arrangements for lifting the portable tank are in a satisfactory condition.

6.7.2.19.9 The inspections and tests in 6.7.2.19.1, 6.7.2.19.3, 6.7.2.19.4, 6.7.2.19.5 and 6.7.2.19.7 shall be performed or witnessed by an expert approved by the competent authority or its authorized body. When the pressure test is a part of the inspection and test, the test pressure shall be the one indicated on the data plate of the portable tank. While under pressure, the portable tank shall be inspected for any leaks in the shell, piping or equipment.

6.7.2.19.10 In all cases when cutting, burning or welding operations on the shell have been effected, that work shall be to the approval of the competent authority or its authorized body taking into account the pressure vessel code used for the construction of the shell. A pressure test to the original test pressure shall be performed after the work is completed.

6.7.2.19.11 When evidence of any unsafe condition is discovered, the portable tank shall not be returned to service until it has been corrected and the test is repeated and passed.

6.7.2.20 ***Marking***

6.7.2.20.1 Every portable tank shall be fitted with a corrosion resistant metal plate permanently attached to the portable tank in a conspicuous place readily accessible for inspection. When for reasons of portable tank arrangements the plate cannot be permanently attached to the shell, the shell shall be marked with at least the information required by the pressure vessel code. As a minimum at least the following information shall be marked on the plate by stamping or by any other similar method.

Country of manufacture
U Approval Approval For Alternative Arrangements (see 6.7.1.2)
N country number "AA"
Manufacturer's name or mark
Manufacturer's serial number
Authorized body for the design approval
Owner's registration number
Year of manufacture
Pressure vessel code to which the shell is designed
Test pressure _____bar/kPa (gauge pressure) [2]
MAWP_____ bar/kPa (gauge pressure) [2]
External design pressure [3] _____ bar/kPa (gauge pressure) [2]
Design temperature range_____ °C to_____°C

[2] *The unit used shall be marked.*

[3] *See 6.7.2.2.10.*

Water capacity at 20 °C _____litres
Water capacity of each compartment at 20 °C _____ litres
Initial pressure test date and witness identification
MAWP for heating/cooling system _____ bar/kPa (gauge pressure) [2]
Shell material(s) and material standard reference(s)
Equivalent thickness in reference steel _____mm
Lining material (when applicable)
Date and type of most recent periodic test(s)
Month_____ Year_____ Test pressure_____bar/kPa (gauge pressure) [2]
Stamp of expert who performed or witnessed the most recent test

6.7.2.20.2 The following particulars shall be marked either on the portable tank itself or on a metal plate firmly secured to the portable tank:

Name of the operator
Name of substance(s) being carried and maximum mean bulk temperature when higher than 50 °C
Maximum permissible gross mass (MPGM) _____ kg
Unladen (tare) mass _____ kg

***NOTE**: For the identification of the substances being carried, see also Part 5.*

6.7.2.20.3 If a portable tank is designed and approved for handling in open seas, the words "OFFSHORE PORTABLE TANK" shall be marked on the identification plate.

6.7.3 Requirements for the design, construction, inspection and testing of portable tanks intended for the carriage of non-refrigerated liquefied gases

6.7.3.1 *Definitions*

For the purposes of this section:

Alternative arrangement means an approval granted by the competent authority for a portable tank or MEGC that has been designed, constructed or tested to technical requirements or testing methods other than those specified in this Chapter;

Portable tank means a multimodal tank having a capacity of more than 450 litres used for the carriage of non-refrigerated liquefied gases of Class 2. The portable tank includes a shell fitted with service equipment and structural equipment necessary for the carriage of gases. The portable tank shall be capable of being filled and discharged without the removal of its structural equipment. It shall possess stabilizing members external to the shell, and shall be capable of being lifted when full. It shall be designed primarily to be loaded onto a transport vehicle or ship and shall be equipped with skids, mountings or accessories to facilitate mechanical handling. Tank-vehicles, tank-wagons, non-metallic tanks, intermediate bulk containers (IBCs), gas cylinders and large receptacles are not considered to fall within the definition for portable tanks;

Shell means the part of the portable tank which retains the non-refrigerated liquefied gas intended for carriage (tank proper), including openings and their closures, but does not include service equipment or external structural equipment;

Service equipment means measuring instruments and filling, discharge, venting, safety and insulating devices;

[2] *The unit used shall be marked.*

Structural equipment means the reinforcing, fastening, protective and stabilizing members external to the shell;

Maximum allowable working pressure (MAWP) means a pressure that shall be not less than the highest of the following pressures measured at the top of the shell while in operating position, but in no case less than 7 bar:

(a) The maximum effective gauge pressure allowed in the shell during filling or discharge; or

(b) The maximum effective gauge pressure to which the shell is designed, which shall be:

(i) for a non-refrigerated liquefied gas listed in the portable tank instruction T50 in 4.2.5.2.6, the MAWP (in bar) given in T50 portable tank instruction for that gas;

(ii) for other non-refrigerated liquefied gases, not less than the sum of:

- the absolute vapour pressure (in bar) of the non-refrigerated liquefied gas at the design reference temperature minus 1 bar; and

- the partial pressure (in bar) of air or other gases in the ullage space being determined by the design reference temperature and the liquid phase expansion due to an increase of the mean bulk temperature of $t_r - t_f$ (t_f = filling temperature, usually 15 °C, t_r = maximum mean bulk temperature, 50 °C);

Design pressure means the pressure to be used in calculations required by a recognized pressure vessel code. The design pressure shall be not less than the highest of the following pressures:

(a) The maximum effective gauge pressure allowed in the shell during filling or discharge; or

(b) The sum of:

(i) the maximum effective gauge pressure to which the shell is designed as defined in (b) of the MAWP definition (see above); and

(ii) a head pressure determined on the basis of the static forces specified in 6.7.3.2.9, but not less than 0.35 bar;

Test pressure means the maximum gauge pressure at the top of the shell during the pressure test;

Leakproofness test means a test using gas subjecting the shell and its service equipment to an effective internal pressure of not less than 25% of the MAWP;

Maximum permissible gross mass (MPGM) means the sum of the tare mass of the portable tank and the heaviest load authorized for carriage;

Reference steel means a steel with a tensile strength of 370 N/mm^2 and an elongation at fracture of 27%;

Mild steel means a steel with a guaranteed minimum tensile strength of 360 N/mm^2 to 440 N/mm^2 and a guaranteed minimum elongation at fracture conforming to 6.7.3.3.3.3;

Design temperature range for the shell shall be -40 °C to 50 °C for non-refrigerated liquefied gases carried under ambient conditions. More severe design temperatures shall be considered for portable tanks subjected to severe climatic conditions;

Design reference temperature means the temperature at which the vapour pressure of the contents is determined for the purpose of calculating the MAWP. The design reference temperature shall be less than the critical temperature of the non-refrigerated liquefied gas intended to be carried to ensure that the gas at all times is liquefied. This value for each portable tank type is as follows:

(a) Shell with a diameter of 1.5 metres or less: 65 °C;

(b) Shell with a diameter of more than 1.5 metres:

(i) without insulation or sun shield: 60 °C;

(ii) with sun shield (see 6.7.3.2.12): 55 °C; and

(iii) with insulation (see 6.7.3.2.12) : 50 °C;

Filling density means the average mass of non-refrigerated liquefied gas per litre of shell capacity (kg/l). The filling density is given in portable tank instruction T50 in 4.2.5.2.6.

6.7.3.2 ***General design and construction requirements***

6.7.3.2.1 Shells shall be designed and constructed in accordance with the requirements of a pressure vessel code recognized by the competent authority. Shells shall be made of steel suitable for forming. The materials shall in principle conform to national or international material standards. For welded shells, only a material whose weldability has been fully demonstrated shall be used. Welds shall be skilfully made and afford complete safety. When the manufacturing process or the materials make it necessary, the shells shall be suitability heat-treated to guarantee adequate toughness in the weld and in the heat affected zones. In choosing the material the design temperature range shall be taken into account with respect to risk of brittle fracture, to stress corrosion cracking and to resistance to impact. When fine grain steel is used, the guaranteed value of the yield strength shall be not more than 460 N/mm^2 and the guaranteed value of the upper limit of the tensile strength shall be not more than 725 N/mm^2 according to the material specification. Portable tank materials shall be suitable for the external environment in which they may be carried.

6.7.3.2.2 Portable tank shells, fittings and pipework shall be constructed of materials which are:

(a) Substantially immune to attack by the non-refrigerated liquefied gas(es) intended to be carried; or

(b) Properly passivated or neutralized by chemical reaction.

6.7.3.2.3 Gaskets shall be made of materials compatible with the non-refrigerated liquefied gas(es) intended to be carried.

6.7.3.2.4 Contact between dissimilar metals which could result in damage by galvanic action shall be avoided.

6.7.3.2.5 The materials of the portable tank, including any devices, gaskets, and accessories, shall not adversely affect the non-refrigerated liquefied gas(es) intended for carriage in the portable tank.

6.7.3.2.6 Portable tanks shall be designed and constructed with supports to provide a secure base during carriage and with suitable lifting and tie-down attachments.

6.7.3.2.7 Portable tanks shall be designed to withstand, without loss of contents, at least the internal pressure due to the contents, and the static, dynamic and thermal loads during normal conditions of handling and carriage. The design shall demonstrate that the effects of fatigue, caused by repeated application of these loads through the expected life of the portable tank, have been taken into account.

6.7.3.2.8 Shells shall be designed to withstand an external pressure of at least 0.4 bar (gauge pressure) above the internal pressure without permanent deformation. When the shell is to be subjected to a significant vacuum before filling or during discharge it shall be designed to withstand an external pressure of at least 0.9 bar (gauge pressure) above the internal pressure and shall be proven at that pressure.

6.7.3.2.9 Portable tanks and their fastenings shall, under the maximum permissible load, be capable of absorbing the following separately applied static forces:

(a) In the direction of travel: twice the MPGM multiplied by the acceleration due to gravity (g) [1] ;

(b) Horizontally at right angles to the direction of travel: the MPGM (when the direction of travel is not clearly determined, the forces shall be equal to twice the MPGM) multiplied by the acceleration due to gravity (g) [1] ;

(c) Vertically upwards: the MPGM multiplied by the acceleration due to gravity (g) [1]; and

(d) Vertically downwards: twice the MPGM (total loading including the effect of gravity) multiplied by the acceleration due to gravity (g) [1].

6.7.3.2.10 Under each of the forces in 6.7.3.2.9, the safety factor to be observed shall be as follows:

(a) For steels having a clearly defined yield point, a safety factor of 1.5 in relation to the guaranteed yield strength; or

(b) For steels with no clearly defined yield point, a safety factor of 1.5 in relation to the guaranteed 0.2% proof strength and, for austenitic steels, the 1% proof strength.

6.7.3.2.11 The values of yield strength or proof strength shall be the values according to national or international material standards. When austenitic steels are used, the specified minimum values of yield strength and proof strength according to the material standards may be increased by up to 15% when these greater values are attested in the material inspection certificate. When no material standard exists for the steel in question, the value of yield strength or proof strength used shall be approved by the competent authority.

6.7.3.2.12 When the shells intended for the carriage of non-refrigerated liquefied gases are equipped with thermal insulation, the thermal insulation systems shall satisfy the following requirements:

(a) It shall consist of a shield covering not less than the upper third but not more than the upper half of the surface of the shell and separated from the shell by an air space about 40 mm across;

(b) It shall consist of a complete cladding of adequate thickness of insulating materials protected so as to prevent the ingress of moisture and damage under normal conditions of carriage and so as to provide a thermal conductance of not more than 0.67 ($W.m^{-2}.K^{-1}$);

---

[1] *For calculation purposes g = 9.81 m/s^2.*

(c) When the protective covering is so closed as to be gas-tight, a device shall be provided to prevent any dangerous pressure from developing in the insulating layer in the event of inadequate gas tightness of the shell or of its items of equipment; and

(d) The thermal insulation shall not inhibit access to the fittings and discharge devices.

6.7.3.2.13 Portable tanks intended for the carriage of flammable non-refrigerated liquefied gases shall be capable of being electrically earthed.

6.7.3.3 ***Design criteria***

6.7.3.3.1 Shells shall be of a circular cross-section.

6.7.3.3.2 Shells shall be designed and constructed to withstand a test pressure not less than 1.3 times the design pressure. The shell design shall take into account the minimum MAWP values provided in portable tank instruction T50 in 4.2.5.2.6 for each non-refrigerated liquefied gas intended for carriage. Attention is drawn to the minimum shell thickness requirements for these shells specified in 6.7.3.4.

6.7.3.3.3 For steels exhibiting a clearly defined yield point or characterized by a guaranteed proof strength (0.2% proof strength, generally, or 1% proof strength for austenitic steels) the primary membrane stress σ (sigma) in the shell shall not exceed 0.75 Re or 0.50 Rm, whichever is lower, at the test pressure, where:

Re = yield strength in N/mm^2, or 0.2% proof strength or, for austenitic steels, 1% proof stress;

Rm = minimum tensile strength in N/mm^2.

6.7.3.3.3.1 The values of Re and Rm to be used shall be the specified minimum values according to national or international material standards. When austenitic steels are used, the specified minimum values for Re and Rm according to the material standards may be increased by up to 15% when these greater values are attested in the material inspection certificate. When no material standard exists for the steel in question, the values of Re and Rm used shall be approved by the competent authority or its authorized body.

6.7.3.3.3.2 Steels which have a Re/Rm ratio of more than 0.85 are not allowed for the construction of welded shells. The values of Re and Rm to be used in determining this ratio shall be the values specified in the material inspection certificate.

6.7.3.3.3.3 Steels used in the construction of shells shall have an elongation at fracture, in %, of not less than 10 000/Rm with an absolute minimum of 16% for fine grain steels and 20% for other steels.

6.7.3.3.3.4 For the purpose of determining actual values for materials, it shall be noted that for sheet metal, the axis of the tensile test specimen shall be at right angles (transversely) to the direction of rolling. The permanent elongation at fracture shall be measured on test specimens of rectangular cross sections in accordance with ISO 6892:1998 using a 50 mm gauge length.

6.7.3.4 ***Minimum shell thickness***

6.7.3.4.1 The minimum shell thickness shall be the greater thickness based on:

(a) The minimum thickness determined in accordance with the requirements in 6.7.3.4; and

(b) The minimum thickness determined in accordance with the recognized pressure vessel code including the requirements in 6.7.3.3.

6.7.3.4.2 The cylindrical portions, ends (heads) and manhole covers of shells of not more than 1.80 m in diameter shall be not less than 5 mm thick in the reference steel or of equivalent thickness in the steel to be used. Shells of more than 1.80 m in diameter shall be not less than 6 mm thick in the reference steel or of equivalent thickness in the steel to be used.

6.7.3.4.3 The cylindrical portions, ends (heads) and manhole covers of all shells shall be not less than 4 mm thick regardless of the material of construction.

6.7.3.4.4 The equivalent thickness of a steel other than the thickness prescribed for the reference steel in 6.7.3.4.2 shall be determined using the following formula:

$$e_1 = \frac{21{,}4 e_o}{\sqrt[3]{Rm_1 \times A_1}}$$

where:

e_1 = required equivalent thickness (in mm) of the steel to be used;

e_0 = minimum thickness (in mm) for the reference steel specified in 6.7.3.4.2;

Rm_1 = guaranteed minimum tensile strength (in N/mm^2) of the steel to be used (see 6.7.3.3.3);

A_1 = guaranteed minimum elongation at fracture (in %) of the steel to be used according to national or international standards.

6.7.3.4.5 In no case shall the wall thickness be less than that prescribed in 6.7.3.4.1 to 6.7.3.4.3. All parts of the shell shall have a minimum thickness as determined by 6.7.3.4.1 to 6.7.3.4.3. This thickness shall be exclusive of any corrosion allowance.

6.7.3.4.6 When mild steel is used (see 6.7.3.1), calculation using the formula in 6.7.3.4.4 is not required.

6.7.3.4.7 There shall be no sudden change of plate thickness at the attachment of the ends (heads) to the cylindrical portion of the shell.

6.7.3.5 ***Service equipment***

6.7.3.5.1 Service equipment shall be so arranged as to be protected against the risk of being wrenched off or damaged during handling and carriage. When the connection between the frame and the shell allows relative movement between the sub-assemblies, the equipment shall be so fastened as to permit such movement without risk of damage to working parts. The external discharge fittings (pipe sockets, shut-off devices), the internal stop-valve and its seating shall be protected against the danger of being wrenched off by external forces (for example using shear sections). The filling and discharge devices (including flanges or threaded plugs) and any protective caps shall be capable of being secured against unintended opening.

6.7.3.5.2 All openings with a diameter of more than 1.5 mm in shells of portable tanks, except openings for pressure-relief devices, inspection openings and closed bleed holes, shall be fitted with at least three mutually independent shut-off devices in series, the first being an internal stop-valve, excess flow valve or equivalent device, the second being an external stop-valve and the third being a blank flange or equivalent device.

6.7.3.5.2.1 When a portable tank is fitted with an excess flow valve, the excess flow valve shall be so fitted that its seating is inside the shell or inside a welded flange or, when fitted externally, its mountings shall be designed so that in the event of impact its effectiveness shall be maintained. The excess flow valves shall be selected and fitted so as to close automatically when the rated flow specified by the manufacturer is reached. Connections and accessories leading to or from such a valve shall have a capacity for a flow more than the rated flow of the excess flow valve.

6.7.3.5.3 For filling and discharge openings, the first shut-off device shall be an internal stop-valve and the second shall be a stop-valve placed in an accessible position on each discharge and filling pipe.

6.7.3.5.4 For filling and discharge bottom openings of portable tanks intended for the carriage of flammable and/or toxic non-refrigerated liquefied gases the internal stop-valve shall be a quick closing safety device which closes automatically in the event of unintended movement of the portable tank during filling or discharge or fire engulfment. Except for portable tanks having a capacity of not more than 1 000 litres, it shall be possible to operate this device by remote control.

6.7.3.5.5 In addition to filling, discharge and gas pressure equalizing orifices, shells may have openings in which gauges, thermometers and manometers can be fitted. Connections for such instruments shall be made by suitable welded nozzles or pockets and not be screwed connections through the shell.

6.7.3.5.6 All portable tanks shall be fitted with manholes or other inspection openings of suitable size to allow for internal inspection and adequate access for maintenance and repair of the interior.

6.7.3.5.7 External fittings shall be grouped together so far as reasonably practicable.

6.7.3.5.8 Each connection on a portable tank shall be clearly marked to indicate its function.

6.7.3.5.9 Each stop-valve or other means of closure shall be designed and constructed to a rated pressure not less than the MAWP of the shell taking into account the temperatures expected during carriage. All stop-valves with a screwed spindle shall close by a clockwise motion of the handwheel. For other stop-valves the position (open and closed) and direction of closure shall be clearly indicated. All stop-valves shall be designed to prevent unintentional opening.

6.7.3.5.10 Piping shall be designed, constructed and installed so as to avoid the risk of damage due to thermal expansion and contraction, mechanical shock and vibration. All piping shall be of suitable metallic material. Welded pipe joints shall be used wherever possible.

6.7.3.5.11 Joints in copper tubing shall be brazed or have an equally strong metal union. The melting point of brazing materials shall be no lower than 525 °C. The joints shall not decrease the strength of tubing as may happen when cutting threads.

6.7.3.5.12 The burst pressure of all piping and pipe fittings shall be not less than the highest of four times the MAWP of the shell or four times the pressure to which it may be subjected in service by the action of a pump or other device (except pressure-relief devices).

6.7.3.5.13 Ductile metals shall be used in the construction of valves and accessories.

6.7.3.6 ***Bottom openings***

6.7.3.6.1 Certain non-refrigerated liquefied gases shall not be carried in portable tanks with bottom openings when portable tank instruction T50 in 4.2.5.2.6 indicates that bottom openings are

not allowed. There shall be no openings below the liquid level of the shell when it is filled to its maximum permissible filling limit.

6.7.3.7 ***Pressure-relief devices***

6.7.3.7.1 Portable tanks shall be provided with one or more spring-loaded pressure-relief devices. The pressure-relief devices shall open automatically at a pressure not less than the MAWP and be fully open at a pressure equal to 110% of the MAWP. These devices shall, after discharge, close at a pressure not lower than 10% below the pressure at which discharge starts and shall remain closed at all lower pressures. The pressure-relief devices shall be of a type that will resist dynamic forces including liquid surge. Frangible discs not in series with a spring-loaded pressure-relief device are not permitted.

6.7.3.7.2 Pressure-relief devices shall be designed to prevent the entry of foreign matter, the leakage of gas and the development of any dangerous excess pressure.

6.7.3.7.3 Portable tanks intended for the carriage of certain non-refrigerated liquefied gases identified in portable tank instruction T50 in 4.2.5.2.6 shall have a pressure-relief device approved by the competent authority. Unless a portable tank in dedicated service is fitted with an approved relief device constructed of materials compatible with the load, such device shall comprise a frangible disc preceding a spring-loaded device. The space between the frangible disc and the device shall be provided with a pressure gauge or a suitable tell-tale indicator. This arrangement permits the detection of disc rupture, pinholing or leakage which could cause a malfunction of the pressure-relief device. The frangible discs shall rupture at a nominal pressure 10% above the start-to-discharge pressure of the relief device.

6.7.3.7.4 In the case of multi-purpose portable tanks, the pressure-relief devices shall open at a pressure indicated in 6.7.3.7.1 for the gas having the highest maximum allowable pressure of the gases allowed to be carried in the portable tank.

6.7.3.8 ***Capacity of relief devices***

6.7.3.8.1 The combined delivery capacity of the relief devices shall be sufficient that, in the event of total fire engulfment, the pressure (including accumulation) inside the shell does not exceed 120% of the MAWP. Spring-loaded relief devices shall be used to achieve the full relief capacity prescribed. In the case of multi-purpose tanks, the combined delivery capacity of the pressure-relief devices shall be taken for the gas which requires the highest delivery capacity of the gases allowed to be carried in portable tanks.

6.7.3.8.1.1 To determine the total required capacity of the relief devices, which shall be regarded as being the sum of the individual capacities of the several devices, the following formulae [4] shall be used:

$$Q = 12.4 \frac{FA^{0.82}}{LC} \sqrt{\frac{ZT}{M}}$$

where:

Q = minimum required rate of discharge in cubic metres of air per second (m^3/s) at standard conditions: 1 bar and 0 °C (273 K);

F = is a coefficient with the following value:

[4] *This formula applies only to non-refrigerated liquefied gases which have critical temperatures well above the temperature at the accumulating condition. For gases which have critical temperatures near or below the temperature at the accumulating condition, the calculation of the pressure-relief device delivery capacity shall consider further thermodynamic properties of the gas (see for example CGA S-1.2-1995).*

for uninsulated shells: F = 1;

for insulated shells: F = U(649-t)/13.6 but in no case is less than 0.25

where:

U = thermal conductance of the insulation, in $Kw.m^{-2}.K^{-1}$, at 38 °C;

t = actual temperature of the non-refrigerated liquefied gas during filling (°C); when this temperature is unknown, let *t*=15 °C;

The value of F given above for insulated shells may be taken provided that the insulation is in accordance with 6.7.3.8.1.2;

where:

A = total external surface area of shell in square metres;

Z = the gas compressibility factor in the accumulating condition (when this factor is unknown, let Z =1.0);

T = absolute temperature in Kelvin (°C + 273) above the pressure relief devices in the accumulating condition;

L = the latent heat of vaporization of the liquid, in kJ/kg, in the accumulating condition;

M = molecular mass of the discharged gas;

C = a constant which is derived from one of the following formulae as a function of the ratio k of specific heats

$$k = \frac{c_p}{c_v}$$

where

c_p is the specific heat at constant pressure; and

c_v is the specific heat at constant volume.

<u>when k>1</u>:

$$C = \sqrt{k\left(\frac{2}{k+1}\right)^{\frac{k+1}{k-1}}}$$

<u>when k = 1</u> or <u>k is unknown</u>:

$$C = \frac{1}{\sqrt{e}} = 0.607$$

where e is the mathematical constant 2.7183

C may also be taken from the following table:

k	C	k	C	k	C
1.00	0.607	1.26	0.660	1.52	0.704
1.02	0.611	1.28	0.664	1.54	0.707
1.04	0.615	1.30	0.667	1.56	0.710
1.06	0.620	1.32	0.671	1.58	0.713
1.08	0.624	1.34	0.674	1.60	0.716
1.10	0.628	1.36	0.678	1.62	0.719
1.12	0.633	1.38	0.681	1.64	0.722
1.14	0.637	1.40	0.685	1.66	0.725
1.16	0.641	1.42	0.688	1.68	0.728
1.18	0.645	1.44	0.691	1.70	0.731
1.20	0.649	1.46	0.695	2.00	0.770
1.22	0.652	1.48	0.698	2.20	0.793
1.24	0.656	1.50	0.701		

6.7.3.8.1.2 Insulation systems, used for the purpose of reducing the venting capacity, shall be approved by the competent authority or its authorized body. In all cases, insulation systems approved for this purpose shall:

(a) Remain effective at all temperatures up to 649 °C; and

(b) Be jacketed with a material having a melting point of 700 °C or greater.

6.7.3.9 ***Marking of pressure-relief devices***

6.7.3.9.1 Every pressure-relief device shall be plainly and permanently marked with the following particulars:

(a) The pressure (in bar or kPa) at which it is set to discharge;

(b) The allowable tolerance at the discharge pressure for spring-loaded devices;

(c) The reference temperature corresponding to the rated pressure for frangible discs; and

(d) The rated flow capacity of the device in standard cubic metres of air per second (m^3/s).

When practicable, the following information shall also be shown:

(e) The manufacturer's name and relevant catalogue number of the device.

6.7.3.9.2 The rated flow capacity marked on the pressure-relief devices shall be determined according to ISO 4126-1:1991.

6.7.3.10 ***Connections to pressure-relief devices***

6.7.3.10.1 Connections to pressure-relief devices shall be of sufficient size to enable the required discharge to pass unrestricted to the safety device. No stop-valve shall be installed between the shell and the pressure-relief devices except when duplicate devices are provided for maintenance or other reasons and the stop-valves serving the devices actually in use are

locked open or the stop-valves are interlocked so that at least one of the duplicate devices is always operable and capable of meeting the requirements of 6.7.3.8. There shall be no obstruction in an opening leading to a vent or pressure-relief device which might restrict or cut-off the flow from the shell to that device. Vents from the pressure-relief devices, when used, shall deliver the relieved vapour or liquid to the atmosphere in conditions of minimum back-pressure on the relieving device.

6.7.3.11 ***Siting of pressure-relief devices***

6.7.3.11.1 Each pressure-relief device inlet shall be situated on top of the shell in a position as near the longitudinal and transverse centre of the shell as reasonably practicable. All pressure relief device inlets shall under maximum filling conditions be situated in the vapour space of the shell and the devices shall be so arranged as to ensure that the escaping vapour is discharged unrestrictedly. For flammable non-refrigerated liquefied gases, the escaping vapour shall be directed away from the shell in such a manner that it cannot impinge upon the shell. Protective devices which deflect the flow of vapour are permissible provided the required relief-device capacity is not reduced.

6.7.3.11.2 Arrangements shall be made to prevent access to the pressure-relief devices by unauthorized persons and to protect the devices from damage caused by the portable tank overturning.

6.7.3.12 ***Gauging devices***

6.7.3.12.1 Unless a portable tank is intended to be filled by weight it shall be equipped with one or more gauging devices. Glass level-gauges and gauges made of other fragile material, which are in direct communication with the contents of the shell shall not be used.

6.7.3.13 ***Portable tank supports, frameworks, lifting and tie-down attachments***

6.7.3.13.1 Portable tanks shall be designed and constructed with a support structure to provide a secure base during carriage. The forces specified in 6.7.3.2.9 and the safety factor specified in 6.7.3.2.10 shall be considered in this aspect of the design. Skids, frameworks, cradles or other similar structures are acceptable.

6.7.3.13.2 The combined stresses caused by portable tank mountings (e.g. cradles, frameworks, etc.) and portable tank lifting and tie-down attachments shall not cause excessive stress in any portion of the shell. Permanent lifting and tie-down attachments shall be fitted to all portable tanks. Preferably they shall be fitted to the portable tank supports but may be secured to reinforcing plates located on the shell at the points of support.

6.7.3.13.3 In the design of supports and frameworks the effects of environmental corrosion shall be taken into account.

6.7.3.13.4 Forklift pockets shall be capable of being closed off. The means of closing forklift pockets shall be a permanent part of the framework or permanently attached to the framework. Single compartment portable tanks with a length less than 3.65 m need not have closed off forklift pockets provided that:

(a) The shell and all the fittings are well protected from being hit by the forklift blades; and

(b) The distance between the centres of the forklift pockets is at least half of the maximum length of the portable tank.

6.7.3.13.5 When portable tanks are not protected during carriage, according to 4.2.2.3, the shells and service equipment shall be protected against damage to the shell and service equipment resulting from lateral or longitudinal impact or overturning. External fittings shall be protected so as to preclude the release of the shell contents upon impact or overturning of the portable tank on its fittings. Examples of protection include:

(a) Protection against lateral impact which may consist of longitudinal bars protecting the shell on both sides at the level of the median line;

(b) Protection of the portable tank against overturning which may consist of reinforcement rings or bars fixed across the frame;

(c) Protection against rear impact which may consist of a bumper or frame;

(d) Protection of the shell against damage from impact or overturning by use of an ISO frame in accordance with ISO 1496-3:1995.

6.7.3.14 ***Design approval***

6.7.3.14.1 The competent authority or its authorized body shall issue a design approval certificate for any new design of a portable tank. This certificate shall attest that a portable tank has been surveyed by that authority, is suitable for its intended purpose and meets the requirements of this Chapter and where appropriate the provisions for gases provided in portable tank instruction T50 in 4.2.5.2.6. When a series of portable tanks are manufactured without change in the design, the certificate shall be valid for the entire series. The certificate shall refer to the prototype test report, the gases allowed to be carried, the materials of construction of the shell and an approval number. The approval number shall consist of the distinguishing sign or mark of the State in whose territory the approval was granted, i.e. the distinguishing sign for use in international traffic, as prescribed by the Convention on Road Traffic, Vienna 1968, and a registration number. Any alternative arrangements according to 6.7.1.2 shall be indicated on the certificate. A design approval may serve for the approval of smaller portable tanks made of materials of the same kind and thickness, by the same fabrication techniques and with identical supports, equivalent closures and other appurtenances.

6.7.3.14.2 The prototype test report for the design approval shall include at least the following:

(a) The results of the applicable framework test specified in ISO 1496-3:1995;

(b) The results of the initial inspection and test in 6.7.3.15.3; and

(c) The results of the impact test in 6.7.3.15.1, when applicable.

6.7.3.15 ***Inspection and testing***

6.7.3.15.1 For portable tanks meeting the definition of container in the CSC, a prototype representing each design shall be subjected to an impact test. The prototype portable tank shall be shown to be capable of absorbing the forces resulting from an impact not less than 4 times (4 g) the MPGM of the fully loaded portable tank at a duration typical of the mechanical shocks experienced in rail transport. The following is a listing of standards describing methods acceptable for performing the impact test:

Association of American Railroads,
Manual of Standards and Recommended Practices,
Specifications for Acceptability of Tank Containers (AAR.600), 1992

National Standard of Canada, CAN/CGSB-43.147-2002, "Construction, Modification, Qualification, Maintenance, and Selection and Use of Means of Containment for the Handling, Offering for Transport or Transporting of Dangerous Goods by Rail", March 2002, published by the Canadian General Standards Board (CGSB).

Deutsche Bahn AG
DB Systemtechnik, Minden
Verifikation und Versuche, TZF 96.2
Portable tanks, longitudinal impact test

Société Nationale des Chemins de Fer Français
C.N.E.S.T. 002-1966.
Tank containers, longitudinal external stresses and dynamic impact tests

Spoornet, South Africa
Engineering Development Centre (EDC)
Testing of ISO Tank Containers
Method EDC/TES/023/000/1991-06

6.7.3.15.2 The shell and items of equipment of each portable tank shall be inspected and tested before being put into service for the first time (initial inspection and test) and thereafter at not more than five-year intervals (5 year periodic inspection and test) with an intermediate periodic inspection and test (2.5 year periodic inspection and test) midway between the 5 year periodic inspections and tests. The 2.5 year inspection and test may be performed within 3 months of the specified date. An exceptional inspection and test shall be performed regardless of the last periodic inspection and test when necessary according to 6.7.3.15.7.

6.7.3.15.3 The initial inspection and test of a portable tank shall include a check of the design characteristics, an internal and external examination of the portable tank and its fittings with due regard to the non-refrigerated liquefied gases to be carried, and a pressure test referring to the test pressures according to 6.7.3.3.2. The pressure test may be performed as a hydraulic test or by using another liquid or gas with the agreement of the competent authority or its authorized body. Before the portable tank is placed into service, a leakproofness test and a test of the satisfactory operation of all service equipment shall also be performed. When the shell and its fittings have been pressure-tested separately, they shall be subjected together after assembly to a leakproofness test. All welds subject to full stress level in the shell shall be inspected during the initial test by radiographic, ultrasonic, or another suitable non-destructive test method. This does not apply to the jacket.

6.7.3.15.4 The 5 year periodic inspection and test shall include an internal and external examination and, as a general rule, a hydraulic pressure test. Sheathing, thermal insulation and the like shall be removed only to the extent required for reliable appraisal of the condition of the portable tank. When the shell and equipment have been pressure-tested separately, they shall be subjected together after assembly to a leakproofness test.

6.7.3.15.5 The intermediate 2.5 year periodic inspection and test shall at least include an internal and external examination of the portable tank and its fittings with due regard to the non-refrigerated liquefied gases intended to be carried, a leakproofness test and a check of the satisfactory operation of all service equipment. Sheathing thermal insulation and the like shall be removed only to the extent required for reliable appraisal of the condition of the portable tank. For portable tanks intended for the carriage of a single non-refrigerated liquefied gas, the 2.5 year internal examination may be waived or substituted by other test methods or inspection procedures specified by the competent authority or its authorized body.

6.7.3.15.6 A portable tank may not be filled and offered for carriage after the date of expiry of the last 5 year or 2.5 year periodic inspection and test as required by 6.7.3.15.2. However a portable tank filled prior to the date of expiry of the last periodic inspection and test may be carried for a period not to exceed three months beyond the date of expiry of the last periodic test or inspection. In addition, a portable tank may be carried after the date of expiry of the last periodic test and inspection:

(a) After emptying but before cleaning, for purposes of performing the next required test or inspection prior to refilling; and

(b) Unless otherwise approved by the competent authority, for a period not to exceed six months beyond the date of expiry of the last periodic test or inspection, in order to allow the return of dangerous goods for proper disposal or recycling. Reference to this exemption shall be mentioned in the transport document.

6.7.3.15.7 The exceptional inspection and test is necessary when the portable tank shows evidence of damaged or corroded areas, or leakage, or other conditions that indicate a deficiency that could affect the integrity of the portable tank. The extent of the exceptional inspection and test shall depend on the amount of damage or deterioration of the portable tank. It shall include at least the 2.5 year inspection and test according to 6.7.3.15.5.

6.7.3.15.8 The internal and external examinations shall ensure that:

(a) The shell is inspected for pitting, corrosion, or abrasions, dents, distortions, defects in welds or any other conditions, including leakage, that might render the portable tank unsafe for carriage;

(b) The piping, valves, and gaskets are inspected for corroded areas, defects, or any other conditions, including leakage, that might render the portable tank unsafe for filling, discharge or carriage;

(c) Devices for tightening manhole covers are operative and there is no leakage at manhole covers or gaskets;

(d) Missing or loose bolts or nuts on any flanged connection or blank flange are replaced or tightened;

(e) All emergency devices and valves are free from corrosion, distortion and any damage or defect that could prevent their normal operation. Remote closure devices and self-closing stop-valves shall be operated to demonstrate proper operation;

(f) Required markings on the portable tank are legible and in accordance with the applicable requirements; and

(g) The framework, the supports and the arrangements for lifting the portable tank are in satisfactory condition.

6.7.3.15.9 The inspections and tests in 6.7.3.15.1, 6.7.3.15.3, 6.7.3.15.4, 6.7.3.15.5 and 6.7.3.15.7 shall be performed or witnessed by an expert approved by the competent authority or its authorized body. When the pressure test is a part of the inspection and test, the test pressure shall be the one indicated on the data plate of the portable tank. While under pressure, the portable tank shall be inspected for any leaks in the shell, piping or equipment.

6.7.3.15.10 In all cases when cutting, burning or welding operations on the shell have been effected, that work shall be to the approval of the competent authority or its authorized body taking into account the pressure vessel code used for the construction of the shell. A pressure test to the original test pressure shall be performed after the work is completed.

6.7.3.15.11 When evidence of any unsafe condition is discovered, the portable tank shall not be returned to service until it has been corrected and the pressure test is repeated and passed.

6.7.3.16 ***Marking***

6.7.3.16.1 Every portable tank shall be fitted with a corrosion resistant metal plate permanently attached to the portable tank in a conspicuous place readily accessible for inspection. When for reasons of portable tank arrangements, the plate cannot be permanently attached to the shell, the shell shall be marked with at least the information required by the pressure vessel code. As a minimum at least the following information shall be marked on the plate by stamping or by any other similar method:

Country of manufacture
U N Approval country Approval number For Alternative Arrangements (see 6.7.1.2) "AA"
Manufacturer's name or mark
Manufacturer's serial number
Authorized body for the design approval
Owner's registration number
Year of manufacture
Pressure vessel code to which the shell is designed
Test pressure _____bar/kPa (gauge pressure) [2]
MAWP_____ bar/kPa (gauge pressure) [2]
External design pressure [5] _____ bar/kPa (gauge pressure) [2]
Design temperature range_____ °C to_____°C
Design reference temperature_____ °C
Water capacity at 20°C _____litres
Initial pressure test date and witness identification
Shell material(s) and material standard reference(s)
Equivalent thickness in reference steel _____mm
Date and type of most recent periodic test(s)
Month_____ Year_____ Test pressure_____bar/kPa (gauge pressure) [2]
Stamp of expert who performed or witnessed the most recent test

6.7.3.16.2 The following information shall be marked either on the portable tank itself or on a metal plate firmly secured to the portable tank:

Name of the operator
Name of non-refrigerated liquefied gas(es) permitted for carriage
Maximum permissible load mass for each non-refrigerated liquefied gas permitted _____kg
Maximum permissible gross mass (MPGM)_____kg
Unladen (tare) mass_____kg

NOTE: *For the identification of the non-refrigerated liquefied gases being carried, see also Part 5.*

---

[2] *The unit used shall be marked.*

[5] *See 6.7.3.2.8.*

6.7.3.16.3 If a portable tank is designed and approved for handling in open seas, the words "OFFSHORE PORTABLE TANK" shall be marked on the identification plate.

6.7.4 Requirements for the design, construction, inspection and testing of portable tanks intended for the carriage of refrigerated liquefied gases

6.7.4.1 *Definitions*

For the purposes of this section:

Alternative arrangement means an approval granted by the competent authority for a portable tank or MEGC that has been designed, constructed or tested to technical requirements or testing methods other than those specified in this Chapter;

Portable tank means a thermally insulated multimodal tank having a capacity of more than 450 litres fitted with service equipment and structural equipment necessary for the carriage of refrigerated liquefied gases. The portable tank shall be capable of being filled and discharged without the removal of its structural equipment. It shall possess stabilizing members external to the tank, and shall be capable of being lifted when full. It shall be designed primarily to be loaded onto a transport vehicle or ship and shall be equipped with skids, mountings or accessories to facilitate mechanical handling. Tank-vehicles, tank-wagons, non-metallic tanks, intermediate bulk containers (IBCs), gas cylinders and large receptacles are not considered to fall within the definition for portable tanks;

Tank means a construction which normally consists of either :

(a) A jacket and one or more inner shells where the space between the shell(s) and the jacket is exhausted of air (vacuum insulation) and may incorporate a thermal insulation system; or

(b) A jacket and an inner shell with an intermediate layer of solid thermally insulating material (e.g. solid foam);

Shell means the part of the portable tank which retains the refrigerated liquefied gas intended for carriage, including openings and their closures, but does not include service equipment or external structural equipment;

Jacket means the outer insulation cover or cladding which may be part of the insulation system;

Service equipment means measuring instruments and filling, discharge, venting, safety, pressurizing, cooling and thermal insulation devices;

Structural equipment means the reinforcing, fastening, protective and stabilizing members external to the shell;

Maximum allowable working pressure (MAWP) means the maximum effective gauge pressure permissible at the top of the shell of a loaded portable tank in its operating position including the highest effective pressure during filling and discharge;

Test pressure means the maximum gauge pressure at the top of the shell during the pressure test;

Leakproofness test means a test using gas subjecting the shell and its service equipment, to an effective internal pressure not less than 90% of the MAWP;

Maximum permissible gross mass (MPGM) means the sum of the tare mass of the portable tank and the heaviest load authorized for carriage;

Holding time means the time that will elapse from the establishment of the initial filling condition until the pressure has risen due to heat influx to the lowest set pressure of the pressure limiting device(s);

Reference steel means a steel with a tensile strength of 370 N/mm^2 and an elongation at fracture of 27%;

*Minimum design temperature m*eans the temperature which is used for the design and construction of the shell not higher than the lowest (coldest) temperature (service temperature) of the contents during normal conditions of filling, discharge and carriage.

6.7.4.2 ***General design and construction requirements***

6.7.4.2.1 Shells shall be designed and constructed in accordance with the requirements of a pressure vessel code recognized by the competent authority. Shells and jackets shall be made of metallic materials suitable for forming. Jackets shall be made of steel. Non-metallic materials may be used for the attachments and supports between the shell and jacket, provided their material properties at the minimum design temperature are proven to be sufficient. The materials shall in principle conform to national or international material standards. For welded shells and jackets only materials whose weldability has been fully demonstrated shall be used. Welds shall be skilfully made and afford complete safety. When the manufacturing process or the materials make it necessary, the shell shall be suitably heat treated to guarantee adequate toughness in the weld and in the heat affected zones. In choosing the material, the minimum design temperature shall be taken into account with respect to risk of brittle fracture, to hydrogen embrittlement, to stress corrosion cracking and to resistance to impact. When fine grain steel is used, the guaranteed value of the yield strength shall be not more than 460 N/mm^2 and the guaranteed value of the upper limit of the tensile strength shall be not more than 725 N/mm^2 in accordance with the material specifications. Portable tank materials shall be suitable for the external environment in which they may be carried.

6.7.4.2.2 Any part of a portable tank, including fittings, gaskets and pipe-work, which can be expected normally to come into contact with the refrigerated liquefied gas carried shall be compatible with that refrigerated liquefied gas.

6.7.4.2.3 Contact between dissimilar metals which could result in damage by galvanic action shall be avoided.

6.7.4.2.4 The thermal insulation system shall include a complete covering of the shell(s) with effective insulating materials. External insulation shall be protected by a jacket so as to prevent the ingress of moisture and other damage under normal carriage conditions.

6.7.4.2.5 When a jacket is so closed as to be gas-tight, a device shall be provided to prevent any dangerous pressure from developing in the insulation space.

6.7.4.2.6 Portable tanks intended for the carriage of refrigerated liquefied gases having a boiling point below minus (-) 182 °C at atmospheric pressure shall not include materials which may react with oxygen or oxygen enriched atmospheres in a dangerous manner, when located in parts of the thermal insulation when there is a risk of contact with oxygen or with oxygen enriched fluid.

6.7.4.2.7 Insulating materials shall not deteriorate unduly in service.

6.7.4.2.8 A reference holding time shall be determined for each refrigerated liquefied gas intended for carriage in a portable tank.

6.7.4.2.8.1 The reference holding time shall be determined by a method recognized by the competent authority on the basis of the following:

(a) The effectiveness of the insulation system, determined in accordance with 6.7.4.2.8.2;

(b) The lowest set pressure of the pressure limiting device(s);

(c) The initial filling conditions;

(d) An assumed ambient temperature of 30 °C;

(e) The physical properties of the individual refrigerated liquefied gas intended to be carried.

6.7.4.2.8.2 The effectiveness of the insulation system (heat influx in watts) shall be determined by type testing the portable tank in accordance with a procedure recognized by the competent authority. This test shall consist of either:

(a) A constant pressure test (for example at atmospheric pressure) when the loss of refrigerated liquefied gas is measured over a period of time; or

(b) A closed system test when the rise in pressure in the shell is measured over a period of time.

When performing the constant pressure test, variations in atmospheric pressure shall be taken into account. When performing either tests corrections shall be made for any variation of the ambient temperature from the assumed ambient temperature reference value of 30 °C.

NOTE: *For the determination of the actual holding time before each journey, refer to 4.2.3.7.*

6.7.4.2.9 The jacket of a vacuum-insulated double-wall tank shall have either an external design pressure not less than 100 kPa (1 bar) (gauge pressure) calculated in accordance with a recognized technical code or a calculated critical collapsing pressure of not less than 200 kPa (2 bar) (gauge pressure). Internal and external reinforcements may be included in calculating the ability of the jacket to resist the external pressure.

6.7.4.2.10 Portable tanks shall be designed and constructed with supports to provide a secure base during carriage and with suitable lifting and tie-down attachments.

6.7.4.2.11 Portable tanks shall be designed to withstand, without loss of contents, at least the internal pressure due to the contents, and the static, dynamic and thermal loads during normal conditions of handling and carriage. The design shall demonstrate that the effects of fatigue, caused by repeated application of these loads through the expected life of the portable tank, have been taken into account.

6.7.4.2.12 Portable tanks and their fastenings under the maximum permissible load shall be capable of absorbing the following separately applied static forces:

(a) In the direction of travel: twice the MPGM multiplied by the acceleration due to gravity (g) [1];

(b) Horizontally at right angles to the direction of travel: the MPGM (when the direction of travel is not clearly determined, the forces shall be equal to twice the MPGM) multiplied by the acceleration due to gravity (g) [1];

(c) Vertically upwards: the MPGM multiplied by the acceleration due to gravity (g) [1]; and

(d) Vertically downwards: twice the MPGM (total loading including the effect of gravity) multiplied by the acceleration due to gravity (g) [1].

6.7.4.2.13 Under each of the forces in 6.7.4.2.12, the safety factor to be observed shall be as follows:

(a) For materials having a clearly defined yield point, a safety factor of 1.5 in relation to the guaranteed yield strength; and

(b) For materials with no clearly defined yield point, a safety factor of 1.5 in relation to the guaranteed 0.2% proof strength or, in case of austenitic steels, the 1% proof strength.

6.7.4.2.14 The values of yield strength or proof strength shall be the values according to national or international material standards. When austenitic steels are used, the specified minimum values according to the material standards may be increased by up to 15% when greater values are attested in the material inspection certificate. When no material standard exists for the metal in question, or when non-metallic materials are used the values of yield strength or proof strength shall be approved by the competent authority.

6.7.4.2.15 Portable tanks intended for the carriage of flammable refrigerated liquefied gases shall be capable of being electrically earthed.

6.7.4.3 ***Design criteria***

6.7.4.3.1 Shells shall be of a circular cross section.

6.7.4.3.2 Shells shall be designed and constructed to withstand a test pressure not less than 1.3 times the MAWP. For shells with vacuum insulation the test pressure shall not be less than 1.3 times the sum of the MAWP and 100 kPa (1 bar). In no case shall the test pressure be less than 300 kPa (3 bar) (gauge pressure). Attention is drawn to the minimum shell thickness requirements, specified in 6.7.4.4.2 to 6.7.4.4.7.

6.7.4.3.3 For metals exhibiting a clearly defined yield point or characterized by a guaranteed proof strength (0.2% proof strength, generally, or 1% proof strength for austenitic steels) the primary membrane stress σ (sigma) in the shell shall not exceed 0.75 Re or 0.50 Rm, whichever is lower, at the test pressure, where:

Re = yield strength in N/mm^2, or 0.2% proof strength or, for austenitic steels, 1% proof strength;

Rm = minimum tensile strength in N/mm^2.

6.7.4.3.3.1 The values of Re and Rm to be used shall be the specified minimum values according to national or international material standards. When austenitic steels are used, the specified minimum values for Re and Rm according to the material standards may be increased by up

[1] *For calculation purposes g = 9.81 m/s^2.*

to 15% when greater values are attested in the material inspection certificate. When no material standard exists for the metal in question, the values of Re and Rm used shall be approved by the competent authority or its authorized body.

6.7.4.3.3.2 Steels which have a Re/Rm ratio of more than 0.85 are not allowed for the construction of welded shells. The values of Re and Rm to be used in determining this ratio shall be the values specified in the material inspection certificate.

6.7.4.3.3.3 Steels used in the construction of shells shall have an elongation at fracture, in %, of not less than 10 000/Rm with an absolute minimum of 16% for fine grain steels and 20% for other steels. Aluminium and aluminium alloys used in the construction of shells shall have an elongation at fracture, in %, of not less than 10 000/6Rm with an absolute minimum of 12%.

6.7.4.3.3.4 For the purpose of determining actual values for materials, it shall be noted that for sheet metal, the axis of the tensile test specimen shall be at right angles (transversely) to the direction of rolling. The permanent elongation at fracture shall be measured on test specimens of rectangular cross sections in accordance with ISO 6892:1988 using a 50 mm gauge length.

6.7.4.4 ***Minimum shell thickness***

6.7.4.4.1 The minimum shell thickness shall be the greater thickness based on:

(a) The minimum thickness determined in accordance with the requirements in 6.7.4.4.2 to 6.7.4.4.7; or

(b) The minimum thickness determined in accordance with the recognized pressure vessel code including the requirements in 6.7.4.3.

6.7.4.4.2 Shells of not more than 1.80 m in diameter shall be not less than 5 mm thick in the reference steel or of equivalent thickness in the metal to be used. Shells of more than 1.80 m in diameter shall be not less than 6 mm thick in the reference steel or of equivalent thickness in the metal to be used.

6.7.4.4.3 Shells of vacuum-insulated tanks of not more than 1.80 m in diameter shall be not less than 3 mm thick in the reference steel or of equivalent thickness in the metal to be used. Such shells of more than 1.80 m in diameter shall be not less than 4 mm thick in the reference steel or of equivalent thickness in the metal to be used.

6.7.4.4.4 For vacuum-insulated tanks, the aggregate thickness of the jacket and the shell shall correspond to the minimum thickness prescribed in 6.7.4.4.2, the thickness of the shell itself being not less than the minimum thickness prescribed in 6.7.4.4.3.

6.7.4.4.5 Shells shall be not less than 3 mm thick regardless of the material of construction.

6.7.4.4.6 The equivalent thickness of a metal other than the thickness prescribed for the reference steel in 6.7.4.4.2 and 6.7.4.4.3 shall be determined using the following formula:

$$e_1 = \frac{21.4 e_o}{\sqrt[3]{Rm_1 \times A_1}}$$

where:

e_1 = required equivalent thickness (in mm) of the metal to be used;

e_0 = minimum thickness (in mm) of the reference steel specified in 6.7.4.4.2 and 6.7.4.4.3;

Rm_1 = guaranteed minimum tensile strength (in N/mm^2) of the metal to be used (see 6.7.4.3.3);

A_1 = guaranteed minimum elongation at fracture (in %) of the metal to be used according to national or international standards.

6.7.4.4.7 In no case shall the wall thickness be less than that prescribed in 6.7.4.4.1 to 6.7.4.4.5. All parts of the shell shall have a minimum thickness as determined by 6.7.4.4.1 to 6.7.4.4.6. This thickness shall be exclusive of any corrosion allowance.

6.7.4.4.8 There shall be no sudden change of plate thickness at the attachment of the ends (heads) to the cylindrical portion of the shell.

6.7.4.5 ***Service equipment***

6.7.4.5.1 Service equipment shall be so arranged as to be protected against the risk of being wrenched off or damaged during handling and carriage. When the connection between the frame and the tank or the jacket and the shell allows relative movement, the equipment shall be so fastened as to permit such movement without risk of damage to working parts. The external discharge fittings (pipe sockets, shut-off devices), the stop-valve and its seating shall be protected against the danger of being wrenched off by external forces (for example using shear sections). The filling and discharge devices (including flanges or threaded plugs) and any protective caps shall be capable of being secured against unintended opening.

6.7.4.5.2 Each filling and discharge opening in portable tanks used for the carriage of flammable refrigerated liquefied gases shall be fitted with at least three mutually independent shut-off devices in series, the first being a stop-valve situated as close as reasonably practicable to the jacket, the second being a stop-valve and the third being a blank flange or equivalent device. The shut-off device closest to the jacket shall be a quick closing device, which closes automatically in the event of unintended movement of the portable tank during filling or discharge or fire engulfment. This device shall also be possible to operate by remote control.

6.7.4.5.3 Each filling and discharge opening in portable tanks used for the carriage of non-flammable refrigerated liquefied gases shall be fitted with at least two mutually independent shut-off devices in series, the first being a stop-valve situated as close as reasonably practicable to the jacket, the second a blank flange or equivalent device.

6.7.4.5.4 For sections of piping which can be closed at both ends and where liquid product can be trapped, a method of automatic pressure relief shall be provided to prevent excess pressure build-up within the piping.

6.7.4.5.5 Vacuum insulated tanks need not have an opening for inspection.

6.7.4.5.6 External fittings shall be grouped together so far as reasonably practicable.

6.7.4.5.7 Each connection on a portable tank shall be clearly marked to indicate its function.

6.7.4.5.8 Each stop-valve or other means of closure shall be designed and constructed to a rated pressure not less than the MAWP of the shell taking into account the temperature expected

during carriage. All stop-valves with a screwed spindle shall be closed by a clockwise motion of the handwheel. In the case of other stop-valves the position (open and closed) and direction of closure shall be clearly indicated. All stop-valves shall be designed to prevent unintentional opening.

6.7.4.5.9 When pressure-building units are used, the liquid and vapour connections to that unit shall be provided with a valve as close to the jacket as reasonably practicable to prevent the loss of contents in case of damage to the pressure-building unit.

6.7.4.5.10 Piping shall be designed, constructed and installed so as to avoid the risk of damage due to thermal expansion and contraction, mechanical shock and vibration. All piping shall be of a suitable material. To prevent leakage due to fire, only steel piping and welded joints shall be used between the jacket and the connection to the first closure of any outlet. The method of attaching the closure to this connection shall be to the satisfaction of the competent authority or its authorized body. Elsewhere pipe joints shall be welded when necessary.

6.7.4.5.11 Joints in copper tubing shall be brazed or have an equally strong metal union. The melting point of brazing materials shall be no lower than 525 °C. The joints shall not decrease the strength of the tubing as may happen when cutting threads.

6.7.4.5.12 The materials of construction of valves and accessories shall have satisfactory properties at the lowest operating temperature of the portable tank.

6.7.4.5.13 The burst pressure of all piping and pipe fittings shall be not less than the highest of four times the MAWP of the shell or four times the pressure to which it may be subjected in service by the action of a pump or other device (except pressure-relief devices).

6.7.4.6 ***Pressure-relief devices***

6.7.4.6.1 Every shell shall be provided with not less than two independent spring-loaded pressure-relief devices. The pressure-relief devices shall open automatically at a pressure not less than the MAWP and be fully open a pressure equal to 110% of the MAWP. These devices shall, after discharge, close at a pressure not lower than 10% below the pressure at which discharge starts and shall remain closed at all lower pressures. The pressure-relief devices shall be of the type that will resist dynamic forces including surge.

6.7.4.6.2 Shells for non-flammable refrigerated liquefied gases and hydrogen may in addition have frangible discs in parallel with the spring-loaded devices as specified in 6.7.4.7.2 and 6.7.4.7.3.

6.7.4.6.3 Pressure-relief devices shall be designed to prevent the entry of foreign matter, the leakage of gas and the development of any dangerous excess pressure.

6.7.4.6.4 Pressure-relief devices shall be approved by the competent authority or its authorized body.

6.7.4.7 ***Capacity and setting of pressure-relief devices***

6.7.4.7.1 In the case of the loss of vacuum in a vacuum-insulated tank or of loss of 20% of the insulation of a tank insulated with solid materials, the combined capacity of all pressure-relief devices installed shall be sufficient so that the pressure (including accumulation) inside the shell does not exceed 120% of the MAWP.

6.7.4.7.2 For non-flammable refrigerated liquefied gases (except oxygen) and hydrogen, this capacity may be achieved by the use of frangible discs in parallel with the required safety-relief devices. Frangible discs shall rupture at nominal pressure equal to the test pressure of the shell.

6.7.4.7.3 Under the circumstances described in 6.7.4.7.1 and 6.7.4.7.2 together with complete fire engulfment the combined capacity of all pressure-relief devices installed shall be sufficient to limit the pressure in the shell to the test pressure.

6.7.4.7.4 The required capacity of the relief devices shall be calculated in accordance with a well-established technical code recognized by the competent authority [6].

6.7.4.8 ***Marking of pressure-relief devices***

6.7.4.8.1 Every pressure-relief device shall be plainly and permanently marked with the following particulars:

(a) The pressure (in bar or kPa) at which it is set to discharge;

(b) The allowable tolerance at the discharge pressure for spring-loaded devices;

(c) The reference temperature corresponding to the rated pressure for frangible discs; and

(d) The rated flow capacity of the device in standard cubic meters of air per second (m^3/s).

When practicable, the following information shall also be shown:

(e) The manufacturer's name and relevant catalogue number of the device.

6.7.4.8.2 The rated flow capacity marked on the pressure-relief devices shall be determined according to ISO 4126-1:1991.

6.7.4.9 ***Connections to pressure-relief devices***

6.7.4.9.1 Connections to pressure-relief devices shall be of sufficient size to enable the required discharge to pass unrestricted to the safety device. No stop-valve shall be installed between the shell and the pressure-relief devices except when duplicate devices are provided for maintenance or other reasons and the stop-valves serving the devices actually in use are locked open or the stop-valves are interlocked so that the requirements of 6.7.4.7 are always fulfilled. There shall be no obstruction in an opening leading to a vent or pressure-relief device which might restrict or cut-off the flow from the shell to that device. Pipework to vent the vapour or liquid from the outlet of the pressure-relief devices, when used, shall deliver the relieved vapour or liquid to the atmosphere in conditions of minimum back-pressure on the relieving device.

6.7.4.10 ***Siting of pressure-relief devices***

6.7.4.10.1 Each pressure-relief device inlet shall be situated on top of the shell in a position as near the longitudinal and transverse centre of the shell as reasonably practicable. All pressure-relief device inlets shall under maximum filling conditions be situated in the vapour space of the shell and the devices shall be so arranged as to ensure that the escaping vapour is discharged unrestrictedly. For refrigerated liquefied gases, the escaping vapour shall be directed away from the tank and in such a manner that it cannot impinge upon the tank. Protective devices which deflect the flow of vapour are permissible provided the required relief-device capacity is not reduced.

6.7.4.10.2 Arrangements shall be made to prevent access to the devices by unauthorized persons and to protect the devices from damage caused by the portable tank overturning.

---

[6] *See for example CGA Pamphlet S-1.2-1995.*

6.7.4.11 ***Gauging devices***

6.7.4.11.1 Unless a portable tank is intended to be filled by weight, it shall be equipped with one or more gauging devices. Glass level-gauges and gauges made of other fragile material, which are in direct communication with the contents of the shell shall not be used.

6.7.4.11.2 A connection for a vacuum gauge shall be provided in the jacket of a vacuum-insulated portable tank.

6.7.4.12 ***Portable tank supports, frameworks, lifting and tie-down attachments***

6.7.4.12.1 Portable tanks shall be designed and constructed with a support structure to provide a secure base during carriage. The forces specified in 6.7.4.2.12 and the safety factor specified in 6.7.4.2.13 shall be considered in this aspect of the design. Skids, frameworks, cradles or other similar structures are acceptable.

6.7.4.12.2 The combined stresses caused by portable tank mountings (e.g. cradles, frameworks, etc.) and portable tank lifting and tie-down attachments shall not cause excessive stress in any portion of the tank. Permanent lifting and tie-down attachments shall be fitted to all portable tanks. Preferably they shall be fitted to the portable tank supports but may be secured to reinforcing plates located on the tank at the points of support.

6.7.4.12.3 In the design of supports and frameworks the effects of environmental corrosion shall be taken into account.

6.7.4.12.4 Forklift pockets shall be capable of being closed off. The means of closing forklift pockets shall be a permanent part of the framework or permanently attached to the framework. Single compartment portable tanks with a length less than 3.65 m need not have closed off forklift pockets provided that:

(a) The tank and all the fittings are well protected from being hit by the forklift blades; and

(b) The distance between the centres of the forklift pockets is at least half of the maximum length of the portable tank.

6.7.4.12.5 When portable tanks are not protected during carriage, according to 4.2.3.3, the shells and service equipment shall be protected against damage to the shell and service equipment resulting from lateral or longitudinal impact or overturning. External fittings shall be protected so as to preclude the release of the shell contents upon impact or overturning of the portable tank on its fittings. Examples of protection include:

(a) Protection against lateral impact which may consist of longitudinal bars protecting the shell on both sides at the level of the median line;

(b) Protection of the portable tank against overturning which may consist of reinforcement rings or bars fixed across the frame;

(c) Protection against rear impact which may consist of a bumper or frame;

(d) Protection of the shell against damage from impact or overturning by use of an ISO frame in accordance with ISO 1496-3:1995;

(e) Protection of the portable tank from impact or overturning by a vacuum insulation jacket.

6.7.4.13 ***Design approval***

6.7.4.13.1 The competent authority or its authorized body shall issue a design approval certificate for any new design of a portable tank. This certificate shall attest that a portable tank has been surveyed by that authority, is suitable for its intended purpose and meets the requirements of this Chapter. When a series of portable tanks are manufactured without change in the design, the certificate shall be valid for the entire series. The certificate shall refer to the prototype test report, the refrigerated liquefied gases allowed to be carried, the materials of construction of the shell and jacket and an approval number. The approval number shall consist of the distinguishing sign or mark of the State in whose territory the approval was granted, i.e. the distinguishing sign for use in international traffic, as prescribed by the Convention on Road Traffic, Vienna 1968, and a registration number. Any alternative arrangements according to 6.7.1.2 shall be indicated on the certificate. A design approval may serve for the approval of smaller portable tanks made of materials of the same kind and thickness, by the same fabrication techniques and with identical supports, equivalent closures and other appurtenances.

6.7.4.13.2 The prototype test report for the design approval shall include at least the following:

(a) The results of the applicable frame-work test specified in ISO 1496-3:1995;

(b) The results of the initial inspection and test in 6.7.4.14.3; and

(c) The results of the impact test in 6.7.4.14.1, when applicable.

6.7.4.14 ***Inspection and testing***

6.7.4.14.1 For portable tanks meeting the definition of container in the CSC, a prototype representing each design shall be subjected to an impact test. The prototype portable tank shall be shown to be capable of absorbing the forces resulting from an impact not less than 4 times (4 g) the MPGM of the fully loaded portable tank at a duration typical of the mechanical shocks experienced in rail transport. The following is a listing of standards describing methods acceptable for performing the impact test:

Association of American Railroads,
Manual of Standards and Recommended Practices,
Specifications for Acceptability of Tank Containers (AAR.600), 1992

National Standard of Canada, CAN/CGSB-43.147-2002, "Construction, Modification, Qualification, Maintenance, and Selection and Use of Means of Containment for the Handling, Offering for Transport or Transporting of Dangerous Goods by Rail", March 2002, published by the Canadian General Standards Board (CGSB).

Deutsche Bahn AG
DB Systemtechnik, Minden
Verifikation und Versuche, TZF 96.2
Portable tanks, longitudinal impact test

Société Nationale des Chemins de Fer Français
C.N.E.S.T. 002-1966.
Tank containers, longitudinal external stresses and dynamic impact tests

Spoornet, South Africa
Engineering Development Centre (EDC)
Testing of ISO Tank Containers
Method EDC/EST/023/000/1991-06

6.7.4.14.2 The tank and items of equipment of each portable tank shall be inspected and tested before being put into service for the first time (initial inspection and test) and thereafter at not more than five-year intervals (5 year periodic inspection and test) with an intermediate periodic inspection and test (2.5 year periodic inspection and test) midway between the 5 year periodic inspections and tests. The 2.5 year inspection and test may be performed within 3 months of the specified date. An exceptional inspection and test shall be performed regardless of the last periodic inspection and test when necessary according to 6.7.4.14.7.

6.7.4.14.3 The initial inspection and test of a portable tank shall include a check of the design characteristics, an internal and external examination of the portable tank shell and its fittings with due regard to the refrigerated liquefied gases to be carried, and a pressure test referring to the test pressures according to 6.7.4.3.2. The pressure test may be performed as a hydraulic test or by using another liquid or gas with the agreement of the competent authority or its authorized body. Before the portable tank is placed into service, a leakproofness test and a check of the satisfactory operation of all service equipment shall also be performed. When the shell and its fittings have been pressure-tested separately, they shall be subjected together after assembly to a leakproofness test. All welds subject to full stress level shall be inspected during the initial test by radiographic, ultrasonic, or another suitable non-destructive test method. This does not apply to the jacket.

6.7.4.14.4 The 5 and 2.5 year periodic inspection and test shall include an external examination of the portable tank and its fittings with due regard to the refrigerated liquefied gases carried, a leakproofness test, a check of the satisfactory operation of all service equipment and a vacuum reading, when applicable. In the case of non-vacuum insulated tanks, the jacket and insulation shall be removed during a 2.5 year and a 5 year periodic inspection but only to the extent necessary for a reliable appraisal.

6.7.4.14.5 In addition, at the 5 year periodic inspection and test of non-vacuum insulated tanks the jacket and insulation shall be removed, but only to the extent necessary for a reliable appraisal.

6.7.4.14.6 A portable tank may not be filled and offered for carriage after the date of expiry of the last 5 year or 2.5 year periodic inspection and test as required by 6.7.4.14.2. However a portable tank filled prior to the date of expiry of the last periodic inspection and test may be carried for a period not to exceed three months beyond the date of expiry of the last periodic test or inspection. In addition, a portable tank may be carried after the date of expiry of the last periodic test and inspection:

(a) After emptying but before cleaning, for purposes of performing the next required test or inspection prior to refilling; and

(b) Unless otherwise approved by the competent authority, for a period not to exceed six months beyond the date of expiry of the last periodic test or inspection, in order to allow the return of dangerous goods for proper disposal or recycling. Reference to this exemption shall be mentioned in the transport document.

6.7.4.14.7 The exceptional inspection and test is necessary when the portable tank shows evidence of damaged or corroded areas, leakage, or any other conditions that indicate a deficiency that could affect the integrity of the portable tank. The extent of the exceptional inspection and test shall depend on the amount of damage or deterioration of the portable tank. It shall include at least the 2.5 year inspection and test according to 6.7.4.14.4.

6.7.4.14.8 The internal examination during the initial inspection and test shall ensure that the shell is inspected for pitting, corrosion, or abrasions, dents, distortions, defects in welds or any other conditions, that might render the portable tank unsafe for carriage.

6.7.4.14.9 The external examination shall ensure that:

(a) The external piping, valves, pressurizing/cooling systems when applicable and gaskets are inspected for corroded areas, defects, or any other conditions, including leakage, that might render the portable tank unsafe for filling, discharge or carriage;

(b) There is no leakage at any manhole covers or gaskets;

(c) Missing or loose bolts or nuts on any flanged connection or blank flange are replaced or tightened;

(d) All emergency devices and valves are free from corrosion, distortion and any damage or defect that could prevent their normal operation. Remote closure devices and self-closing stop-valves shall be operated to demonstrate proper operation;

(e) Required markings on the portable tank are legible and in accordance with the applicable requirements; and

(f) The framework, the supports and the arrangements for lifting the portable tank are in satisfactory condition.

6.7.4.14.10 The inspections and tests in 6.7.4.14.1, 6.7.4.14.3, 6.7.4.14.4, 6.7.4.14.5 and 6.7.4.14.7 shall be performed or witnessed by an expert approved by the competent authority or its authorized body. When the pressure test is a part of the inspection and test, the test pressure shall be the one indicated on the data plate of the portable tank. While under pressure, the portable tank shall be inspected for any leaks in the shell, piping or equipment.

6.7.4.14.11 In all cases when cutting, burning or welding operations on the shell of a portable tank have been effected, that work shall be to the approval of the competent authority or its authorized body taking into account the pressure vessel code used for the construction of the shell. A pressure test to the original test pressure shall be performed after the work is completed.

6.7.4.14.12 When evidence of any unsafe condition is discovered, the portable tank shall not be returned to service until it has been corrected and the test is repeated and passed.

6.7.4.15 ***Marking***

6.7.4.15.1 Every portable tank shall be fitted with a corrosion resistant metal plate permanently attached to the portable tank in a conspicuous place readily accessible for inspection. When for reasons of portable tank arrangements, the plate cannot be permanently attached to the shell, the shell shall be marked with at least the information required by the pressure vessel code. As a minimum at least the following information shall be marked on the plate by stamping or by any other similar method:

Country of manufacture
U N Approval country Approval number For Alternative Arrangements (see 6.7.1.2) "AA"
Manufacturer's name or mark
Manufacturer's serial number
Authorized body for the design approval
Owner's registration number
Year of manufacture
Pressure vessel code to which the tank is designed
Test pressure _____bar/kPa (gauge pressure) [2]

[2] *The unit used shall be marked.*

MAWP_____ bar/kPa (gauge pressure) [2]
Minimum design temperature _____°C
Water capacity at 20 °C _____litres
Initial pressure test date and witness identification
Shell material(s) and material standard reference(s)
Equivalent thickness in reference steel _____mm
Date and type of most recent periodic test(s)
Month_____ Year_____ Test pressure_____bar/kPa (gauge pressure)[2]
Stamp of expert who performed or witnessed the most recent test
The name, in full, of the gas(es) for whose carriage the portable tank is approved
Either "thermally insulated" or "vacuum insulated"_____
Effectiveness of the insulation system (heat influx)_____Watts (W)
Reference holding time_____days (or hours) and initial pressure_____bar/kPa (gauge pressure) [2] and degree of filling_____ in kg for each refrigerated liquefied gas permitted for carriage.

6.7.4.15.2 The following particulars shall be durably marked either on the portable tank itself or on a metal plate firmly secured to the portable tank.

Name of the owner and the operator
Name of the refrigerated liquefied gas being carried (and minimum mean bulk temperature)
Maximum permissible gross mass (MPGM)_____kg
Unladen (tare) mass_____kg
Actual holding time for gas being carried _____days (or hours)

***NOTE**: For the identification of the refrigerated liquefied gas(es) being carried, see also Part 5.*

6.7.4.15.3 If a portable tank is designed and approved for handling in open seas, the words "OFFSHORE PORTABLE TANK" shall be marked on the identification plate.

6.7.5 Requirements for the design, construction, inspection and testing of UN multiple-element gas containers (MEGCs) intended for the carriage of non-refrigerated gases

6.7.5.1 ***Definitions***

For the purposes of this section:

Alternative arrangement means an approval granted by the competent authority for a portable tank or MEGC that has been designed, constructed or tested to technical requirements or testing methods other than those specified in this Chapter;

*Element*s are cylinders, tubes or bundles of cylinders;

Leakproofness test means a test using gas subjecting the elements and the service equipment of the MEGC to an effective internal pressure of not less than 20% of the test pressure;

Manifold means an assembly of piping and valves connecting the filling and/or discharge openings of the elements;

Maximum permissible gross mass (MPGM) means the sum of the tare mass of the MEGC and the heaviest load authorized for carriage;

[2] *The unit used shall be marked.*

UN Multiple-element gas containers (MEGCs) are multimodal assemblies of cylinders, tubes and bundles of cylinders which are interconnected by a manifold and which are assembled within a framework. The MEGC includes service equipment and structural equipment necessary for the carriage of gases;

Service equipment means measuring instruments and filling, discharge, venting and safety devices;

Structural equipment means the reinforcing, fastening, protective and stabilizing members external to the elements.

6.7.5.2 ***General design and construction requirements***

6.7.5.2.1 The MEGC shall be capable of being filled and discharged without the removal of its structural equipment. It shall possess stabilizing members external to the elements to provide structural integrity for handling and carriage. MEGCs shall be designed and constructed with supports to provide a secure base during carriage and with lifting and tie-down attachments which are adequate for lifting the MEGC including when filled to its maximum permissible gross mass. The MEGC shall be designed to be loaded onto a transport unit or ship and shall be equipped with skids, mountings or accessories to facilitate mechanical handling.

6.7.5.2.2 MEGCs shall be designed, manufactured and equipped in such a way as to withstand all conditions to which they will be subjected during normal conditions of handling and carriage. The design shall take into account the effects of dynamic loading and fatigue.

6.7.5.2.3 Elements of an MEGC shall be made of seamless steel and be constructed and tested according to 6.2.5. All of the elements in an MEGC shall be of the same design type.

6.7.5.2.4 Elements of MEGCs, fittings and pipework shall be:

(a) compatible with the substances intended to be carried (see ISO 11114-1:1997 and ISO 11114-2:2000); or

(b) properly passivated or neutralized by chemical reaction.

6.7.5.2.5 Contact between dissimilar metals which could result in damage by galvanic action shall be avoided.

6.7.5.2.6 The materials of the MEGC, including any devices, gaskets, and accessories, shall not adversely affect the gas(es) intended for carriage in the MEGC.

6.7.5.2.7 MEGCs shall be designed to withstand, without loss of contents, at least the internal pressure due to the contents, and the static, dynamic and thermal loads during normal conditions of handling and carriage. The design shall demonstrate that the effects of fatigue, caused by repeated application of these loads through the expected life of the multiple-element gas container, have been taken into account.

6.7.5.2.8 MEGCs and their fastenings shall, under the maximum permissible load, be capable of withstanding the following separately applied static forces:

(a) in the direction of travel: twice the MPGM multiplied by the acceleration due to gravity (g)[1];

[1] *For calculation purposes g = 9.81 m/s^2.*

(b) horizontally at right angles to the direction of travel: the MPGM (when the direction of travel is not clearly determined, the forces shall be equal to twice the MPGM) multiplied by the acceleration due to gravity (g)[1];

(c) vertically upwards: the MPGM multiplied by the acceleration due to gravity (g)[1]; and

(d) vertically downwards: twice the MPGM (total loading including the effect of gravity) multiplied by the acceleration due to gravity (g)[1].

6.7.5.2.9 Under the forces defined in 6.7.5.2.8, the stress at the most severely stressed point of the elements shall not exceed the values given in either the relevant standards of 6.2.5.2 or, if the elements are not designed, constructed and tested according to those standards, in the technical code or standard recognised or approved by the competent authority of the country of use (see 6.2.3).

6.7.5.2.10 Under each of the forces in 6.7.5.2.8, the safety factor for the framework and fastenings to be observed shall be as follows:

(a) for steels having a clearly defined yield point, a safety factor of 1.5 in relation to the guaranteed yield strength; or

(b) for steels with no clearly defined yield point, a safety factor of 1.5 in relation to the guaranteed 0.2% proof strength and, for austenitic steels, the 1% proof strength.

6.7.5.2.11 MEGCs intended for the carriage of flammable gases shall be capable of being electrically earthed.

6.7.5.2.12 The elements shall be secured in a manner that prevents undesired movement in relation to the structure and the concentration of harmful localized stresses.

6.7.5.3 ***Service equipment***

6.7.5.3.1 Service equipment shall be configured or designed to prevent damage that could result in the release of the pressure receptacle contents during normal conditions of handling and carriage. When the connection between the frame and the elements allows relative movement between the sub-assemblies, the equipment shall be so fastened as to permit such movement without damage to working parts. The manifolds, the discharge fittings (pipe sockets, shut-off devices), and the stop-valves shall be protected from being wrenched off by external forces. Manifold piping leading to shut-off valves shall be sufficiently flexible to protect the valves and the piping from shearing, or releasing the pressure receptacle contents. The filling and discharge devices (including flanges or threaded plugs) and any protective caps shall be capable of being secured against unintended opening.

6.7.5.3.2 Each element intended for the carriage of toxic gases (gases of groups T, TF, TC, TO, TFC and TOC) shall be fitted with a valve. The manifold for liquefied toxic gases (gases of classification codes 2T, 2TF, 2TC, 2TO, 2TFC and 2TOC) shall be so designed that the elements can be filled separately and be kept isolated by a valve capable of being sealed. For the carriage of flammable gases (gases of group F), the elements shall be isolated by a valve into assemblies of not more than 3 000 litres.

6.7.5.3.3 For filling and discharge openings of the MEGC, two valves in series shall be placed in an accessible position on each discharge and filling pipe. One of the valves may be a non-return valve. The filling and discharge devices may be fitted to a manifold. For sections of piping which can be closed at both ends and where a liquid product can be trapped, a pressure-relief

[1] *For calculation purposes g = 9.81 m/s^2.*

valve shall be provided to prevent excessive pressure build-up. The main isolation valves on an MEGC shall be clearly marked to indicate their directions of closure. Each stop-valve or other means of closure shall be designed and constructed to withstand a pressure equal to or greater than 1.5 times the test pressure of the MEGC. All stop-valves with screwed spindles shall close by a clockwise motion of the handwheel. For other stop-valves, the position (open and closed) and direction of closure shall be clearly indicated. All stop-valves shall be designed and positioned to prevent unintentional opening. Ductile metals shall be used in the construction of valves or accessories.

6.7.5.3.4 Piping shall be designed, constructed and installed so as to avoid damage due to expansion and contraction, mechanical shock and vibration. Joints in tubing shall be brazed or have an equally strong metal union. The melting point of brazing materials shall be no lower than 525 °C. The rated pressure of the service equipment and of the manifold shall be not less than two thirds of the test pressure of the elements.

6.7.5.4 ***Pressure-relief devices***

6.7.5.4.1 One or more pressure relief devices shall be fitted on MEGCs used for the carriage of UN No. 1013 carbon dioxide and UN No. 1070 nitrous oxide. MEGCs for other gases shall be fitted with pressure relief devices as specified by the competent authority for the country of use.

6.7.5.4.2 When pressure relief devices are fitted, every element or group of elements of an MEGC that can be isolated shall then be fitted with one or more pressure relief devices. Pressure relief devices shall be of a type that will resist dynamic forces including liquid surge and shall be designed to prevent the entry of foreign matter, the leakage of gas and the development of any dangerous excess pressure.

6.7.5.4.3 MEGCs used for the carriage of certain non-refrigerated gases identified in portable tank instruction T50 in 4.2.5.2.6 may have a pressure-relief device as required by the competent authority of the country of use. Unless an MEGC in dedicated service is fitted with an approved pressure relief device constructed of materials compatible with the gas carried, such a device shall comprise a frangible disc preceding a spring-loaded device. The space between the frangible disc and the spring-loaded device may be equipped with a pressure gauge or a suitable telltale indicator. This arrangement permits the detection of disc rupture, pinholing or leakage which could cause a malfunction of the pressure relief device. The frangible disc shall rupture at a nominal pressure 10% above the start-to-discharge pressure of the spring-loaded device.

6.7.5.4.4 In the case of multi-purpose MEGCs used for the carriage of low-pressure liquefied gases, the pressure-relief devices shall open at a pressure as specified in 6.7.3.7.1 for the gas having the highest maximum allowable working pressure of the gases allowed to be carried in the MEGC.

6.7.5.5 ***Capacity of pressure relief devices***

6.7.5.5.1 The combined delivery capacity of the pressure relief devices when fitted shall be sufficient that, in the event of total fire engulfment of the MEGC, the pressure (including accumulation) inside the elements does not exceed 120% of the set pressure of the pressure relief device. The formula provided in CGA S-1.2-1995 shall be used to determine the minimum total flow capacity for the system of pressure relief devices. CGA S-1.1-1994 may be used to determine the relief capacity of individual elements. Spring-loaded pressure relief devices may be used to achieve the full relief capacity prescribed in the case of low pressure liquefied gases. In the case of multi-purpose MEGCs, the combined delivery capacity of the pressure-relief devices shall be taken for the gas which requires the highest delivery capacity of the gases allowed to be carried in the MEGC.

6.7.5.5.2 To determine the total required capacity of the pressure relief devices installed on the elements for the carriage of liquefied gases, the thermodynamic properties of the gas shall be considered (see, for example, CGA S-1.2-1995 for low pressure liquefied gases and CGA S-1.1-1994 for high pressure liquefied gases).

6.7.5.6 ***Marking of pressure-relief devices***

6.7.5.6.1 Spring loaded pressure relief devices shall be clearly and permanently marked with the following:

(a) the pressure (in bar or kPa) at which it is set to discharge;

(b) the allowable tolerance at the discharge pressure;

(c) the rated flow capacity of the device in standard cubic metres of air per second (m^3/s);

When practicable, the following information shall also be shown:

(d) the manufacturer's name and relevant catalogue number.

6.7.5.6.2 The rated flow capacity marked on frangible discs shall be determined according to CGA S-1.1-1994.

6.7.5.6.3 The rated flow capacity marked on spring loaded pressure relief devices for low pressure liquefied gases shall be determined according to ISO 4126-1:1991.

6.7.5.7 ***Connections to pressure-relief devices***

6.7.5.7.1 Connections to pressure-relief devices shall be of sufficient size to enable the required discharge to pass unrestricted to the pressure relief device. No stop-valve shall be installed between the element and the pressure-relief devices, except when duplicate devices are provided for maintenance or other reasons, and the stop-valves serving the devices actually in use are locked open, or the stop-valves are interlocked so that at least one of the duplicate devices is always operable and capable of meeting the requirements of 6.7.5.5. There shall be no obstruction in an opening leading to or leaving from a vent or pressure-relief device which might restrict or cut-off the flow from the element to that device. The opening through all piping and fittings shall have at least the same flow area as the inlet of the pressure relief device to which it is connected. The nominal size of the discharge piping shall be at least as large as that of the pressure relief device outlet. Vents from the pressure-relief devices, when used, shall deliver the relieved vapour or liquid to the atmosphere in conditions of minimum back-pressure on the relieving device.

6.7.5.8 ***Siting of pressure-relief devices***

6.7.5.8.1 Each pressure relief device shall, under maximum filling conditions, be in communication with the vapour space of the elements for the carriage of liquefied gases. The devices, when fitted, shall be so arranged as to ensure that the escaping vapour is discharged upwards and unrestrictedly as to prevent any impingement of escaping gas or liquid upon the MEGC, its elements or personnel. For flammable and oxidizing gases, the escaping gas shall be directed away from the element in such a manner that it cannot impinge upon the other elements. Heat resistant protective devices which deflect the flow of gas are permissible provided the required pressure relief device capacity is not reduced.

6.7.5.8.2 Arrangements shall be made to prevent access to the pressure-relief devices by unauthorized persons and to protect the devices from damage caused by the MEGC overturning.

6.7.5.9 ***Gauging devices***

6.7.5.9.1 When an MEGC is intended to be filled by mass, it shall be equipped with one or more gauging devices. Level-gauges made of glass or other fragile material shall not be used.

6.7.5.10 ***MEGC supports, frameworks, lifting and tie-down attachments***

6.7.5.10.1 MEGCs shall be designed and constructed with a support structure to provide a secure base during carriage. The forces specified in 6.7.5.2.8 and the safety factor specified in 6.7.5.2.10 shall be considered in this aspect of the design. Skids, frameworks, cradles or other similar structures are acceptable.

6.7.5.10.2 The combined stresses caused by element mountings (e.g. cradles, frameworks, etc.) and MEGC lifting and tie-down attachments shall not cause excessive stress in any element. Permanent lifting and tie-down attachments shall be fitted to all MEGCs. In no case shall mountings or attachments be welded onto the elements.

6.7.5.10.3 In the design of supports and frameworks, the effects of environmental corrosion shall be taken into account.

6.7.5.10.4 When MEGCs are not protected during carriage, according to 4.2.5.3, the elements and service equipment shall be protected against damage resulting from lateral or longitudinal impact or overturning. External fittings shall be protected so as to preclude the release of the elements' contents upon impact or overturning of the MEGC on its fittings. Particular attention shall be paid to the protection of the manifold. Examples of protection include:

(a) protection against lateral impact which may consist of longitudinal bars;

(b) protection against overturning which may consist of reinforcement rings or bars fixed across the frame;

(c) protection against rear impact which may consist of a bumper or frame;

(d) protection of the elements and service equipment against damage from impact or overturning by use of an ISO frame in accordance with the relevant provisions of ISO 1496-3:1995.

6.7.5.11 ***Design approval***

6.7.5.11.1 The competent authority or its authorized body shall issue a design approval certificate for any new design of an MEGC. This certificate shall attest that the MEGC has been surveyed by that authority, is suitable for its intended purpose and meets the requirements of this Chapter, the applicable provisions for gases of Chapter 4.1 and of packing instruction P200. When a series of MEGCs are manufactured without change in the design, the certificate shall be valid for the entire series. The certificate shall refer to the prototype test report, the materials of construction of the manifold, the standards to which the elements are made and an approval number. The approval number shall consist of the distinguishing sign or mark of the country granting the approval, i.e. the distinguishing sign for use in international traffic, as prescribed by the Convention on Road Traffic, Vienna 1968, and a registration number. Any alternative arrangements according to 6.7.1.2 shall be indicated on the certificate. A design approval may serve for the approval of smaller MEGCs made of materials of the same type and thickness, by the same fabrication techniques and with identical supports, equivalent closures and other appurtenances.

6.7.5.11.2 The prototype test report for the design approval shall include at least the following:

(a) the results of the applicable framework test specified in ISO1496-3:1995;

(b) the results of the initial inspection and test specified in 6.7.5.12.3;

(c) the results of the impact test specified in 6.7.5.12.1; and

(d) certification documents verifying that the cylinders and tubes comply with the applicable standards.

6.7.5.12 ***Inspection and testing***

6.7.5.12.1 For MEGCs meeting the definition of container in the CSC, a prototype representing each design shall be subjected to an impact test. The prototype MEGC shall be shown to be capable of absorbing the forces resulting from an impact not less than 4 times (4 g) the MPGM of the fully loaded MEGC at a duration typical of the mechanical shocks experienced in rail transport. The following is a listing of standards describing methods acceptable for performing the impact test:

Association of American Railroads,
Manual of Standards and Recommended Practices,
Specifications for Acceptability of Tank Containers (AAR.600), 1992

National Standard of Canada, CAN/CGSB-43.147-2002, "Construction, Modification, Qualification, Maintenance, and Selection and Use of Means of Containment for the Handling, Offering for Transport or Transporting of Dangerous Goods by Rail", March 2002, published by the Canadian General Standards Board (CGSB).

Deutsche Bahn AG
DB Systemtechnik, Minden
Verifikation und Versuche, TZF 96.2
Portable tanks, longitudinal impact test

Société Nationale des Chemins de Fer Français
C.N.E.S.T. 002-1966.
Tank containers, longitudinal external stresses and dynamic impact tests

Spoornet, South Africa
Engineering Development Centre (EDC)
Testing of ISO Tank Containers
Method EDC/TES/023/000/1991-06.

6.7.5.12.2 The elements and items of equipment of each MEGC shall be inspected and tested before being put into service for the first time (initial inspection and test). Thereafter, MEGCs shall be inspected at no more than five-year intervals (5 year periodic inspection). An exceptional inspection and test shall be performed, regardless of the last periodic inspection and test, when necessary according to 6.7.5.12.5.

6.7.5.12.3 The initial inspection and test of an MEGC shall include a check of the design characteristics, an external examination of the MEGC and its fittings with due regard to the gases to be carried, and a pressure test performed at the test pressures according to packing instruction P200 of 4.1.4.1. The pressure test of the manifold may be performed as a hydraulic test or by using another liquid or gas with the agreement of the competent authority or its authorized body. Before the MEGC is placed into service, a leakproofness test and a test of the satisfactory operation of all service equipment shall also be performed. When the elements and their fittings have been pressure-tested separately, they shall be subjected together after assembly to a leakproofness test.

6.7.5.12.4 The 5-year periodic inspection and test shall include an external examination of the structure, the elements and the service equipment in accordance with 6.7.5.12.6. The elements and the piping shall be tested at the periodicity specified in packing instruction P200 and in accordance with the provisions described in 6.2.1.5. When the elements and equipment have been pressure-tested separately, they shall be subjected together after assembly to a leakproofness test.

6.7.5.12.5 An exceptional inspection and test is necessary when the MEGC shows evidence of damaged or corroded areas, leakage, or other conditions that indicate a deficiency that could affect the integrity of the MEGC. The extent of the exceptional inspection and test shall depend on the amount of damage or deterioration of the MEGC. It shall include at least the examinations required under 6.7.5.12.6.

6.7.5.12.6 The examinations shall ensure that:

(a) the elements are inspected externally for pitting, corrosion, abrasions, dents, distortions, defects in welds or any other conditions, including leakage, that might render the MEGC unsafe for carriage;

(b) the piping, valves, and gaskets are inspected for corroded areas, defects, and other conditions, including leakage, that might render the MEGC unsafe for filling, discharge or carriage;

(c) missing or loose bolts or nuts on any flanged connection or blank flange are replaced or tightened;

(d) all emergency devices and valves are free from corrosion, distortion and any damage or defect that could prevent their normal operation. Remote closure devices and self-closing stop-valves shall be operated to demonstrate proper operation;

(e) required markings on the MEGC are legible and in accordance with the applicable requirements; and

(f) the framework, the supports and the arrangements for lifting the MEGC are in satisfactory condition.

6.7.5.12.7 The inspections and tests in 6.7.5.12.1, 6.7.5.12.3, 6.7.5.12.4 and 6.7.5.12.5 shall be performed or witnessed by a body authorized by the competent authority. When the pressure test is a part of the inspection and test, the test pressure shall be the one indicated on the data plate of the MEGC. While under pressure, the MEGC shall be inspected for any leaks in the elements, piping or equipment.

6.7.5.12.8 When evidence of any unsafe condition is discovered, the MEGC shall not be returned to service until it has been corrected and the applicable tests and verifications are passed.

6.7.5.13 ***Marking***

6.7.5.13.1 Every MEGC shall be fitted with a corrosion resistant metal plate permanently attached to the MEGC in a conspicuous place readily accessible for inspection. The elements shall be marked in accordance with Chapter 6.2. At least the following information shall be marked on the plate by stamping or by any other similar method:

Country of manufacture
U N Approval country Approval number For Alternative Arrangements (see 6.7.1.2) "AA"
Manufacturer's name or mark
Manufacturer's serial number
Authorized body for the design approval

Year of manufacture
Test pressure: _____ bar gauge
Design temperature range _____ °C to _____ °C
Number of elements _____
Total water capacity _____litres
Initial pressure test date and identification of the authorized body
Date and type of most recent periodic tests
Month _____ Year _____
Stamp of the authorized body which performed or witnessed the most recent test

NOTE: *No metal plate may be fixed to the elements.*

6.7.5.13.2 The following information shall be marked on a metal plate firmly secured to the MEGC:

Name of the operator
Maximum permissible load mass _____ kg
Working pressure at 15°C: _____ bar gauge
Maximum permissible gross mass (MPGM) _____ kg
Unladen (tare) mass _____ kg

CHAPTER 6.8

REQUIREMENTS FOR THE CONSTRUCTION, EQUIPMENT, TYPE APPROVAL, INSPECTIONS AND TESTS, AND MARKING OF FIXED TANKS (TANK-VEHICLES), DEMOUNTABLE TANKS AND TANK-CONTAINERS AND TANK SWAP BODIES, WITH SHELLS MADE OF METALLIC MATERIALS, AND BATTERY-VEHICLES AND MULTIPLE ELEMENT GAS CONTAINERS (MEGCs)

NOTE: *For portable tanks and UN multiple-element gas containers (MEGCs) see Chapter 6.7, for fibre-reinforced plastics tanks see Chapter 6.9, for vacuum operated waste tanks see Chapter 6.10.*

6.8.1 Scope

6.8.1.1 The requirements across the whole width of the page apply both to fixed tanks (tank-vehicles), to demountable tanks and battery-vehicles, and to tank-containers, tank swap bodies and MEGCs. Those contained in a single column apply only:

- to fixed tanks (tank-vehicles), to demountable tanks and battery-vehicles (left hand column);
- to tank-containers, tank swap bodies and MEGCs (right hand column).

6.8.1.2 These requirements shall apply to

fixed tanks (tank-vehicles), demountable tanks and battery-vehicles	tank-containers, tank swap bodies and MEGCs

used for the carriage of gaseous, liquid, powdery or granular substances.

6.8.1.3 Section 6.8.2 sets out the requirements applicable to fixed tanks (tank-vehicles), to demountable tanks, tank-containers, tank swap bodies intended for the carriage of substances of all classes and battery-vehicles and MEGCs for gases of Class 2. Sections 6.8.3 to 6.8.5 contain special requirements supplementing or modifying the requirements of section 6.8.2.

6.8.1.4 For provisions concerning use of these tanks, see Chapter 4.3.

6.8.2 Requirements applicable to all classes

6.8.2.1 *Construction*

Basic principles

6.8.2.1.1 Shells, their attachments and their service and structural equipment shall be designed to withstand without loss of contents (other than quantities of gas escaping through any degassing vents):

- static and dynamic stresses in normal conditions of carriage as defined in 6.8.2.1.2 and 6.8.2.1.13;
- prescribed minimum stresses as defined in 6.8.2.1.15.

6.8.2.1.2	The tanks and their fastenings shall be capable of absorbing, under the maximum permissible load, the forces exerted by: - in the direction of travel: twice the total mass; - at right angles to the direction of travel: the total mass; - vertically upwards: the total mass; - vertically downwards: twice the total mass.	Tank-containers and their fastenings shall, under the maximum permissible load be capable of absorbing the forces equal to those exerted by: - in the direction of travel: twice the total mass; - horizontally at right angles to the direction of travel: the total mass; (where the direction of travel is not clearly determined, twice the total mass in each direction); - vertically upwards: the total mass; - vertically downwards: twice the total mass.

6.8.2.1.3 The walls of the shells shall have at least the thickness specified in

6.8.2.1.17 to 6.8.2.1.21	6.8.2.1.17 to 6.8.2.1.20.

6.8.2.1.4 Shells shall be designed and constructed in accordance with the requirements of a technical code recognized by the competent authority, in which the material is chosen and the shell thickness determined taking into account maximum and minimum filling and working temperatures, but the following minimum requirements of 6.8.2.1.6 to 6.8.2.1.26 shall be met.

6.8.2.1.5 Tanks intended to contain certain dangerous substances shall be provided with additional protection. This may take the form of additional thickness of the shell (increased calculation pressure) determined in the light of the dangers inherent in the substances concerned or of a protective device (see the special provisions of 6.8.4).

6.8.2.1.6 Welds shall be skilfully made and shall afford the fullest safety. The execution and checking of welds shall comply with the requirements of 6.8.2.1.23.

6.8.2.1.7 Measures shall be taken to protect shells against the risk of deformation as a result of a negative internal pressure. Shells, other than shells according to 6.8.2.2.6, designed to be equipped with vacuum valves shall be able to withstand, without permanent deformation, an external pressure of not less than 21 kPa (0.21 bar) above the internal pressure. Shells used for the carriage of solid substances (powdery or granular) of packing groups II or III only, which do not liquefy during carriage, may be designed for a lower external pressure but not less than 5 kPa (0.05 bar). The vacuum valves shall be set to relieve at a vacuum setting not greater than the tank's design vacuum pressure. Shells, which are not designed to be equipped with a vacuum valve shall be able to withstand, without permanent deformation an external pressure of not less than 40 kPa (0.4 bar) above the internal pressure.

Materials for shells

6.8.2.1.8 Shells shall be made of suitable metallic materials which, unless other temperature ranges are prescribed in the various classes, shall be resistant to brittle fracture and to stress corrosion cracking between -20 °C and +50 °C.

6.8.2.1.9 The materials of shells or of their protective linings which are in contact with the contents shall not contain substances liable to react dangerously (see "Dangerous reaction" in 1.2.1) with the contents, to form dangerous compounds, or substantially to weaken the material.

If contact between the substance carried and the material used for the construction of the shell entails a progressive decrease in the shell thickness, this thickness shall be increased at manufacture by an appropriate amount. This additional thickness to allow for corrosion shall not be taken into consideration in calculating the shell thickness.

6.8.2.1.10 For welded shells only materials of faultless weldability whose adequate impact strength at an ambient temperature of –20 ºC can be guaranteed, particularly in the weld seams and the zones adjacent thereto, shall be used.

If fine-grained steel is used, the guaranteed value of the yield strength Re shall not exceed 460 N/mm^2 and the guaranteed value of the upper limit of tensile strength Rm shall not exceed 725 N/mm^2, in accordance with the specifications of the material.

6.8.2.1.11 Ratios of Re/Rm exceeding 0.85 are not allowed for steels used in the construction of welded tanks.

Re = apparent yield strength for steels having a clearly-defined yield point or

guaranteed 0.2% proof strength for steels with no clearly-defined yield point (1% for austenitic steels)

Rm = tensile strength.

The values specified in the inspection certificate for the material shall be taken as a basis in determining this ratio in each case.

6.8.2.1.12 For steel, the elongation at fracture, in % shall be not less than

$$\frac{10\,000}{\text{determined tensile stenght in N/mm}^2}$$

but in any case for fine-grained steels it shall be not less than 16% and not less than 20% for other steels.

For aluminium alloys the elongation at fracture shall be not less than 12% [1].

Calculation of the shell thickness

6.8.2.1.13 The pressure on which the shell thickness is based shall not be less than the calculation pressure, but the stresses referred to in 6.8.2.1.1 shall also be taken into account, and, if necessary, the following stresses:

---

[1] *In the case of sheet metal the axis of the tensile test-piece shall be at right angles to the direction of rolling. The permanent elongation at fracture shall be measured on test-pieces of circular cross-section in which the gauge length l is equal to five times the diameter d (l = 5d); if test-pieces of rectangular section are used, the gauge length shall be calculated by the formula*

$$l = 5{,}65\sqrt{F_o}\ ,$$

where F_o indicates the initial cross-section area of the test-piece.

In the case of vehicles in which the tank constitutes a stressed self-supporting member, the shell shall be designed to withstand the stresses thus imposed in addition to stresses from other sources.	
Under these stresses, the stress at the most severely stressed point of the shell and its fastenings shall not exceed the value σ defined in 6.8.2.1.16.	Under each of these stresses the safety factors to be observed shall be the following: - for metals having a clearly-defined yield point: a safety factor of 1.5 in relation to the apparent yield strength; or - for metals with no clearly-defined yield point: a safety factor of 1.5 in relation to the guaranteed 0.2% proof strength (1% maximum elongation for austenitic steels).

6.8.2.1.14 The calculation pressure is in the second part of the code (see 4.3.4.1) according to Column (12) of Table A of Chapter 3.2.

When "G" appears, the following requirements shall apply:

(a) Gravity-discharge shells intended for the carriage of substances having a vapour pressure not exceeding 110 kPa (1.1 bar) (absolute pressure) at 50 ºC shall be designed for a calculation pressure of twice the static pressure of the substance to be carried but not less than twice the static pressure of water;

(b) Pressure-filled or pressure-discharge shells intended for the carriage of substances having a vapour pressure not exceeding 110 kPa (1.1 bar) (absolute pressure) at 50 ºC shall be designed for a calculation pressure equal to 1.3 times the filling or discharge pressure;

When the numerical value of the minimum calculation pressure is given (gauge pressure) the shell shall be designed for this pressure which shall not be less than 1.3 times the filling or discharge pressure. The following minimum requirements shall apply in these cases:

(c) Shells intended for the carriage of substances having a vapour pressure of more than 110 kPa (1.1 bar) but not more than 175 kPa (1.75 bar) (absolute pressure) at 50 °C shall, whatever their filling or discharge system, be designed for a calculation pressure of not less than 150 kPa (1.5 bar) gauge pressure or 1.3 times the filling or discharge pressure, whichever is the higher;

(d) Shells intended for the carriage of substances having a vapour pressure of more than 175 kPa (1.75 bar) (absolute pressure) at 50 °C shall, whatever their filling or discharge system, be designed for a calculation pressure equal to 1.3 times the filling or discharge pressure but not less than 0.4 MPa (4 bar) (gauge pressure).

6.8.2.1.15 At the test pressure, the stress σ at the most severely stressed point of the shell shall not exceed the material-dependent limits prescribed below. Allowance shall be made for any weakening due to the welds.

6.8.2.1.16 For all metals and alloys, the stress σ at the test pressure shall be lower than the smaller of the values given by the following formulae:

$$\sigma \leq 0.75 \text{ Re or } \sigma \leq 0.5 \text{ Rm}$$

where

Re = apparent yield strength for steels having a clearly-defined yield point; or

guaranteed 0.2% proof strength for steels with no clearly-defined yield point (1% for austenitic steels)

Rm = tensile strength.

The values of Re and Rm to be used shall be specified minimum values according to material standards. If no material standard exists for the metal or alloy in question, the values of Re and Rm used shall be approved by the competent authority or by a body designated by that authority.

When austenitic steels are used, the specified minimum values according to the material standards may be exceeded by up to 15% if these higher values are attested in the inspection certificate. The minimum values shall, however, not be exceeded when the formula given in 6.8.2.1.18 is applied.

Minimum shell thickness

6.8.2.1.17 The shell thickness shell shall not be less than the greater of the values determined by the following formulae:

$$e = \frac{P_T D}{2 \sigma \lambda}$$

$$e = \frac{P_C D}{2 \sigma}$$

where:

e = minimum shell thickness in mm

P_T = test pressure in MPa

P_C = calculation pressure in MPa as specified in 6.8.2.1.14

D = internal diameter of shell in mm

σ = permissible stress, as defined in 6.8.2.1.16, in N/mm^2

λ = a coefficient not exceeding or equal to 1, allowing for any weakening due to welds, and linked to the inspection methods defined in 6.8.2.1.23.

The thickness shall in no case be less than that defined in

6.8.2.1.18 to 6.8.2.1.21.

6.8.2.1.18 to 6.8.2.1.20.

6.8.2.1.18	Shells of circular cross-section [2] not more than 1.80 m in diameter other than those referred to in 6.8.2.1.21, shall not be less than 5 mm thick if of mild steel [3], or of equivalent thickness if of another metal.	Shells shall be not less than 5 mm thick if of mild steel [3] (in conformity with the requirements of 6.8.2.1.11 and 6.8.2.1.12) or of equivalent thickness if of another metal.
	Where the diameter is more than 1.80 m, this thickness shall be increased to 6 mm except in the case of shells intended for the carriage of powdery or granular substances, if the shell is of mild steel [3], or to an equivalent thickness if of another metal.	Where the diameter is more than 1.80 m, this thickness shall be increased to 6 mm except in the case of tanks intended for the carriage of powdery or granular substances, if the shell is of mild steel [3] or to an equivalent thickness if of another metal. Whatever the metal used, the shell thickness shall in no case be less than 3 mm.

"Equivalent thickness" means the thickness obtained by the following formula [4]:

$$e_1 = \frac{464 e_0}{\sqrt[3]{(R_{m1} A_1)^2}}$$

6.8.2.1.19	Where protection of the tank against damage through lateral impact or overturning is provided according to 6.8.2.1.20, the competent authority may allow the aforesaid minimum thicknesses to be reduced in proportion to the protection provided; however, the said thicknesses shall not be less than 3 mm in the case of mild steel [3], or than an equivalent thickness in the case of other materials, for shells not more than	Where protection of the tank against damage is provided according to 6.8.2.1.20, the competent authority may allow the aforesaid minimum thicknesses to be reduced in proportion to the protection provided; however, the said thicknesses shall be not less than 3 mm in the case of mild steel [3], or than an equivalent thickness in the case of other materials, for shells not more than 1.80 m in diameter. For shells of a diameter

[2] *For shells not of a circular cross-section, for example box-shaped or elliptical shells, the indicated diameters shall correspond to those calculated on the basis of a circular cross-section of the same area. For such shapes of cross-section the radius of convexity of the shell wall shall not exceed 2 000 mm at the sides or 3 000 mm at the top and bottom.*

[3] *For the definitions of "mild steel" and "reference steel" see 1.2.1.*

[4] *This formula is derived from the general formula:*

$$e_1 = e_0 \sqrt[3]{\left(\frac{R_{m0} A_0}{R_{m1} A1}\right)^2}$$

where

e_1	=	*minimum shell thickness for the metal chosen, in mm;*
e_o	=	*minimum shell thickness for mild steel, in mm, according to 6.8.2.1.18 and 6.8.2.1.19;*
Rm_o	=	*370 (tensile strength for reference steel, see definition 1.2.1, in N/mm²);*
A_o	=	*27 (elongation at fracture for reference steel, in %);*
Rm_1	=	*minimum tensile strength of the metal chosen, in N/mm²; and*
A_1	=	*minimum elongation at fracture of the metal chosen under tensile stress, in %.*

1.80 m in diameter. For shells with a diameter exceeding 1.80 m the aforesaid minimum thickness shall be increased to 4 mm in the case of mild steel [3] and to an equivalent thickness in the case of other metals.

exceeding 1.80 m this minimum thickness shall be increased to 4 mm in the case of mild steel [3], and to an equivalent thickness in the case of other metals.

Equivalent thickness means the thickness given by the formula in 6.8.2.1.18.

Equivalent thickness means the thickness given by the formula in 6.8.2.1.18.

Except in cases for which 6.8.2.1.21 provide, the thickness of shells with protection against damage in accordance with 6.8.2.1.20 (a) or (b) shall not be less than the values given in the table below.

The thickness of shells with protection against damage in accordance with 6.8.2.1.20 shall not be less than the values given in the table below.

	Diameter of shell	**≤ 1.80 m**	**> 1.80 m**
Minimum thickness of shells	Stainless austenitic steels	2.5 mm	3 mm
	Other steels	3 mm	4 mm
	Aluminium alloys	4 mm	5 mm
	Pure aluminium of 99.80%	6 mm	8 mm

6.8.2.1.20 For tanks built after 1 January 1990, there is protection against damage as referred to in 6.8.2.1.19 when the following measures or equivalent measures are adopted:

(a) For tanks intended for the carriage of powdery or granular substances, the protection against damage shall satisfy the competent authority.

The protection referred to in 6.8.2.1.19 may consist of:

- overall external structural protection as in "sandwich" construction where the sheathing is secured to the shell; or
- a structure in which the shell is supported by a complete skeleton including longitudinal and transverse structural members; or
- double-wall construction.

(b) For tanks intended for the carriage of other substances, there is protection against damage when:

1. For shells with a circular or elliptical cross-section having a maximum radius of curvature of 2 m, the shell is equipped with strengthening members comprising partitions, surge-plates or external or internal rings, so placed that at least one of the following conditions is met:

Where the tanks are made with double walls, the space between being evacuated of air, the aggregate thickness of the outer metal wall and the shell wall shall correspond to the minimum wall thickness prescribed in 6.8.2.1.18, the thickness of the wall of the shell itself being not less than the minimum thickness prescribed in 6.8.2.1.19.

Where tanks are made with double walls with an intermediate layer of solid materials at least 50 mm thick, the outer wall shall have a thickness of not less than 0.5 mm if it

[3] *For the definitions of "mild steel" and "reference steel" see 1.2.1.*

- Distance between two adjacent strengthening elements of not more than 1.75 m.

- Volume contained between two partitions or surge-plates of not more than 7 500 l.

The vertical cross-section of a ring, with the associated coupling, shall have a section modulus of at least 10 cm^3.

External rings shall not have projecting edges with a radius of less than 2.5 mm.

Partitions and surge-plates shall conform to the requirements of 6.8.2.1.22.

The thickness of the partitions and surge-plates shall in no case be less than that of the shell.

2. For tanks made with double walls, the space between being evacuated of air, the aggregate thickness of the outer metal wall and the shell wall corresponds to the wall thickness prescribed in 6.8.2.1.18, and the thickness of the wall of the shell itself is not less than the minimum thickness prescribed in 6.8.2.1.19.

3. For tanks made with double walls having an intermediate layer of solid materials at least 50 mm thick, the outer wall has a thickness of at least 0.5 mm of mild steel [3] or at least 2 mm of a plastics material reinforced with glass fibre. Solid foam (with an impact absorption capacity like that, for example, of polyurethane foam) may be used as the intermediate layer of solid material.

4. Shells of forms other than in 1, especially box-shaped shells, are provided, all round the mid-point of is made of mild steel [3] or at least 2 mm if it is made of a plastics material reinforced with glass fibre. Solid foam with an impact absorption capacity such as that, for example, of polyurethane foam, may be used as the intermediate layer of solid material.

[3] *For the definitions of "mild steel" and "reference steel" see 1.2.1.*

their vertical height and over at least 30% of their height with a protection designed in such a way as to offer specific resilience at least equal to that of a shell constructed in mild steel [3] of a thickness of 5 mm (for a shell diameter not exceeding 1.80 m) or 6 mm (for a shell diameter exceeding 1.80 m). The protection shall be applied in a durable manner to the outside of the shell.

This requirement shall be considered to have been met without further proof of the specific resilience when the protection involves the welding of a plate of the same material as the shell to the area to be strengthened, so that the minimum wall thickness is in accordance with 6.8.2.1.18.

This protection is dependent upon the possible stresses exerted on mild steel [3] shells in the event of an accident, where the ends and walls have a thickness of at least 5 mm for a diameter not exceeding 1.80 m or at least 6 mm for a diameter exceeding 1.80 m. If another metal is used, the equivalent thickness shall be obtained in accordance with the formula in 6.8.2.1.18.

For demountable tanks this protection is not required when they are protected on all sides by the drop sides of the carrying vehicle.

6.8.2.1.21 The thickness of shells designed in accordance with 6.8.2.1.14 (a) which either are of not more than 5 000 litres capacity or are divided into leakproof compartments of not more than 5 000 litres unit capacity may be adjusted to a level which, unless prescribed otherwise in 6.8.3 or 6.8.4, shall however not be less than the appropriate value shown in the following table:

[3] *For the definitions of "mild steel" and "reference steel" see 1.2.1.*

Maximum radius of curvature of shell (m)	Capacity of shell or shell compartment (m^3)	Minimum thickness (mm)
		Mild steel
≤ 2	≤ 5.0	3
2 - 3	≤ 3.5	3
	> 3.5 but ≤ 5.0	4

Where a metal other than mild steel [3] is used, the thickness shall be determined by the equivalence formula given in 6.8.2.1.18 and shall not be less than the values given in the following table:

	Maximum radius of curvature of shell (m)	≤ 2	2-3	2-3
	Capacity of shell or shell compartment (m^3)	≤ 5.0	≤ 3.5	> 3.5 but ≤ 5.0
Minimum thickness of shell	Austenitic stainless steels	2.5 mm	2.5 mm	3 mm
	Other steels	3 mm	3 mm	4 mm
	Aluminium alloys	4 mm	4 mm	5 mm
	Pure aluminium at 99.80%	6 mm	6 mm	8 mm

The thickness of the partitions and surge-plates shall in no case be less than that of the shell.

6.8.2.1.22 Surge-plates and partitions shall be dished, with a depth of dish of not less than 10 cm, or shall be corrugated, profiled or otherwise reinforced to give equivalent strength. The area of the surge plate shall be at least 70% of the cross-sectional area of the tank in which the surge-plate is fitted.

[3] *For the definitions of "mild steel" and "reference steel" see 1.2.1.*

Welding and inspection of welds

6.8.2.1.23 The manufacturer's qualification for performing welding operations shall be one recognized by the competent authority. Welding shall be performed by skilled welders using a welding process whose effectiveness (including any heat treatments required) has been demonstrated by test. Non-destructive tests shall be carried out by radiography or by ultrasound and must confirm that the quality of the welding is appropriate to the stresses.

The following checks shall be carried out in accordance with the value of the coefficient λ used in determining the thickness of the shell in 6.8.2.1.17:

$\lambda = 0.8$: the weld beads shall so far as possible be inspected visually on both faces and shall be subjected to a non-destructive spot check with particular attention to connections;

$\lambda = 0.9$: all longitudinal beads throughout their length, all connections, 25% of circular beads, and welds for the assembly of large-diameter items of equipment shall be subjected to non-destructive checks. Beads shall be checked visually on both sides as far as possible;

$\lambda = 1$: all beads shall be subjected to non-destructive checks and are so far as possible inspected visually on both sides. A weld test-piece shall be taken.

Where the competent authority has doubts regarding the quality of weld beads, it may require additional checks.

Other construction requirements

6.8.2.1.24 The protective lining shall be so designed that its leakproofness remains intact, whatever the deformation liable to occur in normal conditions of carriage (see 6.8.2.1.2).

6.8.2.1.25 The thermal insulation shall be so designed as not to hinder access to, or the operation of, filling and discharge devices and safety valves.

6.8.2.1.26 If shells intended for the carriage of flammable liquids having a flash-point of not more than 61ºC are fitted with non-metallic protective linings (inner layers), the shells and the protective linings shall be so designed that no danger of ignition from electrostatic charges can occur.

6.8.2.1.27 Shells intended for the carriage of liquids having a flash-point of not more than 61 C or for the carriage of flammable gases, or of UN No.1361 carbon or UN No.1361 carbon black, packing group II, shall be linked to the chassis by means of at least one good electrical connection. Any metal contact capable of causing electrochemical corrosion shall be avoided. Shells shall be provided with at least one earth fitting clearly marked with the symbol " ⏚ ", capable of being electrically connected.

All parts of a tank-container intended for the carriage of liquids having a flash-point of not more than 61 C, flammable gases, or UN No.1361 carbon or UN No.1361 carbon black, packing group II, shall be capable of being electrically earthed. Any metal contact capable of causing electrochemical corrosion shall be avoided.

6.8.2.1.28 *Protection of fittings mounted on the upper part of the tank*

The fittings and accessories mounted on the upper part of the tank shall be protected against damage caused by overturning. This protection may take the form of strengthening rings, protective canopies or transverse or longitudinal members so shaped that effective protection is given.

6.8.2.2 ***Items of equipment***

6.8.2.2.1 Suitable non-metallic materials may be used to manufacture service and structural equipment.

The items of equipment shall be so arranged as to be protected against the risk of being wrenched off or damaged during carriage or handling. They shall exhibit a suitable degree of safety comparable to that of the shells themselves, and shall in particular:

- be compatible with the substances carried; and

- meet the requirements of 6.8.2.1.1.

As many operating parts as possible shall be served by the smallest possible number of openings in the shell. The leakproofness of the service equipment including the closure (cover) of the inspection openings shall be ensured even in the event of overturning of the tank, taking into account the forces generated by an impact (such as acceleration and dynamic pressure). Limited release of the tank contents due to a pressure peak during the impact is however allowed.

The leakproofness of the service equipment shall be ensured even in the event of the overturning of the tank-container.

The gaskets shall be made of a material compatible with the substance carried and shall be replaced as soon as their effectiveness is impaired, for example as a result of ageing.

Gaskets ensuring the leakproofness of fittings requiring manipulation during normal use of tanks shall be so designed and arranged that manipulation of the fittings incorporating them does not damage them.

6.8.2.2.2 Each bottom-filling or bottom-discharge opening in tanks which are referred to, in Column (12) of Table A of Chapter 3.2, with a tank code including the letter "A" in its third part (see 4.3.4.1.1) shall be equipped with at least two mutually independent closures, mounted in series, comprising

- an external stop-valve with piping made of a malleable metal material and

- a closing device at the end of each pipe which may be a screw-threaded plug, a blank flange or an equivalent device.

Each bottom-filling or bottom-discharge opening in tanks which are referred to, in Column (12) of Table A of Chapter 3.2, with a tank code including the letter "B" in its third part (see 4.3.3.1.1 or 4.3.4.1.1) shall be equipped with at least three mutually independent closures, mounted in series, comprising

- an internal stop-valve, i.e. a stop-valve mounted inside the shell or in a welded flange or companion flange;

- an external stop-valve or an equivalent device [5]

  one at the end of each pipe | as near as possible to the shell

and

- a closing device at the end of each pipe, which may be a screw-threaded plug, a blank flange or an equivalent device.

However, in the case of tanks intended for the carriage of certain crystallizable or highly viscous substances and shells fitted with an ebonite or thermoplastic coating, the internal stop-valve may be replaced by an external stop-valve provided with additional protection.

The internal stop-valve shall be operable either from above or from below. Its setting - open or closed - shall so far as possible in each case be capable of being verified from the ground. Internal stop-valve control devices shall be so designed as to prevent any unintended opening through impact or an inadvertent act.

The internal shut-off device shall continue to be effective in the event of damage to the external control device.

In order to avoid any loss of contents in the event of damage to the external fittings (pipes, lateral shut-off devices), the internal stop-valve and its seating shall be protected against the danger of being wrenched off by external stresses or shall be so designed as to resist them. The filling and discharge devices (including flanges or threaded plugs) and protective caps (if any) shall be capable of being secured against any unintended opening.

The position and/or direction of closure of shut-off devices shall be clearly apparent.

All openings of tanks which are referred to in Column (12) of Table A of Chapter 3.2, by a tank code including letter "C" or "D" in its third part (see 4.3.3.1.1 and 4.3.4.1.1) shall be situated above the surface level of the liquid. These tanks shall have no pipes or pipe connections below the surface level of the liquid. The cleaning openings (fist-holes) are, however, permitted in the lower part of the shell for tanks referred to by a tank code including letter "C" in its third part. This opening shall be capable of being sealed by a flange so closed as to be leakproof and whose design shall be approved by the competent authority or by a body designated by that authority.

6.8.2.2.3 Tanks that are not hermetically closed may be fitted with vacuum valves to avoid an unacceptable negative internal pressure; these vacuum-relief valves shall be set to relieve at a vacuum setting not greater than the vacuum pressure for which the tank has been designed (see 6.8.2.1.7). Hermetically closed tanks may not be fitted with vacuum valves, unless otherwise prescribed in the special provisions of 6.8.4.

---

[5] *In the case of tank-containers of less than 1 m^3 capacity, the external stop-valve or other equivalent device may be replaced by a blank flange.*

6.8.2.2.4 The shell or each of its compartments shall be provided with an opening large enough to permit inspection.

6.8.2.2.5 *(Reserved)*

6.8.2.2.6 Tanks intended for the carriage of liquids having a vapour pressure of not more than 110 kPa (1.1 bar) (absolute) at 50 °C shall have a venting system and a safety device to prevent the contents from spilling out if the tank overturns; otherwise they shall conform to 6.8.2.2.7 or 6.8.2.2.8.

6.8.2.2.7 Tanks intended for the carriage of liquids having a vapour pressure of more than 110 kPa (1.1 bar) but not exceeding 175 kPa (1.75 bar) (absolute) at 50 °C shall have a safety valve set at not less than 150 kPa (1.5 bar) (gauge pressure) and which shall be fully open at a pressure not exceeding the test pressure; otherwise they shall conform to 6.8.2.2.8.

6.8.2.2.8 Tanks intended for the carriage of liquids having a vapour pressure of more than 175 kPa (1.75 bar) but not exceeding 300 kPa (3 bar) (absolute) at 50° C shall have a safety valve set at not less than 300 kPa (3 bar) gauge pressure and which shall be fully open at a pressure not exceeding the test pressure; otherwise they shall be hermetically closed [6].

6.8.2.2.9 Movable parts such as covers, closures, etc., which are liable to come into frictional or percussive contact with aluminium shells intended for the carriage of flammable liquids having a flash-point of not more than 61 °C or for the carriage of flammable gases shall not be made of unprotected corrodible steel.

6.8.2.2.10 If tanks required to be hermetically closed are equipped with safety valves, these shall be preceded by a bursting disc and the following conditions shall be observed:

The arrangement of the bursting disc and safety valve shall be such as to satisfy the competent authority. A pressure gauge or another suitable indicator shall be provided in the space between the bursting disc and the safety valve, to enable detection of any rupture, perforation or leakage of the disc which may disrupt the action of the safety valve.

6.8.2.3 ***Type approval***

6.8.2.3.1 The competent authority or a body designated by that authority shall issue in respect of each new type of tank-vehicle, demountable tank, tank-container, tank swap body, battery-vehicle or MEGC a certificate attesting that the type, including fastenings, which it has inspected is suitable for the purpose for which it is intended and meets the construction requirements of 6.8.2.1, the equipment requirements of 6.8.2.2 and the special conditions for the classes of substances carried.

The certificate shall show:

- the results of the test;
- an approval number for the type;

The approval number shall consist of the distinguishing sign [7] of the State in whose territory the approval was granted and a registration number.

[6] *For the definition of "hermetically closed tank" see 1.2.1.*

[7] *Distinguishing sign for use in international traffic prescribed by the Convention on Road Traffic (Vienna, 1968).*

- the tank code in accordance with 4.3.3.1.1 or 4.3.4.1.1;

- special construction (TC), equipment (TE) and type approval (TA) requirements of 6.8.4 applicable to the type;

- if required, the substances and/or group of substances for the carriage of which the tank has been approved. These shall be shown with their chemical name or the corresponding collective entry (see 2.1.1.2), together with their classification (Class, classification code and packing group). With the exception of substances of Class 2 and those listed in 4.3.4.1.3, the listing of approved substances may be dispensed with. In such cases, groups of substances permitted on the basis of the tank code shown in the rationalised approach in 4.3.4.1.2 shall be accepted for carriage taking into account any relevant special provision.

The substances referred to in the certificate or the groups of substances approved according to the rationalised approach shall, in general, be compatible with the characteristics of the tank. A reservation shall be included in the certificate if it was not possible to investigate this compatibility exhaustively when the type approval was issued.

6.8.2.3.2 If the tanks, battery-vehicles or MECGs are manufactured in series without modification this approval shall be valid for the tanks, battery-vehicles or MECGs manufactured in series or according to the prototype.

A type approval may however serve for the approval of tanks with limited variations of the design that either reduce the loads and stresses on the tanks (e.g. reduced pressure, reduced mass, reduced volume) or increase the safety of the structure (e.g. increased shell thickness, more surge-plates, decreased diameter of openings). The limited variations shall be clearly described in the type approval certificate.

6.8.2.4 ***Inspections and tests***

6.8.2.4.1 Shells and their equipment shall either together or separately undergo an initial inspection before being put into service. This inspection shall include:

- a check of conformity to the approved type;
- a check of the design characteristics [8]
- an examination of the internal and external conditions;
- a hydraulic pressure test [9] at the test pressure indicated on the plate prescribed in 6.8.2.5.1; and
- a leakproofness test and a check of satisfactory operation of the equipment.

Except in the case of Class 2, the test pressure for the hydraulic pressure test depends on the calculation pressure and shall be at least equal to the pressure indicated below:

---

[8] *The check of the design characteristics shall also include, for shells requiring a test pressure of 1 MPa (10 bar) or higher, the taking of weld test-pieces (work samples) in accordance with 6.8.2.1.23 and the tests prescribed in 6.8.5.*

[9] *In special cases and with the agreement of the expert approved by the competent authority, the hydraulic pressure test may be replaced by a pressure test using another liquid or gas, where such an operation does not present any danger.*

Calculation pressure (bar)	Test pressure (bar)
G [10]	G [10]
1.5	1.5
2.65	2.65
4	4
10	4
15	4
21	10 (4) [11]

The minimum test pressures for Class 2 are given in the table of gases and gas mixtures in 4.3.3.2.5.

The hydraulic pressure test shall be carried out on the shell as a whole and separately on each compartment of compartmented shells.

The test shall be carried out on each compartment at a pressure at least equal to 1.3 times the maximum working pressure.

The hydraulic pressure test shall be carried out before the installation of a thermal insulation as may be necessary.

If the shells and their equipment are tested separately, they shall be jointly subjected to a leakproofness test after assembly in accordance with 6.8.2.4.3.

The leakproofness test shall be carried out separately on each compartment of compartmented shells.

6.8.2.4.2 Shells and their equipment shall undergo periodic inspections at fixed intervals. The periodic inspections shall include: an external and internal examination and, as a general rule, a hydraulic pressure test [9] (for the test pressure for the shells and compartments if applicable, see 6.8.2.4.1).

Sheathing for thermal or other insulation shall be removed only to the extent required for reliable appraisal of the characteristics of the shell.

In the case of tanks intended for the carriage of powdery or granular substances, and with the agreement of the expert approved by the competent authority, the periodic hydraulic pressure test may be omitted and replaced by leakproofness tests in accordance with 6.8.2.4.3, at an effective internal pressure at least equal to the maximum working pressure.

The maximum intervals for inspection shall be six years.

The maximum intervals for inspections shall be five years.

[9] *In special cases and with the agreement of the expert approved by the competent authority, the hydraulic pressure test may be replaced by a pressure test using another liquid or gas, where such an operation does not present any danger.*

[10] *G = minimum calculation pressure according to the general requirements of 6.8.2.1.14 (see 4.3.4.1).*

[11] *Minimum test pressure for UN No. 1744 bromine or UN No. 1744 bromine solution.*

6.8.2.4.3 In addition, a leakproofness test of the shell with its equipment and a check of the satisfactory operation of all the equipment shall be carried out

at least every three years. | at least every two and a half years.

For this purpose the tank shall be subjected to an effective internal pressure at least equal to the maximum working pressure. For tanks intended for the carriage of liquids or solids in the granular or powdery state, when a gas is used for the leakproofness test it shall be carried out at a pressure at least equal to 25% of the maximum working pressure. In all cases, it shall not be less than 20 kPa (0.2 bar) (gauge pressure).

For tanks equipped with venting systems and a safety device to prevent the contents spilling out if the tank overturns, the pressure test shall be equal to the static pressure of the filling substance.

The leakproofness test shall be carried out separately on each compartment of compartmented shells.

6.8.2.4.4 When the safety of the tank or of its equipment may have been impaired as a result of repairs, alterations or accident, an exceptional check shall be carried out.

6.8.2.4.5 The tests, inspections and checks in accordance with 6.8.2.4.1 to 6.8.2.4.4 shall be carried out by the expert approved by the competent authority. Certificates shall be issued showing the results of these operations. These certificates shall refer to the list of the substances permitted for carriage in this tank or to the tank code in accordance with 6.8.2.3.

6.8.2.5 ***Marking***

6.8.2.5.1 Every tank shall be fitted with a corrosion-resistant metal plate permanently attached to the tank in a place readily accessible for inspection. The following particulars at least shall be marked on the plate by stamping or by any other similar method. These particulars may be engraved directly on the walls of the shell itself, if the walls are so reinforced that the strength of the shell is not impaired [12]:

- approval number;
- manufacturer's name or mark;
- manufacturer's serial number;
- year of manufacture;
- test pressure (gauge pressure);
- capacity -in the case of multiple-element shells, the capacity of each element;
- design temperature (only if above +50 ºC or below -20 ºC);
- date (month and year) of initial test and most recent periodic test in accordance with 6.8.2.4.1, 6.8.2.4.2 or 6.8.2.4.3;
- stamp of the expert who carried out the tests;

[12] *Add the units of measurement after the numerical values.*

- material of the shell and reference to materials standards, if available and, where appropriate, the protective lining;

- test pressure on the shell as a whole and test pressure by compartment in MPa or bar (gauge pressure) where the pressure by compartment is less than the pressure on the shell.

In addition, the maximum working pressure allowed shall be inscribed on pressure-filled or pressure-discharge tanks.

6.8.2.5.2 The following particulars shall be inscribed on the tank-vehicle itself or on a plate [12]:

- name of owner or operator;
- unladen mass; and
- maximum permissible mass.

These particulars shall not be required in the case of a vehicle carrying demountable tanks.

The tank code according to 4.3.4.1.1 shall be inscribed on the demountable tank itself or on a plate.

The following particulars shall be inscribed either on the tank-container itself or on a plate [12]:

- names of owner and of operator;
- capacity of the shell;
- tare;
- maximum permissible laden mass;
- for the substances according to 4.3.4.1.3, the proper shipping name of the substance(s) accepted for carriage;
- tank code according to 4.3.4.1.1;
- for substances other than those according to 4.3.4.1.3, the alphanumerical codes of all applicable special provisions TC, TE and TA according to 6.8.4.

6.8.2.6 ***Requirements for tanks which are designed, constructed and tested according to standards***

NOTE: *Persons or bodies identified in standards as having responsibilities in accordance with ADR shall meet the requirements of ADR.*

The requirements of Chapter 6.8 are considered to have been complied with if the following standards are applied:

Applicable sub-sections and paragraphs	**Reference**	**Title of document**
For all tanks		
6.8.2.1	EN 14025:2003	Tanks for the transport of dangerous goods - Metallic pressure tanks - Design and construction
For testing and inspection		
6.8.2.4 6.8.3.4	EN 12972:2001 (with the exception of annexes D and E)	Tanks for transport of dangerous goods - Testing, inspection and marking of metallic tanks

[12] *Add the units of measurement after the numerical values.*

For tanks for gases of class 2		
6.8.2.1(with the exception of 6.8.2.1.17); 6.8.2.4.1 (with the exclusion of the leakproofness test); 6.8.2.5.1, 6.8.3.1 and 6.8.3.5.1	EN 12493:2001 (except Annex C)	Welded steel tanks for liquefied petroleum gas (LPG) – Road tankers – Design and manufacture Note: Road tankers is to be understood in the meaning of "fixed tanks" and "demountable tanks" as per ADR.
6.8.3.2 (with the exception of 6.8.3.2.3)	EN 12252:2000	Equipping of LPG road tankers Note: Road tankers is to be understood in the meaning of "fixed tanks" and "demountable tanks" as per ADR.
6.8.2.1 (with the exception of 6.8.2.1.17), 6.8.2.4, 6.8.3.1 and 6.8.3.4	EN 13530-2:2002	Cryogenic vessels – Large transportable vacuum insulated vessels – Part 2: Design, fabrication, inspection and testing
6.8.2.1 (with the exception of 6.8.2.1.17, 6.8.2.1.19 and 6.8.2.1.20), 6.8.2.4, 6.8.3.1 and 6.8.3.4	EN 14398-2:2003 (except Table 1)	Cryogenic vessels - Large transportable non-vacuum insulated vessels - Part 2: Design, fabrication, inspection and testing
For tanks intended for the carriage of liquid petroleum products and other dangerous substances of Class 3 which have a vapour pressure not exceeding 110 kPa at 50 °C and petrol, and which have no toxic or corrosive subsidiary hazard		
6.8.2.1	EN 13094:2004	Tanks for the transport of dangerous goods – Metallic tanks with a working pressure not exceeding 0.5 bar – Design and construction
6.8.2.2 and 6.8.2.4.1	EN 13082:2001	Tanks for transport of dangerous goods – Service equipment for tanks – Vapour transfer valve
	EN 13308: 2002	Tanks for transport of dangerous goods – Service equipment for tanks – Non pressure balanced footvalve
	EN 13314: 2002	Tanks for transport of dangerous goods – Service equipment for tanks – Fill hole cover
	EN 13316: 2002	Tanks for transport of dangerous goods – Service equipment for tanks – Pressure balanced footvalve
	EN 13317:2002	Tanks for transport of dangerous goods – Service equipment for tanks – Manhole cover assembly

6.8.2.7 ***Requirements for tanks which are not designed, constructed and tested according to standards***

Tanks which are not designed, constructed and tested in accordance with the standards set out in 6.8.2.6 shall be designed, constructed and tested in accordance with the provisions of a technical code providing the same level of safety and recognised by the competent authority. Tanks shall, however, comply with the minimum requirements of 6.8.2. For testing, inspection and marking, the applicable standard as referred to in 6.8.2.6 may also be used.

6.8.3 Special requirements applicable to Class 2

6.8.3.1 *Construction of shells*

6.8.3.1.1 Shells intended for the carriage of compressed or liquefied gases or dissolved gases shall be made of steel. In the case of weldless shells, by derogation from 6.8.2.1.12 a minimum elongation at fracture of 14% and also a stress σ lower than or equal to limits hereafter given according to the material may be accepted:

(a) When the ratio Re/Rm (of the minimum guaranteed characteristics after heat treatment) is higher than 0.66 without exceeding 0.85:

$$\sigma \leq 0.75 \text{ Re};$$

(b) When the ratio Re/Rm (of the minimum guaranteed characteristics after heat treatment) is higher than 0.85:

$$\sigma \leq 0.5 \text{ Rm}.$$

6.8.3.1.2 The requirements of 6.8.5 apply to the materials and construction of welded shells.

6.8.3.1.3 *(Reserved)*

Construction of battery-vehicles and MEGCs

6.8.3.1.4 Cylinders, tubes, pressure drums and bundles of cylinders, as elements of a battery-vehicle or MEGC, shall be constructed in accordance with Chapter 6.2.

NOTE 1: *Bundles of cylinders which are not elements of a battery-vehicle or of a MEGC shall be subject to the requirements of Chapter 6.2.*

NOTE 2: *Tanks as elements of battery-vehicles and MEGCs shall be constructed in accordance with 6.8.2.1 and 6.8.3.1.*

NOTE 3: *Demountable tanks[13] are not to be considered elements of battery-vehicles or MEGCs.*

6.8.3.1.5 Elements and their fastenings shall be capable of absorbing under the maximum permissible load the forces defined in 6.8.2.1.2. Under each force the stress at the most severely stressed point of the element and its fastenings shall not exceed the value defined in 6.2.3.1 for cylinders, tubes, pressure drums and bundles of cylinders and for tanks the value of σ defined in 6.8.2.1.16.

6.8.3.2 *Items of equipment*

6.8.3.2.1 The discharge pipes of tanks shall be capable of being closed by blank flanges or some other equally reliable device. For tanks intended for the carriage of refrigerated liquefied gases, these blank flanges or other equally reliable devices may be fitted with pressure-release openings of a maximum diameter of 1.5 mm.

6.8.3.2.2 Shells intended for the carriage of liquefied gases may be provided with, in addition to the openings prescribed in 6.8.2.2.2 and 6.8.2.2.4, openings for the fitting of gauges, thermometers, manometers and with bleed holes, as required for their operation and safety.

---

[13] *For the definition of "demountable tank" see 1.2.1.*

6.8.3.2.3 Filling and discharge openings of tanks

| with a capacity greater than 1 m^3

intended for the carriage of liquefied flammable and/or toxic gases shall be equipped with an instant-closing internal safety device which closes automatically in the event of an unintended movement of the shell or of fire. It shall also be possible to operate the closing device by remote control.

6.8.3.2.4 All openings, other than those accommodating safety valves and closed bleed holes, of tanks intended for the carriage of liquefied flammable and/or toxic gases shall, if their nominal diameter is more than 1.5 mm, shall be equipped with an internal shut-off device.

6.8.3.2.5 Notwithstanding the requirements of 6.8.2.2.2, 6.8.3.2.3 and 6.8.3.2.4, tanks intended for the carriage of refrigerated liquefied gases may be equipped with external devices in place of internal devices if the external devices afford protection against external damage at least equivalent to that afforded by the wall of the shell.

6.8.3.2.6 If the tanks are equipped with gauges in direct contact with the substance carried, the gauges shall not be made of a transparent material. If there are thermometers, they shall not project directly into the gas or liquid through the shell.

6.8.3.2.7 Filling and discharge openings situated in the upper part of tanks shall be equipped with, in addition to what is prescribed in 6.8.3.2.3, a second, external, closing device. This device shall be capable of being closed by a blank flange or some other equally reliable device.

6.8.3.2.8 Safety valves shall meet the requirements of 6.8.3.2.9 to 6.8.3.2.12 below:

6.8.3.2.9 Tanks intended for the carriage of compressed or liquefied gases or dissolved gases, may be fitted with spring-loaded safety valves. These valves shall be capable of opening automatically under a pressure between 0.9 and 1.0 times the test pressure of the tank to which they are fitted. They shall be of such a type as to resist dynamic stresses, including liquid surge. The use of dead weight or counter weight valves is prohibited. The required capacity of the safety valves shall be calculated in accordance with the formula contained in 6.7.3.8.1.1.

6.8.3.2.10 Where tanks are intended for carriage by sea, the requirements of 6.8.3.2.9 shall not prohibit the fitting of safety valves conforming to the IMDG Code.

6.8.3.2.11 Tanks intended for the carriage of refrigerated liquefied gases shall be equipped with two independent safety valves, each so designed as to allow the gases formed by evaporation during normal operation to escape from the tank in such a way that the pressure does not at any time exceed by more than 10% the working pressure indicated on the tank.

One of the two safety valves may be replaced by a bursting disc which shall be such as to burst at the test pressure.

In the event of loss of the vacuum in a double-walled tank, or of destruction of 20% of the insulation of a single-walled tank, the safety valve and the bursting disc shall permit an outflow such that the pressure in the shell cannot exceed the test pressure.

6.8.3.2.12 The safety valves of tanks intended for the carriage of refrigerated liquefied gases shall be capable of opening at the working pressure indicated on the tank. They shall be so designed as to function faultlessly even at their lowest working temperature. The reliability of their operation at that temperature shall be established and checked either by testing each valve or by testing a specimen valve of each design-type.

6.8.3.2.13 The valves of demountable tanks that can be rolled shall be provided with protective caps.

Thermal insulation

6.8.3.2.14 If tanks intended for the carriage of liquefied gases are equipped with thermal insulation, such insulation shall consist of either:

- a sun shield covering not less than the upper third but not more than the upper half of the tank surface and separated from the shell by an air space at least 4 cm across; or

- a complete cladding, of adequate thickness, of insulating materials.

6.8.3.2.15 Tanks intended for the carriage of refrigerated liquefied gases shall be thermally insulated. Thermal insulation shall be ensured by means of a continuous sheathing. If the space between the shell and the sheathing is under vacuum (vacuum insulation), the protective sheathing shall be so designed as to withstand without deformation an external pressure of at least 100 kPa (1 bar) (gauge pressure). By derogation from the definition of "calculation pressure" in 1.2.1, external and internal reinforcing devices may be taken into account in the calculations. If the sheathing is so closed as to be gas-tight, a device shall be provided to prevent any dangerous pressure from developing in the insulating layer in the event of inadequate gas-tightness of the shell or of its items of equipment. The device shall prevent the infiltration of moisture into the heat-insulating sheath.

6.8.3.2.16 Tanks intended for the carriage of liquefied gases having a boiling point below -182° C at atmospheric pressure shall not include any combustible material either in the thermal insulation or in the means of attachment.

The means of attachment for vacuum insulated tanks may, with the approval of the competent authority, contain plastics substances between the shell and the sheathing.

6.8.3.2.17 By derogation from the requirements of 6.8.2.2.4 shells intended for the carriage of refrigerated liquefied gases need not have an inspection opening.

Items of equipment for battery-vehicles and MEGCs

6.8.3.2.18 Service and structural equipment shall be configured or designed to prevent damage that could result in the release of the pressure receptacle contents during normal conditions of handling and carriage. When the connection between the frame of the battery-vehicle or MEGC and the elements allows relative movement between the sub-assemblies, the equipment shall be so fastened as to permit such movement without damage to working parts. Manifold piping leading to shut-off valves shall be sufficiently flexible to protect the valves and the piping from shearing, or releasing the pressure receptacle contents. The filling and discharge devices (including flanges or threaded plugs) and any protective caps shall be capable of being secured against unintended opening.

6.8.3.2.19 In order to avoid any loss of content in the event of damage, the manifolds, the discharge fittings (pipe sockets, shut-off devices), and the stop-valves shall be protected or arranged from being wrenched off by external forces or designed to withstand them.

6.8.3.2.20 The manifold shall be designed for service in a temperature range of -20° C to +50° C.

The manifold shall be designed, constructed and installed so as to avoid the risk of damage due to thermal expansion and contraction, mechanical shock and vibration. All piping shall be of suitable metallic material. Welded pipe joints shall be used wherever possible.

Joints in copper tubing shall be brazed or have an equally strong metal union. The melting point of brazing materials shall be no lower than 525ºC. The joints shall not decrease the strength of tubing as may happen when cutting threads.

6.8.3.2.21 Except for UN No.1001 acetylene, dissolved, the permissible maximum stress σ of the manifolding arrangement at the test pressure of the receptacles shall not exceed 75% of the guaranteed yield strength of the material.

The necessary wall thickness of the manifolding arrangement for the carriage of UN No.1001 acetylene, dissolved shall be calculated according to an approved code of practice.

NOTE: *For the yield strength, see 6.8.2.1.11.*

The basic requirements of this paragraph shall be deemed to have been complied with if the following standards are applied: *(Reserved)*.

6.8.3.2.22 By derogation from the requirements of 6.8.3.2.3, 6.8.3.2.4 and 6.8.3.2.7, for cylinders, tubes, pressure drums and bundles of cylinders (frames) forming a battery-vehicle or MEGC, the required closing devices may be provided for within the manifolding arrangement.

6.8.3.2.23 If one of the elements is equipped with a safety valve and shut-off devices are provided between the elements, every element shall be so equipped.

6.8.3.2.24 The filling and discharge devices may be affixed to a manifold.

6.8.3.2.25 Each element, including each individual cylinder of a bundle, intended for the carriage of toxic gases, shall be capable of being isolated by a shut-off valve.

6.8.3.2.26 Battery-vehicles or MEGCs intended for the carriage of toxic gases shall not have safety valves, unless the safety valves are preceded by a bursting disc. In the latter case, the arrangement of the bursting disc and safety valve shall be satisfactory to the competent authority.

6.8.3.2.27 When battery-vehicles or MEGCs are intended for carriage by sea, the requirements of 6.8.3.2.26 shall not prohibit the fitting of safety valves conforming to the IMDG Code.

6.8.3.2.28 Receptacles which are elements of a battery-vehicle or MEGC intended for the carriage of flammable gases shall be combined in groups of not more than 5 000 litres which are capable of being isolated by a shut-off valve.

Each element of a battery-vehicle or MEGC intended for the carriage of flammable gases, when consisting of tanks conforming to this Chapter, shall be capable of being isolated by a shut-off valve.

6.8.3.3 ***Type approval***

No special requirements.

6.8.3.4 ***Inspections and tests***

6.8.3.4.1 The materials of every welded shell with the exception of cylinders, tubes, pressure drums and cylinders as part of bundles of cylinders which are elements of a battery-vehicle or of a MEGC shall be tested according to the method described in 6.8.5.

6.8.3.4.2 The basic requirements for the test pressure are given in 4.3.3.2.1 to 4.3.3.2.4 and the minimum test pressures are given in the table of gases and gas mixtures in 4.3.3.2.5.

6.8.3.4.3 The first hydraulic pressure test shall be carried out before thermal insulation is placed in position. When the shell, its fittings, piping and items of equipment have been tested separately, the tank shall be subjected to a leakproofness test after assembly.

6.8.3.4.4 The capacity of each shell intended for the carriage of compressed gases filled by mass, liquefied gases or dissolved gases shall be determined, under the supervision of an expert approved by the competent authority, by weighing or volumetric measurement of the quantity of water which fills the shell; the measurement of shell capacity shall be accurate to within 1%. Determination by a calculation based on the dimensions of the shell is not permitted. The maximum filling masses allowed in accordance with packing instruction P200 or P203 in 4.1.4.1 as well as 4.3.3.2.2 and 4.3.3.2.3 shall be prescribed by an approved expert.

6.8.3.4.5 Checking of the welds shall be carried out in accordance with the λ=1 requirements of 6.8.2.1.23.

6.8.3.4.6 By derogation from the requirements of 6.8.2.4, the periodic inspections, including the hydraulic pressure test, shall take place:

a) Every 3 years | Every 2½ years

in the case of tanks intended for the carriage of UN No.1008 boron trifluoride, UN No. 1017 chlorine, UN No. 1048 hydrogen bromide, anhydrous, UN No. 1050 hydrogen chloride, anhydrous, UN No. 1053 hydrogen sulphide, UN No. 1067 dinitrogen tetroxide (nitrogen dioxide), UN No. 1076 phosgene or UN No. 1079 sulphur dioxide;

b) After 6 years | After 8 years

of service and thereafter every 12 years in the case of tanks intended for the carriage of refrigerated liquefied gases.

A leakproofness test shall be performed by an approved expert 6 years after each periodic inspection.	A leakproofness test may be performed, at the request of the competent authority, between any two successive inspections.

When the shell, its fittings, piping and items of equipment have been tested separately, the tank shall be subjected to a leakproofness test after assembly.

6.8.3.4.7 In the case of vacuum-insulated tanks, the hydraulic-pressure test and the check of the internal condition may, with the consent of the approved expert, be replaced by a leakproofness test and measurement of the vacuum.

6.8.3.4.8 If, at the time of periodic inspections, openings have been made in shells intended for the carriage of refrigerated liquefied gases, the method by which they are hermetically closed before the shells are returned to service shall be approved by the approved expert and shall ensure the integrity of the shell.

6.8.3.4.9 Leakproofness tests of tanks intended for the carriage of gases shall be performed at a pressure of not less than:

– For compressed gases, liquefied gases and dissolved gases: 20% of the test pressure;

– For refrigerated liquefied gases: 90% of the maximum working pressure.

Inspections and tests for battery-vehicles and MEGCs

6.8.3.4.10 The elements and items of equipment of each battery-vehicle or MEGC shall be inspected and tested either together or separately before being put into service for the first time (initial inspection and test). Thereafter battery-vehicles or MEGCs the elements of which are receptacles shall be inspected at not more than five-year intervals. Battery-vehicles and MEGCs the elements of which are tanks shall be inspected according to 6.8.3.4.6. An exceptional inspection and test shall be performed regardless of the last periodic inspection and test when necessary according to 6.8.3.4.14.

6.8.3.4.11 The initial inspection shall include:

- a check of conformity to the approved type;
- a check of the design characteristics;
- an examination of the internal and external conditions;
- a hydraulic pressure test [9] at the test pressure indicated on the plate prescribed in 6.8.3.5.10;
- a leakproofness test at the maximum working pressure; and
- a check of satisfactory operation of the equipment.

When the elements and their fittings have been pressure-tested separately, they shall be subjected together after assembly to a leakproofness test.

6.8.3.4.12 Cylinders, tubes and pressure drums and cylinders as part of bundles of cylinders shall be tested according to packing instruction P200 or P203 in 4.1.4.1.

The test pressure of the manifold of the battery-vehicle or MEGC shall be the same as that of the elements of the battery-vehicle or MEGC. The pressure test of the manifold may be performed as a hydraulic test or by using another liquid or gas with the agreement of the competent authority or its authorised body. By derogation from this requirement, the test pressure for the manifold of battery-vehicle or MEGC shall not be less than 300 bar for UN No. 1001 acetylene, dissolved.

6.8.3.4.13 The periodic inspection shall include a leakproofness test at the maximum working pressure and an external examination of the structure, the elements and the service equipment without disassembling. The elements and the piping shall be tested at the periodicity defined in packing instruction P200 of 4.1.4.1 and in accordance with the requirements of 6.2.1.6. When the elements and equipment have been pressure-tested separately, they shall be subjected together after assembly to a leakproofness test.

6.8.3.4.14 An exceptional inspection and test is necessary when the battery-vehicle or MEGC shows evidence of damaged or corroded areas, or leakage, or any other conditions, that indicate a deficiency that could affect the integrity of the battery-vehicle or MEGC. The extent of the exceptional inspection and test and, if deemed necessary, the disassembling of elements shall depend on the amount of damage or deterioration of the battery-vehicle or MEGC. It shall include at least the examinations required under 6.8.3.4.15.

---

[9] *In special cases and with the agreement of the expert approved by the competent authority, the hydraulic pressure test may be replaced by a pressure test using another liquid or gas, where such an operation does not present any danger.*

6.8.3.4.15 The examinations shall ensure that:

(a) the elements are inspected externally for pitting, corrosion, or abrasions, dents, distortions, defects in welds or any other conditions, including leakage, that might render the battery-vehicles or MEGCs unsafe for transport;

(b) the piping, valves, and gaskets are inspected for corroded areas, defects, and other conditions, including leakage, that might render battery-vehicles or MEGCs unsafe for filling, discharge or transport;

(c) missing or loose bolts or nuts on any flanged connection or blank flange are replaced or tightened;

(d) all emergency devices and valves are free from corrosion, distortion and any damage or defect that could prevent their normal operation. Remote closure devices and self-closing stop-valves shall be operated to demonstrate proper operation;

(e) required markings on the battery-vehicles or MEGCs are legible and in accordance with the applicable requirements; and

(f) any framework, supports and arrangements for lifting the battery-vehicles or MEGCs are in satisfactory condition.

6.8.3.4.16 The tests, inspections and checks in accordance with 6.8.3.4.10 to 6.8.3.4.15 shall be carried out by the expert approved by the competent authority. Certificates shall be issued showing the results of these operations.

These certificates shall refer to the list of the substances permitted for carriage in this battery-vehicle or MEGC in accordance with 6.8.2.3.1.

6.8.3.5 ***Marking***

6.8.3.5.1 The following additional particulars shall be marked by stamping or by any other similar method on the plate prescribed in 6.8.2.5.1, or directly on the walls of the shell itself if the walls are so reinforced that the strength of the tank is not impaired.

6.8.3.5.2 On tanks intended for the carriage of only one substance:

- the proper shipping name of the gas and, in addition for gases classified under an n.o.s. entry, the technical name [14];

[14] *Instead of the proper shipping name or, if applicable, of the proper shipping name of the n.o.s. entry followed by the technical name, the use of the following names is permitted:*

- *for UN No. 1078 refrigerant gas, n.o.s: mixture F1, mixture F2, mixture F3;*
- *for UN No. 1060 methylacetylene and propadiene mixtures, stabilized: mixture P1, mixture P2;*
- *for UN No. 1965 hydrocarbon gas mixture, liquefied, n.o.s: mixture A, mixture A01, mixture A02, mixture A0, mixture A1, mixture B1, mixture B2, mixture B, mixture C. The names customary in the trade and mentioned in 2.2.2.3, Classification code 2F, UN No. 1965, Note 1 may be used only as a complement;*
- *for UN No. 1010 Butadienes, stabilized: 1,2-Butadiene, stabilized, 1,3-Butadiene, stabilized.*

This indication shall be supplemented:

- in the case of tanks intended for the carriage of compressed gases filled by volume (pressure), by an indication of the maximum filling pressure at 15 °C permitted for the tank; and
- in the case of tanks intended for the carriage of compressed gases filled by mass, and of liquefied gases, refrigerated liquefied gases or dissolved gases by an indication of the maximum permissible load mass in kg and of the filling temperature if below –20 °C.

6.8.3.5.3 On multipurpose tanks:

- the proper shipping names of the gases and, in addition for gases classified under an n.o.s. entry, the technical name of the gases [14] for whose carriage the tank is approved.

These particulars shall be supplemented by an indication of the maximum permissible load mass in kg for each gas.

6.8.3.5.4 On tanks intended for the carriage of refrigerated liquefied gases:

- the maximum working pressure allowed.

6.8.3.5.5 On tanks equipped with thermal insulation:

- the inscription "thermally insulated" or "thermally insulated by vacuum".

6.8.3.5.6 In addition to the particulars prescribed in 6.8.2.5.2, the following shall be inscribed on

the tank itself or on a plate:	the tank-container itself or on a plate:
(a) - the tank code according to the certificate (see 6.8.2.3.1) with the actual test pressure of the tank;	
- the inscription: "minimum filling temperature allowed :…";	
(b) where the tank is intended for the carriage of one substance only:	
- the proper shipping name of the gas and, in addition for gases classified under an n.o.s. entry, the technical name [14];	
	- for compressed gases which are filled by mass, and for liquefied gases, refrigerated liquefied gases or dissolved gases, the maximum permissible load mass in kg;

[14] *Instead of the proper shipping name or, if applicable, of the proper shipping name of the n.o.s. entry followed by the technical name, the use of the following names is permitted:*

- *for UN No. 1078 refrigerant gas, n.o.s: mixture F1, mixture F2, mixture F3;*
- *for UN No. 1060 methylacetylene and propadiene mixtures, stabilized: mixture P1, mixture P2;*
- *for UN No. 1965 hydrocarbon gas mixture, liquefied, n.o.s: mixture A, mixture A01, mixture A02, mixture A0, mixture A1, mixture B1, mixture B2, mixture B, mixture C. The names customary in the trade and mentioned in 2.2.2.3, Classification code 2F, UN No. 1965, Note 1 may be used only as a complement;*
- *for UN No. 1010 Butadienes, stabilized: 1,2-Butadiene, stabilized, 1,3-Butadiene, stabilized.*

(c) where the tank is a multipurpose tank:

- the proper shipping name of the gas and, for gases classified under an n.o.s. entry, the technical name [14] of all gases to whose carriage the tank is assigned

with an indication of the maximum permissible load mass in kg for each of them;

(d) where the shell is equipped with thermal insulation:

- the inscription "thermally insulated" (or "thermally insulated by vacuum"), in an official language of the country of registration and also, if that language is not English, French or German, in English, French or German, unless any agreements concluded between the countries concerned in the transport operation provide otherwise.

6.8.3.5.7 (Reserved)

6.8.3.5.8 These particulars shall not be required in the case of a vehicle carrying demountable tanks.

6.8.3.5.9 (Reserved)

Marking of battery-vehicles and MEGCs

6.8.3.5.10 Every battery-vehicle and every MEGC shall be fitted with a corrosion-resistant metal plate permanently attached in a place readily accessible for inspection. The following particulars at least shall be marked on the plate by stamping or by any other similar method [12]

- approval number;
- manufacturer's name or mark;
- manufacturer's serial number;
- year of manufacture;
- test pressure (gauge pressure)
- design temperature (only if above +50 °C or below -20 °C);
- date (month and year) of initial test and most recent periodic test in accordance with 6.8.3.4.10 to 6.8.3.4.13;
- stamp of the expert who carried out the tests.

---

[12] *Add the units of measurements after the numerical values.*

[14] *Instead of the proper shipping name or, if applicable, of the proper shipping name of the n.o.s. entry followed by the technical name, the use of the following names is permitted:*

- *for UN No. 1078 refrigerant gas, n.o.s: mixture F1, mixture F2, mixture F3;*
- *for UN No. 1060 methylacetylene and propadiene mixtures, stabilized: mixture P1, mixture P2;*
- *for UN No. 1965 hydrocarbon gas mixture, liquefied, n.o.s: mixture A, mixture A01, mixture A02, mixture A0, mixture A1, mixture B1, mixture B2, mixture B, mixture C. The names customary in the trade and mentioned in 2.2.2.3, Classification code 2F, UN No. 1965, Note 1 may be used only as a complement*
- *for UN No. 1010 Butadienes, stabilized: 1,2-Butadiene, stabilized, 1,3-Butadiene, stabilized.*

6.8.3.5.11	The following particulars shall be inscribed on the battery-vehicle itself or on a plate [12]: - names of owner or of operator; - number of elements; - total capacity of the elements; and for battery-vehicles filled by mass: - unladen mass; - maximum permissible mass.	The following particulars shall be inscribed either on the MEGC itself or on a plate [12]: - names of owner and of operator; - number of elements; - total capacity of the elements; - maximum permissible laden mass; - the tank code according to the certificate of approval (see 6.8.2.3.1) with the actual test pressure of the MEGC; - the proper shipping name of the gases, and in addition, for gases classified under an n.o.s. entry, the technical name[14] of the gases for whose carriage the MEGC is used; and for MEGCs filled by mass: - tare.

6.8.3.5.12 The frame of a battery-vehicle or MEGC shall bear near the filling point a plate specifying:

- the maximum filling pressure [12] at 15 °C allowed for elements intended for compressed gases;
- the proper shipping name of the gas in accordance with Chapter 3.2 and, in addition for gases classified under an n.o.s. entry, the technical name [14];

and, in addition, in the case of liquefied gases:

- the permissible maximum load per element[12].

6.8.3.5.13 Cylinders, tubes and pressure drums, and cylinders as part of bundles of cylinders, shall be marked according to 6.2.1.7. These receptacles need not be labelled individually with the danger labels as required in Chapter 5.2.

Battery-vehicles and MEGCs shall be placarded and marked according to Chapter 5.3.

---

[12] *Add the units of measurements after the numerical values.*

[14] *Instead of the proper shipping name or, if applicable, of the proper shipping name of the n.o.s. entry followed by the technical name, the use of the following names is permitted:*

- *for UN No. 1078 refrigerant gas, n.o.s: mixture F1, mixture F2, mixture F3;*
- *for UN No. 1060 methylacetylene and propadiene mixtures, stabilized: mixture P1, mixture P2;*
- *for UN No. 1965 hydrocarbon gas mixture, liquefied, n.o.s: mixture A, mixture A01, mixture A02, mixture A0, mixture A1, mixture B1, mixture B2, mixture B, mixture C. The names customary in the trade and mentioned in 2.2.2.3, Classification code 2F, UN No. 1965, Note 1 may be used only as a complement;*
- *for UN No. 1010 Butadienes, stabilized: 1,2-Butadiene, stabilized, 1,3-Butadiene, stabilized.*

6.8.3.6 ***Requirements for battery-vehicles and MEGCs which are designed, constructed and tested according to standards***

NOTE: *Persons or bodies identified in standards as having responsibilities in accordance with ADR shall meet the requirements of ADR.*

The requirements of Chapter 6.8 are considered to have been complied with if the following standard is applied:

Applicable sub-sections and paragraphs	Reference	Title of document
6.8.3.1.4 and 6.8.3.1.5, 6.8.3.2.18 to 6.8.3.2.26, 6.8.3.4.10 to 6.8.3.4.12 and 6.8.3.5.10 to 6.8.3.5.13	EN 13807: 2003	Transportable gas cylinders - Battery vehicles - Design, manufacture, identification and testing

6.8.3.7 ***Requirements for battery-vehicles and MEGCs which are not designed, constructed and tested according to standards***

Battery-vehicles and MEGCs which are not designed, constructed and tested in accordance with the standards set out in 6.8.3.6 shall be designed, constructed and tested in accordance with the requirements of a technical code recognized by the competent authority. They shall, however, comply with the minimum requirements of 6.8.3.

6.8.4 **Special provisions**

NOTE 1: *For liquids having a flash-point of not more than 61 °C and for flammable gases, see also 6.8.2.1.26, 6.8.2.1.27 and 6.8.2.2.9.*

NOTE 2: *For requirements for tanks subjected to a pressure test of not less than 1 MPa (10 bar) or for tanks intended for the carriage of refrigerated liquefied gases, see 6.8.5.*

When they are shown under an entry in Column (13) of Table A of Chapter 3.2, the following special provisions apply:

(a) **Construction (TC)**

TC1 The requirements of 6.8.5 are applicable to the materials and construction of these shells.

TC2 Shells, and their items of equipment, shall be made of aluminium not less than 99.5% pure or of suitable steel not liable to cause hydrogen peroxide to decompose. Where shells are made of aluminium not less than 99.5% pure, the wall thickness need not exceed 15 mm, even where calculation in accordance with 6.8.2.1.17 gives a higher value.

TC3 The shells shall be made of austenitic steel.

TC4 Shells shall be provided with an enamel or equivalent protective lining if the material of the shell is attacked by UN No. 3250 chloroacetic acid.

TC5 Shells shall be provided with a lead lining not less than 5 mm thick or an equivalent lining.

TC6 Where the use of aluminium is necessary for tanks, such tanks shall be made of aluminium not less than 99.5% pure; the wall thickness need not exceed 15 mm even where calculation in accordance with 6.8.2.1.17 gives a higher value.

TC7 The effective minimum thickness of the shell shall not be less than 3 mm.

(b) **Items of equipment (TE)**

TE1 *(Reserved)*

TE2 (*Reserved*)

TE3 Tanks shall in addition meet the following requirements. The heating device shall not penetrate into, but shall be exterior to the shell. However, a pipe used for extracting the phosphorus may be equipped with a heating jacket. The device heating the jacket shall be so regulated as to prevent the temperature of the phosphorus from exceeding the filling temperature of the shell. Other piping shall enter the shell in its upper part; openings shall be situated above the highest permissible level of the phosphorus and be capable of being completely enclosed under lockable caps. The tank shall be equipped with a gauging system for verifying the level of the phosphorus and, if water is used as a protective agent, with a fixed gauge mark showing the highest permissible level of the water.

TE4 Shells shall be equipped with thermal insulation made of materials which are not readily flammable.

TE5 If shells are equipped with thermal insulation, such insulation shall be made of materials which are not readily flammable.

TE6 Tanks may be equipped with a device of a design which precludes its obstruction by the substance carried and which prevents leakage and the build-up of excess overpressure or underpressure inside the shell.

TE7 The shell-discharge system shall be equipped with two mutually independent shut-off devices mounted in series, the first taking the form of a quick-closing internal stop-valve of an approved type and the second that of an external stop-valve, one at each end of the discharge pipe. A blank flange, or another device providing the same measure of security, shall also be fitted at the outlet of each external stop-valve. The internal stop-valve shall be such that if the pipe is wrenched off the stop-valve will remain integral with the shell and in the closed position.

TE8 The connections to the external pipe-sockets of tanks shall be made of materials not liable to cause decomposition of hydrogen peroxide.

TE9 Tanks shall be fitted in their upper part with a shut-off device preventing any build-up of excess pressure inside the shell due to the decomposition of the substances carried, any leakage of liquid, and any entry of foreign matter into the shell.

TE10 The shut-off devices of tanks shall be so designed as to preclude obstruction of the devices by the solidified substance during carriage. Where tanks are sheathed in thermally-insulating material, the material shall be of an inorganic nature and entirely free from combustible matter.

TE11 Shells and their service equipment shall be so designed as to prevent the entry of foreign matter, leakage of liquid or any building up of dangerous excess pressure inside the shell due to the decomposition of the substances carried.

TE12 Tanks shall be equipped with thermal insulation complying with the requirements of 6.8.3.2.14. If the SADT of the organic peroxide in the tank is 55 °C or less, or the tank is constructed of aluminium, the shell shall be completely insulated. The sun shield and any part of the tank not covered by it, or the outer sheathing of a complete lagging, shall be painted white or finished in bright metal. The paint shall be cleaned before each transport journey and renewed in case of yellowing or deterioration. The thermal insulation shall be free from combustible matter. Tanks shall be fitted with temperature sensing devices.

Tanks shall be fitted with safety valves and emergency pressure-relief devices. Vacuum-relief devices may also be used. Emergency pressure-relief devices shall operate at pressures determined according to both the properties of the organic peroxide and the construction characteristics of the tank. Fusible elements shall not be permitted in the body of the shell.

Tanks shall be fitted with spring-loaded safety valves to prevent significant pressure build-up within the shell of the decomposition products and vapours released at a temperature of 50 °C. The capacity and start-to-discharge pressure of the safety-valve(s) shall be based on the results of the tests specified in special provision TA2. The start-to-discharge pressure shall however in no case be such that liquid could escape from the valve(s) if the tank were overturned.

The emergency-relief devices may be of the spring-loaded or frangible types designed to vent all the decomposition products and vapours evolved during a period of not less than one hour of complete fire-engulfment as calculated by the following formula:

$$q = 70961 \times F \times A^{0.82}$$

where:

q = heat absorption [W]
A = wetted area [m^2]
F = insulation factor

F = 1 for non-insulated tanks, or

$$F = \frac{U\,(923 - T_{P0})}{47032} \text{ for insulated tanks}$$

where:

K = heat conductivity of insulation layer [$W \cdot m^{-1} \cdot K^{-1}$]
L = thickness of insulation layer [m]
U = K/L = heat transfer coefficient of the insulation [$W \cdot m^{-2} \cdot K^{-1}$]
T_{PO} = temperature of peroxide at relieving conditions [K]

The start-to-discharge pressure of the emergency-relief device(s) shall be higher than that above specified and based on the results of the tests referred to in special provision TA2. The emergency-relief devices shall be dimensioned in such a way that the maximum pressure in the tank never exceeds the test pressure of the tank.

NOTE: *An example of a method to determine the size of emergency-relief devices is given in Appendix 5 of the Manual of Tests and Criteria.*

For tanks equipped with thermal insulation consisting of a complete cladding, the capacity and setting of the emergency-relief device(s) shall be determined assuming a loss of insulation from 1% of the surface area.

Vacuum-relief devices and spring-loaded safety valves of tanks shall be provided with flame arresters unless the substances to be carried and their decomposition products are non-combustible. Due attention shall be paid to the reduction of the relief capacity caused by the flame arrester.

TE13 Tanks shall be thermally insulated and fitted with a heating device on the outside.

TE14 Tanks shall be equipped with thermal insulation. The thermal insulation directly in contact with the shell shall have an ignition temperature at least 50 °C higher than the maximum temperature for which the tank was designed.

TE15 Tanks fitted with vacuum valves which open at a negative pressure of not less than 21 kPa (0.21 bar) shall be considered as being hermetically closed. For tanks intended for the carriage of solid substances (powdery or granular) of packing groups II or III only, which do not liquefy during transport, the negative pressure may be reduced to not less than 5 kPa (0.05 bar).

TE16 *(Reserved)*

TE17 *(Reserved)*

TE18 Tanks intended for the carriage of substances filled at a temperature higher than 190 ºC shall be equipped with deflectors placed at right angles to the upper filling openings, so as to avoid a sudden localized increase in wall temperature during filling.

TE19 Fittings and accessories mounted in the upper part of the tank shall be either:

- inserted in a recessed housing; or
- equipped with an internal safety valve; or
- shielded by a cap, or by transverse and/or longitudinal members, or by other equally effective devices, so profiled that in the event of overturning the fittings and accessories will not be damaged.

Fittings and accessories mounted in the lower part of the tank:

Pipe-sockets, lateral shut-off devices, and all discharge devices shall either be recessed by at least 200 mm from the extreme outer edge of the tank or be protected by a rail having a coefficient of inertia of not less than 20 cm^3 transversally to the direction of travel; their ground clearance shall be not less than 300 mm with the tank full.

Fittings and accessories mounted on the rear face of the tank shall be protected by the bumper prescribed in 9.7.6. Their height above the ground shall be such that they are adequately protected by the bumper

TE20 Notwithstanding the other tank-codes which are permitted in the hierarchy of tanks of the rationalized approach in 4.3.4.1.2, tanks shall be equipped with a safety valve.

TE21 The closures shall be protected with lockable caps.

TE22 *(Reserved)*

TE23 Tanks shall be equipped with a device of a design which precludes its obstruction by the substance carried and which prevents leakage and the build-up of excess overpressure or underpressure inside the shell.

TE24 If tanks, intended for the carriage and handling of bitumen, are equipped with a spray bar at the end of the discharge pipe, the closing device, as required by 6.8.2.2.2, may be replaced by a shut-off valve, situated on the discharge pipe and preceding the spray bar.

(c) **Type approval (TA)**

TA1 Tanks shall not be approved for the carriage of organic substances.

TA2 This substance may be carried in fixed or demountable tanks or tank-containers under the conditions laid down by the competent authority of the country of origin, if, on the basis of the tests mentioned below, the competent authority is satisfied that such a transport operation can be carried out safely. If the country of origin is not party to ADR, these conditions shall be recognized by the competent authority of the first ADR country reached by the consignment.

For the type approval tests shall be undertaken:

- to prove the compatibility of all materials normally in contact with the substance during carriage;
- to provide data to facilitate the design of the emergency pressure-relief devices and safety valves taking into account the design characteristics of the tank; and
- to establish any special requirements necessary for the safe carriage of the substance.

The test results shall be included in the report for the type approval.

TA3 This substance may be carried only in tanks with the tank code LGAV or SGAV; the hierarchy in 4.3.4.1.2 is not applicable.

(d) **Tests (TT)**

TT1 Tanks of pure aluminium need to be subjected to the initial and periodic hydraulic pressure tests at a pressure of only 250 kPa (2.5 bar) (gauge pressure).

TT2 The condition of the lining of shells shall be inspected every year by an expert approved by the competent authority, who shall inspect the inside of the shell.

TT3 By derogation from the requirements of 6.8.2.4.2, periodic inspections shall take place at least every eight years and shall include a thickness check using suitable instruments. For such tanks, the leakproofness test and check for which provision is made in 6.8.2.4.3 shall be carried out at least every four years.

TT4 *(Reserved)*

TT5 The hydraulic pressure tests shall take place at least every

3 years.	2½ years.

TT6 The periodic tests, including the hydraulic pressure test, shall be carried out at least every 3 years.

TT7 Notwithstanding the requirements of 6.8.2.4.2, the periodic internal inspection may be replaced by a programme approved by the competent authority.

TT8 Tanks approved for the carriage of UN 1005 AMMONIA, ANHYDROUS and constructed of fine-grained steel with a yield strength of more than 400 N/mm2 in accordance with the material standard, shall be subjected at each periodic test according to 6.8.2.4.2, to magnetic particle inspections to detect surface cracking.

For the lower part of each shell at least 20% of the length of each circumferential and longitudinal weld shall, together with all nozzle welds and any repair or ground areas, be inspected.

(e) **Marking (TM)**

NOTE: *These particulars shall be in an official language of the country of approval, and also, if that language is not English, French or German, in English, French or German, unless any agreements concluded between the countries concerned in the transport operation provide otherwise.*

TM1 Tanks shall bear in addition to the particulars prescribed in 6.8.2.5.2, the words: "**Do not open during carriage. Liable to spontaneous combustion**" (see also the Note above).

TM2 Tanks shall bear in addition to the particulars prescribed in 6.8.2.5.2, the words: "**Do not open during carriage. Gives off flammable gases on contact with water**" (see also the Note above).

TM3 Tanks shall also bear, on the plate prescribed in 6.8.2.5.1, the proper shipping names of the approved substances and the maximum permissible load of the tank in kg.

TM4 For tanks the following additional particulars shall be marked by stamping or by any other similar method on the plate prescribed in 6.8.2.5.2 or directly on the shell itself, if the walls are so reinforced that the strength of the tank is not impaired: the chemical name with the approved concentration of the substance concerned.

TM5 Tanks shall bear, in addition to the particulars referred to in 6.8.2.5.1 the date (month, year) of the most recent inspection of the internal condition of the shell.

TM6 *(Reserved)*

TM7 The trefoil symbol, as described in 5.2.1.7.6, shall be marked by stamping or any other equivalent method on the plate described in 6.8.2.5.1. This trefoil may be engraved directly on the walls of the shell itself, if the walls are so reinforced that the strength of the shell is not impaired.

6.8.5 Requirements concerning the materials and construction of fixed welded tanks, demountable welded tanks, and welded shells of tank-containers for which a test pressure of not less than 1 MPa (10 bar) is required, and of fixed welded tanks, demountable welded tanks and welded shells of tank-containers intended for the carriage of refrigerated liquefied gases of Class 2

6.8.5.1 ***Materials and shells***

6.8.5.1.1 (a) Shells intended for the carriage of :

- compressed, liquefied gases or dissolved gases of Class 2;
- UN Nos. 1366, 1370, 1380, 2005, 2445, 2845, 2870, 3051, 3052, 3053, 3076, 3194, 3391 to 3394 and 3433 of Class 4.2; and
- UN No. 1052 hydrogen fluoride, anhydrous and UN No.1790 hydrofluoric acid with more than 85% hydrogen fluoride of Class 8

shall be made of steel;

(b) Shells constructed of fine-grained steels for the carriage of:

- corrosive gases of Class 2 and UN No. 2073 ammonia solution; and
- UN No. 1052 hydrogen fluoride, anhydrous and UN No.1790 hydrofluoric acid with more than 85% hydrogen fluoride of Class 8

shall be heat-treated for thermal stress relief;

(c) Shells intended for the carriage of refrigerated liquefied gases of Class 2, shall be made of steel, aluminium, aluminium alloy, copper or copper alloy (e.g. brass). However, shells made of copper or copper alloy shall be allowed only for gases containing no acetylene; ethylene, however, may contain not more than 0.005% acetylene;

(d) Only materials appropriate to the lowest and highest working temperatures of the shells and of their fittings and accessories may be used.

6.8.5.1.2 The following materials shall be allowed for the manufacture of shells:

(a) steels not subject to brittle fracture at the lowest working temperature (see 6.8.5.2.1):

- mild steels (except for refrigerated liquefied gases of Class 2);
- fine-grained steels, down to a temperature of -60 ºC;
- nickel steels (with a nickel content of 0.5 to 9%), down to a temperature of –196 ºC, depending on the nickel content;
- austenitic chrome-nickel steels, down to a temperature of -270 ºC;

(b) aluminium not less than 99.5% pure or aluminium alloys (see 6.8.5.2.2);

(c) deoxidized copper not less than 99.9% pure, or copper alloys having a copper content of over 56% (see 6.8.5.2.3).

6.8.5.1.3 (a) Shells made of steel, aluminium or aluminium alloys shall be either seamless or welded;

(b) Shells made of austenitic steel, copper or copper alloy may be hard-soldered.

6.8.5.1.4 The fittings and accessories may either be screwed to the shells or be secured thereto as follows:

(a) shells made of steel, aluminium or aluminium alloy: by welding;

(b) shells made of austenitic steel, of copper or of copper alloy: by welding or hard-soldering.

6.8.5.1.5 The construction of shells and their attachment to the vehicle, to the underframe or in the container frame shall be such as to preclude with certainty any such reduction in the temperature of the load-bearing components as would be likely to render them brittle. The means of attachment of shells shall themselves be so designed that even when the shell is at its lowest working temperature they still possess the necessary mechanical properties.

6.8.5.2 ***Test requirements***

6.8.5.2.1 *Steel shells*

The materials used for the manufacture of shells and the weld beads shall, at their lowest working temperature, but at least at -20 ºC, meet at least the following requirements as to impact strength:

- The tests shall be carried out with test-pieces having a V-shaped notch;

- The minimum impact strength (see 6.8.5.3.1 to 6.8.5.3.3) for test-pieces with the longitudinal axis at right angles to the direction of rolling and a V-shaped notch (conforming to ISO R 148) perpendicular to the plate surface, shall be 34 J/cm^2 for mild steel (which, because of existing ISO standards, may be tested with test-pieces having the longitudinal axis in the direction of rolling); fine-grained steel; ferritic alloy steel Ni < 5%, ferritic alloy steel 5% # Ni # 9%; or austenitic Cr - Ni steel;

- In the case of austenitic steels, only the weld bead need be subjected to an impact-strength test;

- For working temperatures below -196ºC the impact-strength test is not performed at the lowest working temperature, but at -196 ºC.

6.8.5.2.2 *Shells made of aluminium or aluminium alloy*

The seams of shells shall meet the requirements laid down by the competent authority.

6.8.5.2.3 *Shells made of copper or copper alloy*

It is not necessary to carry out tests to determine whether the impact strength is adequate.

6.8.5.3 ***Impact-strength tests***

6.8.5.3.1 For sheets less than 10 mm but not less than 5 mm thick, test-pieces having a cross-section of 10 mm × e mm, where "e" represents the thickness of the sheet, shall be used. Machining to 7.5 mm or 5 mm is permitted if it is necessary. The minimum value of 34 J/cm^2 shall be required in every case.

***NOTE**: No impact-strength test shall be carried out on sheets less than 5 mm thick, or on their weld seams.*

6.8.5.3.2 (a) For the purpose of testing sheets, the impact strength shall be determined on three test-pieces. Test-pieces shall be taken at right angles to the direction of rolling; however, for mild steel they may be taken in the direction of rolling.

(b) For testing weld seams the test-pieces shall be taken as follows:

when e #10 mm:

three test-pieces with the notch at the centre of the weld;

three test-pieces with the notch in the centre of the heat affected zone (the V-notch to cross the fusion boundary at the centre of the specimen);

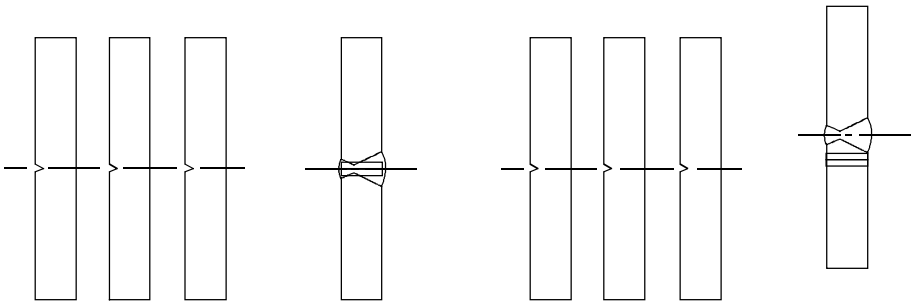

Center of the weld Heat affected zone

when 10 mm < e ≤ 20 mm:

three test-pieces from the centre of the weld;

three test-pieces from the heat affected zone (the V-notch to cross the fusion boundary at the centre of the specimen);

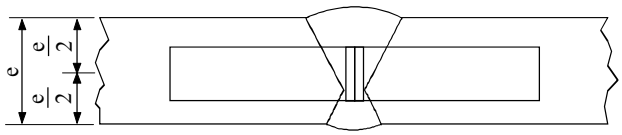

Center of the weld

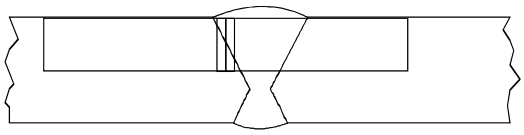

Heat affected zone

when e > 20 mm

two sets of three test-pieces, one set on the upper face, one set on the lower face at each of the points indicated below (the V-notch to cross the fusion boundary at the centre of the specimen for those taken from the heat affected zone)

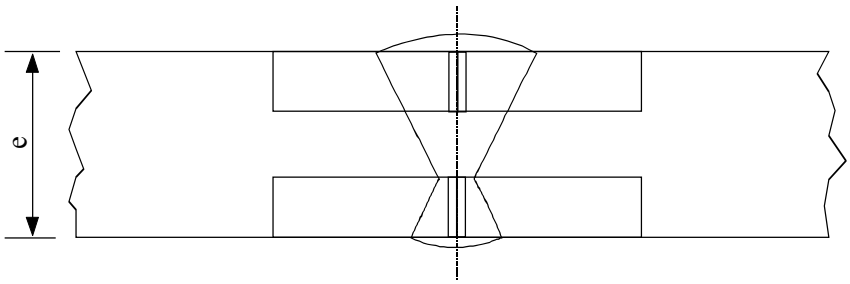

Center of the weld

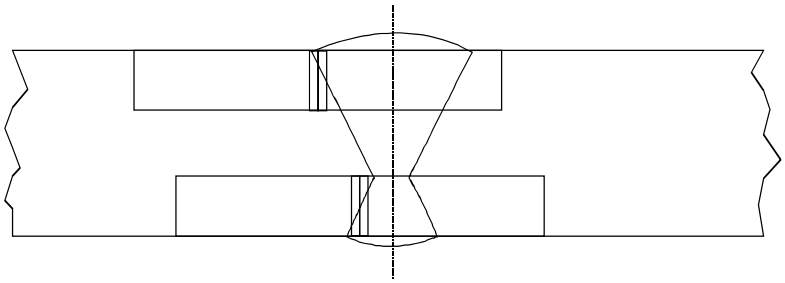

Heat affected zone

6.8.5.3.3 (a) For sheets, the average of the three tests shall meet the minimum value of 34 J/cm^2 indicated in 6.8.5.2.1; not more than one of the individual values may be below the minimum value and then not below 24 J/cm^2;

(b) For welds, the average value obtained from the three test-pieces taken at the centre of the weld shall not be below the minimum value of 34 J/cm^2; not more than one of the individual values may be below the minimum value and then not below 24 J/cm^2;

(c) For the heat affected zone (the V-notch to cross the fusion boundary at the centre of the specimen) the value obtained from not more than one of the three test-pieces may be below the minimum value of 34 J/cm^2, though not below 24 J/cm^2.

6.8.5.3.4 If the requirements prescribed in 6.8.5.3.3 are not met, one retest only may be done if:

(a) the average value of the first three tests is below the minimum value of 34 J/cm^2; or

(b) more than one of the individual values is less than the minimum value of 34 J/cm^2 but not below 24 J/cm^2.

6.8.5.3.5 In a repeated impact test on sheets or welds, none of the individual values may be below 34 J/cm^2. The average value of all the results of the original test and of the retest should be equal to or more than the minimum of 34 J/cm^2.

On a repeated impact strength test on the heat-affected zone, none of the individual values may be below 34 J/cm^2.

6.8.5.4 ***Reference to standards***

The requirements of 6.8.5.2 and 6.8.5.3 shall be deemed to have been complied with if the following relevant standards have been applied:

EN 1252-1:1998 Cryogenic vessels - Materials - Part 1: Toughness requirements for temperature below - 80 °C.

EN 1252-2: 2001 Cryogenic vessels - Materials - Part 2: Toughness requirements for temperature between - 80 °C and - 20 °C.

CHAPTER 6.9

REQUIREMENTS FOR THE DESIGN, CONSTRUCTION, EQUIPMENT, TYPE APPROVAL, TESTING AND MARKING OF FIBRE-REINFORCED PLASTICS (FRP) FIXED TANKS (TANK-VEHICLES), DEMOUNTABLE TANKS, TANK-CONTAINERS AND TANK SWAP BODIES

***NOTE**: For portable tanks and UN multiple-element gas containers (MEGCs) see Chapter 6.7; for fixed tanks (tank-vehicles), demountable tanks and tank-containers and tank swap bodies, with shells made of metallic materials, and battery-vehicles and multiple element gas containers (MEGCs) other than UN MEGCs see Chapter 6.8; for vacuum operated waste tanks see Chapter 6.10.*

6.9.1 General

6.9.1.1 FRP tanks shall be designed, manufactured and tested in accordance with a quality assurance programme recognized by the competent authority; in particular, lamination work and welding of thermoplastic liners shall only be carried out by qualified personnel in accordance with a procedure recognized by the competent authority.

6.9.1.2 For the design and testing of FRP tanks, the provisions of 6.8.2.1.1, 6.8.2.1.7, 6.8.2.1.13, 6.8.2.1.14 (a) and (b), 6.8.2.1.25, 6.8.2.1.27, 6.8.2.1.28 and 6.8.2.2.3 shall also apply.

6.9.1.3 Heating elements shall not be used for FRP tanks.

6.9.1.4 For the stability of tank-vehicles, the requirements of 9.7.5.1 shall apply.

6.9.2 Construction

6.9.2.1 Shells shall be made of suitable materials, which shall be compatible with the substances to be carried in a service temperature range of between -40°C and +50°C, unless temperature ranges are specified for specific climatic conditions by the competent authority of the country where the transport operation is performed.

6.9.2.2 Shells shall consist of the following three elements :

- internal liner,
- structural layer,
- external layer.

6.9.2.2.1 The internal liner is the inner shell wall zone designed as the primary barrier to provide for the long-term chemical resistance in relation to the substances to be carried, to prevent any dangerous reaction with the contents or the formation of dangerous compounds and any substantial weakening of the structural layer owing to the diffusion of products through the internal liner.

The internal liner may either be a FRP liner or a thermoplastic liner.

6.9.2.2.2 FRP liners shall consist of:

(a) surface layer ("gel-coat"): adequate resin rich surface layer, reinforced with a veil, compatible with the resin and contents. This layer shall have a fibre mass content of not more than 30% and have a thickness between 0.25 and 0.60 mm;

(b) strengthening layer(s): layer or several layers with a minimum thickness of 2 mm, containing a minimum of 900 g/m² of glass mat or chopped fibres with a mass content in glass of not less than 30% unless equivalent safety is demonstrated for a lower glass content.

6.9.2.2.3 Thermoplastic liners shall consist of thermoplastic sheet material as referred to in 6.9.2.3.4, welded together in the required shape, to which the structural layers are bonded. Durable bonding between liners and the structural layer shall be achieved by the use of an appropriate adhesive.

***NOTE**: For the carriage of flammable liquids the internal layer may require additional measures in accordance with 6.9.2.14, in order to prevent the accumulation of electrical charges.*

6.9.2.2.4 The structural layer of the shell is the zone specially designed according to 6.9.2.4 to 6.9.2.6 to withstand the mechanical stresses. This part normally consists of several fibre reinforced layers in determined orientations.

6.9.2.2.5 The external layer is the part of the shell which is directly exposed to the atmosphere. It shall consist of a resin rich layer with a thickness of at least 0.2 mm. For a thickness larger than 0.5 mm, a mat shall be used. This layer shall have a mass content in glass of less than 30% and shall be capable of withstanding exterior conditions, in particular the occasional contact with the substance to be carried. The resin shall contain fillers or additives to provide protection against deterioration of the structural layer of the shell by ultra-violet radiation.

6.9.2.3 *Raw materials*

6.9.2.3.1 All materials used for the manufacture of FRP tanks shall be of known origin and specifications.

6.9.2.3.2 *Resins*

The processing of the resin mixture shall be carried out in strict compliance with the recommendations of the supplier. This concerns mainly the use of hardeners, initiators and accelerators. These resins can be:

- unsaturated polyester resins;
- vinyl ester resins;
- epoxy resins;
- phenolic resins.

The heat distortion temperature (HDT) of the resin, determined in accordance with ISO 75-1:1993 shall be at least 20°C higher than the maximum service temperature of the tank, but shall in any case not be lower than 70 °C.

6.9.2.3.3 *Reinforcement fibres*

The reinforcement material of the structural layers shall be a suitable grade of fibres such as glass fibres of type E or ECR according to ISO 2078:1993. For the internal surface liner, glass fibres of type C according to ISO 2078:1993 may be used. Thermoplastic veils may only be used for the internal liner when their compatibility with the intended contents has been demonstrated.

6.9.2.3.4 *Thermoplastic liner material*

Thermoplastic liners, such as unplastified polyvinyl chloride (PVC-U), polypropylene (PP), polyvinylidene fluoride (PVDF), polytetrafluoroethylene (PTFE), etc. may be used as lining materials.

6.9.2.3.5 *Additives*

Additives necessary for the treatment of the resin, such as catalysts, accelerators, hardeners and thixotropic substances as well as materials used to improve the tank, such as fillers, colours, pigments etc. shall not cause weakening of the material, taking into account lifetime and temperature expectancy of the design.

6.9.2.4 Shells, their attachments and their service and structural equipment shall be designed to withstand without loss of contents (other than quantities of gas escaping through any degassing vents) during the design lifetime:

- the static and dynamic loads in normal conditions of carriage;

- the prescribed minimum loads as defined in 6.9.2.5 to 6.9.2.10.

6.9.2.5 At the pressures as indicated in 6.8.2.1.14 (a) and (b), and under the static gravity forces caused by the contents with maximum density specified for the design and at maximum filling degree, the design stress σ in longitudinal and circumferential direction of any layer of the shell shall not exceed the following value:

$$\sigma \leq \frac{R_m}{K}$$

where:

R_m = the value of tensile strength given by taking the mean value of the test results minus twice the standard deviation of the test results. The tests shall be carried out, in accordance with the requirements of EN 61:1977, on not less than six samples representative of the design type and construction method;

K = $S \times K_0 \times K_1 \times K_2 \times K_3$

where

K shall have a minimum value of 4, and

S = the safety coefficient. For the general design, if the tanks are referred to in Column (12) of Table A of Chapter 3.2 by a tank code including the letter "G" in its second part (see 4.3.4.1.1), the value for S shall be equal to or more than 1.5. For tanks intended for the carriage of substances which require an increased safety level, i.e. if the tanks are referred to in Column (12) of Table A of Chapter 3.2 by a tank code including the number "4" in its second part (see 4.3.4.1.1), the value

of S shall be multiplied by a factor of two, unless the shell is provided with protection against damage consisting of a complete metal skeleton including longitudinal and transverse structural members;

K_0 = a factor related to the deterioration in the material properties due to creep and ageing and as a result of the chemical action of the substances to be carried. It shall be determined by the formula:

$$K_o = \frac{1}{\alpha\beta}$$

where "α" is the creep factor and "β" is the ageing factor determined in accordance with EN 978:1997 after performance of the test according to EN 977:1997. Alternatively, a conservative value of $K_0 = 2$ may be applied. In order to determine α and β the initial deflection shall correspond to 2σ;

K_1 = a factor related to the service temperature and the thermal properties of the resin, determined by the following equation, with a minimum value of 1:

$$K_1 = 1.25 - 0.0125\ (HDT - 70)$$

where HDT is the heat distortion temperature of the resin, in ºC;

K_2 = a factor related to the fatigue of the material; the value of $K_2 = 1.75$ shall be used unless otherwise agreed with the competent authority. For the dynamic design as outlined in 6.9.2.6 the value of $K_2 = 1.1$ shall be used;

K_3 = a factor related to curing and has the following values:

- 1.1 where curing is carried out in accordance with an approved and documented process;
- 1.5 in other cases.

6.9.2.6 At the dynamic stresses, as indicated in 6.8.2.1.2 the design stress shall not exceed the value specified in 6.9.2.5, divided by the factor α.

6.9.2.7 At any of the stresses as defined in 6.9.2.5 and 6.9.2.6, the resulting elongation in any direction shall not exceed 0.2% or one tenth of the elongation at fracture of the resin, whichever is lower.

6.9.2.8 At the specified test pressure, which shall not be less than the relevant calculation pressure as specified in 6.8.2.1.14 (a) and (b) the maximum strain in the shell shall not be greater than the elongation at fracture of the resin.

6.9.2.9 The shell shall be capable of withstanding the ball drop test according to 6.9.4.3.3 without any visible internal or external defects.

6.9.2.10 The overlay laminates used in the joints, including the end joints, the joints of the surge plates and the partitions with the shell shall be capable of withstanding the static and dynamic stresses mentioned above. In order to avoid concentrations of stresses in the overlay lamination, the applied tapper shall not be steeper than 1:6.

The shear strength between the overlay laminate and the tank components to which it is bonded shall not be less than:

$$\tau = \frac{Q}{l} \leq \frac{\tau_R}{K}$$

where:

τ_R is the bending shear strength according to EN 63:1977 with a minimum of $\tau_R = 10\ N/mm^2$, if no measured values are available;

Q is the load per unit width that the joint shall carry under the static and dynamic loads;

K is the factor calculated in accordance with 6.9.2.5 for the static and dynamic stresses;

l is the length of the overlay laminate.

6.9.2.11 Openings in the shell shall be reinforced to provide at least the same safety factors against the static and dynamic stresses as specified in 6.9.2.5 and 6.9.2.6 as that for the shell itself. The number of openings shall be minimized. The axis ratio of oval-shaped openings shall be not more than 2.

6.9.2.12 For the design of flanges and pipework attached to the shell, handling forces and the fastening of bolts shall also be taken into account.

6.9.2.13 The tank shall be designed to withstand, without significant leakage, the effects of a full engulfment in fire for 30 minutes as specified by the test requirements in 6.9.4.3.4. Testing may be waived with the agreement of the competent authority, where sufficient proof can be provided by tests with comparable tank designs.

6.9.2.14 ***Special requirements for the transport of substances with a flash-point of not more than 61 °C***

FRP tanks used for the carriage of substances with a flash-point of not more than 61°C shall be constructed so as to ensure the elimination of static electricity from the various component parts so as to avoid the accumulation of dangerous charges.

6.9.2.14.1 The electrical surface resistance of the inside and outside of the shell as established by measurements shall not be higher than 10^9 ohms. This may be achieved by the use of additives in the resin or interlaminate conducting sheets, such as metal or carbon network.

6.9.2.14.2 The discharge resistance to earth as established by measurements shall not be higher than 10^7 ohms.

6.9.2.14.3 All components of the shell shall be electrically connected to each other and to the metal parts of the service and structural equipment of the tank and to the vehicle. The electrical resistance between components and equipment in contact with each other shall not exceed 10 ohms.

6.9.2.14.4 The electrical surface-resistance and discharge resistance shall be measured initially on each manufactured tank or a specimen of the shell in accordance with a procedure recognized by the competent authority.

6.9.2.14.5 The discharge resistance to earth of each tank shall be measured as part of the periodic inspection in accordance with a procedure recognized by the competent authority.

6.9.3 Items of equipment

6.9.3.1 The requirements of 6.8.2.2.1, 6.8.2.2.2 and 6.8.2.2.4 to 6.8.2.2.8 shall apply.

6.9.3.2 In addition, when they are shown under an entry in Column (13) of Table A of Chapter 3.2, the special provisions of 6.8.4 (b) (TE) shall also apply.

6.9.4 Type testing and approval

6.9.4.1 For any design of a FRP tank type, its materials and a representative prototype shall be subjected to the design type testing as outlined below.

6.9.4.2 ***Material testing***

6.9.4.2.1 The elongation at fracture according to EN 61:1977 and the heat distortion temperature according to ISO 75-1:1993 shall be determined for the resins to be used.

6.9.4.2.2 The following characteristics shall be determined for samples cut out of the shell. Samples manufactured in parallel may only be used, if it is not possible to use cutouts from the shell. Prior to testing, any liner shall be removed.

The tests shall cover:

- Thickness of the laminates of the central shell wall and the ends;

- Mass content and composition of glass, orientation and arrangement of reinforcement layers;

- Tensile strength, elongation at fracture and modulus of elasticity according to EN 61:1977 in the direction of stresses. In addition, the elongation at fracture of the resin shall be established by means of ultrasound;

- Bending strength and deflection established by the bending creep test according to EN 63:1977 for a period of 1000 hours using a sample with a minimum width of 50 mm and a support distance of at least 20 times the wall thickness. In addition, the creep factor α and the ageing factor β shall be determined by this test and according to EN 978:1997.

6.9.4.2.3 The interlaminate shear strength of the joints shall be measured by testing representative samples in the tensile test according to EN 61:1977.

6.9.4.2.4 The chemical compatibility of the shell with the substances to be carried shall be demonstrated by one of the following methods with the agreement of the competent authority. This demonstration shall account for all aspects of the compatibility of the materials of the shell and its equipment with the substances to be carried, including chemical deterioration of the shell, initiation of critical reactions of the contents and dangerous reactions between both.

- In order to establish any deterioration of the shell, representative samples taken from the shell, including any internal liners with welds, shall be subjected to the chemical compatibility test according to EN 977:1997 for a period of 1 000 hours at 50°C. Compared with a virgin sample, the loss of strength and elasticity modulus measured by the bending test according to EN 978:1997 shall not exceed 25%. Cracks, bubbles, pitting effects as well as separation of layers and liners and roughness shall not be acceptable.

- Certified and documented data of positive experiences on the compatibility of the filling substances in question with the materials of the shell with which they come into contact at given temperatures, times and any other relevant service conditions.

- Technical data published in relevant literature, standards or other sources, acceptable to the competent authority.

6.9.4.3 ***Type testing***

A representative prototype tank shall be subjected to tests as specified below. For this purpose service equipment may be replaced by other items if necessary.

6.9.4.3.1 The prototype shall be inspected for compliance with the design type specification. This shall include an internal and external visual inspection and measurement of the main dimensions.

6.9.4.3.2 The prototype, equipped with strain gauges at all locations where a comparison with the design calculation is required, shall be subjected to the following loads and the strains shall be recorded:

- Filled with water to the maximum filling degree. The measuring results shall be used to calibrate the design calculation according to 6.9.2.5;

- Filled with water to the maximum filling degree and subjected to accelerations in all three directions by means of driving and braking exercises with the prototype attached to a vehicle. For comparison with the design calculation according to 6.9.2.6 the strains recorded shall be extrapolated in relation to the quotient of the accelerations required in 6.8.2.1.2 and measured;

- Filled with water and subjected to the specified test pressure. Under this load, the shell shall exhibit no visual damage or leakage.

6.9.4.3.3 The prototype shall be subjected to the ball drop test according to EN 976-1:1997, No. 6.6. No visible damage inside or outside the tank shall occur.

6.9.4.3.4 The prototype with its service and structural equipment in place and filled to 80% of its maximum capacity with water, shall be exposed to a full engulfment in fire for 30 minutes, caused by an open heating oil pool fire or any other type of fire with the same effect. The dimensions of the pool shall exceed those of the tank by at least 50 cm to each side and the distance between fuel level and tank shall be between 50 cm and 80 cm. The rest of the tank below liquid level, including openings and closures, shall remain leakproof except for drips.

6.9.4.4 ***Type approval***

6.9.4.4.1 The competent authority or a body designated by that authority shall issue in respect of each new type of tank an approval attesting that the design is suitable for the purpose for which it is intended and meets the construction and equipment requirements of this chapter as well as the special provisions applicable to the substances to be carried.

6.9.4.4.2 The approval shall be based on the calculation and the test report, including all material and prototype test results and its comparison with the design calculation, and shall refer to the design type specification and the quality assurance programme.

6.9.4.4.3 The approval shall include the substances or group of substances for which compatibility with the shell is provided. Their chemical names or the corresponding collective entry (see 2.1.1.2), and their class and classification code shall be indicated.

6.9.4.4.4 In addition, it shall include design and threshold values (such as life-time, service temperature range, working and test pressures, material data) specified and all precautions to be taken for the manufacture, testing, type approval, marking and use of any tank, manufactured in accordance with the approved design type.

6.9.5 Inspections

6.9.5.1 For every tank, manufactured in conformity with the approved design, material tests and inspections shall be performed as specified below.

6.9.5.1.1 The material tests according to 6.9.4.2.2, except for the tensile test and for a reduction of the testing time for the bending creep test to 100 hours shall be performed with samples taken from the shell. Samples manufactured in parallel may only be used, if no cutouts from the shell are possible. The approved design values shall be met.

6.9.5.1.2 Shells and their equipment shall either together or separately undergo an initial inspection before being put into service. This inspection shall include:

- a check of conformity to the approved design;
- a check of the design characteristics;
- an internal and external examination;
- a hydraulic pressure test at the test pressure indicated on the plate prescribed in 6.8.2.5.1;
- a check of operation of the equipment;
- a leakproofness test, if the shell and its equipment have been pressure tested separately.

6.9.5.2 For the periodic inspection of tanks the requirements of 6.8.2.4.2 to 6.8.2.4.4 shall apply. In addition, the inspection in accordance with 6.8.2.4.3 shall include an examination of the internal condition of the shell.

6.9.5.3 The inspections and tests in accordance with 6.9.5.1 and 6.9.5.2 shall be carried out by the expert approved by the competent authority. Certificates shall be issued showing the results of these operations. These certificates shall refer to the list of the substances permitted for carriage in this shell in accordance with 6.9.4.4.

6.9.6 Marking

6.9.6.1 The requirements of 6.8.2.5 shall apply to the marking of FRP tanks, with the following amendments:

- the tank plate may also be laminated to the shell or be made of suitable plastics materials;
- the design temperature range shall always be marked.

6.9.6.2 In addition, when they are shown under an entry in Column (13) of Table A of Chapter 3.2, the special provisions of 6.8.4 (e) (TM) shall also apply.

CHAPTER 6.10

REQUIREMENTS FOR THE CONSTRUCTION, EQUIPMENT, TYPE APPROVAL, INSPECTION AND MARKING OF VACUUM-OPERATED WASTE TANKS

NOTE 1: *For portable tanks and UN multiple-element gas containers (MEGCs) see Chapter 6.7; for fixed tanks (tank-vehicles), demountable tanks and tank containers and tank swap bodies, with shells made of metallic materials, and battery-vehicles and multiple element gas containers (MEGCs) other than UN MEGCs see Chapter 6.8; for fibre-reinforced plastic tanks see Chapter 6.9.*

NOTE 2: *This Chapter applies to fixed tanks, demountable tanks, tank-containers and tank swap bodies.*

6.10.1 General

6.10.1.1 *Definition*

NOTE: *A tank which fully complies with the requirements of Chapter 6.8 is not considered to be a "vacuum-operated waste tank".*

6.10.1.1.1 The term "*protected area*" means the areas located as follows:

(a) The lower part of the tank in a zone which extends over a 60° angle on either side of the lower generating line;

(b) The top part of the tank in a zone which extends over a 30° angle on either side of the top generating line;

(c) On the end front of the tank on motor vehicles;

(d) On the rear end of the tank inside the protection volume formed by the device stipulated in 9.7.6.

6.10.1.2 *Scope*

6.10.1.2.1 The special requirements of 6.10.2 to 6.10.4 complete or modify Chapter 6.8 and are applied to vacuum-operated waste tanks.

Vacuum-operated waste tanks may be equipped with openable ends, if the requirements of Chapter 4.3 allow bottom discharge of the substances to be carried (indicated by letters "A" or "B" in Part 3 of the tank code given in Column (12) of Table A of Chapter 3.2, in accordance with 4.3.4.1.1).

Vacuum-operated waste tanks shall comply with all requirements of Chapter 6.8, with the exception of requirements overtaken by a special provision in this Chapter. However the requirements of 6.8.2.1.19, 6.8.2.1.20, and 6.8.2.1.21 shall not apply.

6.10.2 Construction

6.10.2.1 Tanks shall be designed for a calculation pressure equal to 1.3 times the filling or discharge pressure but not less than 400 kPa (4 bar) (gauge pressure). For the carriage of substances for which a higher calculation pressure of the tank is specified in Chapter 6.8, this higher pressure shall apply.

6.10.2.2 Tanks shall be designed to withstand a negative internal pressure of 100 kPa (1 bar).

6.10.3 Items of equipment

6.10.3.1 The items of equipment shall be so arranged as to be protected against the risk of being wrenched off or damaged during carriage or handling. This requirement can be fulfilled by placing the items of equipment in a so called "protected area" (see 6.10.1.1.1).

6.10.3.2 The bottom discharge of shells may be constituted by external piping with a stop-valve fitted as close to the shell as practicable and a second closure which may be a blank flange or other equivalent device.

6.10.3.3 The position and closing direction of the stop-valve(s) connected to the shell, or to any compartment in the case of compartmented shells, shall be unambiguous, and be able to be checked from the ground.

6.10.3.4 In order to avoid any loss of contents in the event of damage to the external filling and discharge fittings (pipes, lateral shut-off devices), the internal stop-valve, or the first external stop-valve (where applicable), and its seatings shall be protected against the danger of being wrenched off by external stresses or shall be so designed as to withstand them. The filling and discharge devices (including flanges or threaded plugs) and protective caps (if any) shall be capable of being secured against any unintended opening.

6.10.3.5 The tanks may be equipped with openable ends. Openable ends shall comply with the following conditions:

(a) The ends shall be designed to be secured leaktight when closed;

(b) Unintentional opening shall not be possible;

(c) Where the opening mechanism is power operated the end shall remain securely closed in the event of a power failure;

(d) A safety or breakseal device shall be incorporated to ensure that the openable end cannot be opened when there is still a residual over pressure in the tank. This requirement does not apply to openable ends which are power-operated, where the movement is positively controlled. In this case the controls shall be of the dead-man type and be so positioned that the operator can observe the movement of the openable end at all times and is not endangered during opening and closing of the openable end; and

(e) Provisions shall be made to protect the openable end and prevent it from being forced open during a roll-over of the vehicle, tank-container or tank swap body.

6.10.3.6 Vacuum-operated waste tanks which are fitted with an internal piston to assist in the cleaning of the tank or discharging shall be provided with stop-devices to prevent the piston in every operational position being ejected from the tank when a force equivalent to the maximum working pressure of the tank is applied to the piston. The maximum working pressure for tanks or compartments with pneumatic operated piston shall not exceed 100 kPa (1.0 bar). The internal piston shall be constructed in a manner and of materials which will not cause an ignition source when the piston is moved.

The internal piston may be used as a compartment provided it is secured in position. Where any of the means by which the internal piston is secured is external to the tank, it shall be placed in a position not liable to accidental damage.

6.10.3.7 The tanks may be equipped with suction booms if:

(a) the boom is fitted with an internal or external stop-valve fixed directly to the shell, or directly to a bend that is welded to the shell;

(b) the stop-valve mentioned in (a) is so arranged that carriage with the valve in an open position is prevented; and

(c) the boom is constructed in such a way that the tank will not leak as a result of accidental impact on the boom.

6.10.3.8 The tanks shall be fitted with the following additional service equipment:

(a) The outlet of a pump/exhauster unit shall be so arranged as to ensure that any flammable or toxic vapours are diverted to a place where they will not cause a danger;

(b) A device to prevent immediate passage of flame shall be fitted to both the inlet and outlet of a vacuum pump/exhauster unit which may create sparks and which is fitted on a tank used for the carriage of flammable wastes;

(c) Pumps which can deliver a positive pressure shall have a safety device fitted in the pipework which can be pressurised. The safety device shall be set to discharge at a pressure not exceeding the maximum working pressure of the tank;

(d) A stop-valve shall be fitted between the shell, or the outlet of the overfill prevention device fitted to the shell, and the pipework connecting the shell to the pump/exhauster unit;

(e) The tank shall be fitted with a suitable pressure/vacuum manometer which shall be mounted in a position where it can be easily read by the person operating the pump/exhauster unit. A distinguishing line shall be marked on the scale to indicate the maximum working pressure of the tank;

(f) The tank, or in case of compartmented tanks, every compartment, shall be equipped with a level indicating device. Sight glasses may be used as level indicating devices provided:

(i) they form a part of the tank wall and have a resistance to the pressure comparable to that of the tank; or they are fitted external to the tank;

(ii) the top and bottom connections to the tank are equipped with shut-off valves fixed directly to the shell and so arranged that carriage with the valves in an open position is prevented;

(iii) are suitable for operation at the maximum working pressure of the tank; and

(iv) are placed in a position where they will not be liable to accidental damage.

6.10.3.9 The shells of vacuum-operated waste tanks shall be fitted with a safety valve preceded by a bursting disc.

The valve shall be capable of opening automatically at a pressure between 0.9 and 1.0 times the test pressure of the tank to which it is fitted. The use of dead weight or counterweight valves is prohibited.

The bursting disc shall burst at the earliest when the initial opening pressure of the valve is reached and at the latest when this pressure reaches the test pressure of the tank to which it is fitted.

Safety devices shall be of such a type as to resist dynamic stresses, including liquid surge.

The space between the bursting disc and the safety valve shall be provided with a pressure gauge or suitable tell-tale indicator for the detection of disc rupture, pinholing or leakage wich could cause a malfunction of the safety valve.

6.10.4 Inspection

Vacuum-operated waste tanks shall be subject every three years for fixed tanks or demountable tanks and at least every two and a half years for tank-containers and tank swap bodies to an examination of the internal condition, in addition to the tests according to 6.8.2.4.3.

CHAPTER 6.11

REQUIREMENTS FOR THE DESIGN, CONSTRUCTION, INSPECTION AND TESTING OF BULK CONTAINERS

6.11.1 Definitions

For the purposes of this section:

Closed bulk container means a totally closed bulk container having a rigid roof, sidewalls, end walls and floor (including hopper-type bottoms). The term includes bulk containers with an opening roof, side or end wall that can be closed during carriage. Closed bulk containers may be equipped with openings to allow for the exchange of vapours and gases with air and which prevent under normal conditions of carriage the release of solid contents as well as the penetration of rain and splash water;

Sheeted bulk container means an open top bulk container with rigid bottom (including hopper-type bottom), side and end walls and a non-rigid covering;

6.11.2 Application and general requirements

6.11.2.1 Bulk containers and their service and structural equipment shall be designed and constructed to withstand, without loss of contents, the internal pressure of the contents and the stresses of normal handling and carriage.

6.11.2.2 Where a discharge valve is fitted, it shall be capable of being made secure in the closed position and the whole discharge system shall be suitably protected from damage. Valves having lever closures shall be able to be secured against unintended opening and the open or closed position shall be readily apparent.

6.11.2.3 *Code for designating types of bulk container*

The following table indicates the codes to be used for designating types of bulk containers:

Types of bulk containers	Code
Sheeted bulk container	BK1
Closed bulk container	BK2

6.11.2.4 In order to take account of progress in science and technology, the use of alternative arrangements which offer at least equivalent safety as provided by the requirements of this chapter may be considered by the competent authority.

6.11.3 Requirements for the design, construction, inspection and testing of containers conforming to the CSC used as bulk containers

6.11.3.1 *Design and construction requirements*

6.11.3.1.1 The general design and construction requirements of this sub-section are deemed to be met if the bulk container complies with the requirements of ISO 1496-4:1991 "Series 1 Freight containers- Specification and testing – Part 4: Non pressurized containers for dry bulk" and the container is siftproof.

6.11.3.1.2 Containers designed and tested in accordance with ISO 1496-1:1990 "Series 1 Freight containers- Specification and testing - Part 1: General cargo containers for general purposes" shall be equipped with operational equipment which is, including its connection to the container, designed to strengthen the end walls and to improve the longitudinal restraint as necessary to comply with the test requirements of ISO 1496-4:1991 as relevant.

6.11.3.1.3 Bulk containers shall be siftproof. Where a liner is used to make the container siftproof it shall be made of a suitable material. The strength of material used for, and the construction of, the liner shall be appropriate to the capacity of the container and its intended use. Joins and closures of the liner shall withstand pressures and impacts liable to occur under normal conditions of handling and carriage. For ventilated bulk containers any liner shall not impair the operation of ventilating devices.

6.11.3.1.4 The operational equipment of bulk containers designed to be emptied by tilting shall be capable of withstanding the total filling mass in the tilted orientation.

6.11.3.1.5 Any movable roof or side or end wall or roof section shall be fitted with locking devices with securing devices designed to show the locked state to an observer at ground level.

6.11.3.2 ***Service equipment***

6.11.3.2.1 Filling and discharge devices shall be so constructed and arranged as to be protected against the risk of being wrenched off or damaged during carriage and handling. The filling and discharge devices shall be capable of being secured against unintended opening. The open and closed position and direction of closure shall be clearly indicated.

6.11.3.2.2 Seals of openings shall be so arranged as to avoid any damage by the operation, filling and emptying of the bulk container.

6.11.3.2.3 Where ventilation is required bulk containers shall be equipped with means of air exchange, either by natural convection, e.g. by openings, or active elements, e.g. fans. The ventilation shall be designed to prevent negative pressures in the container at all times. Ventilating elements of bulk containers for the carriage of flammable substances or substances emitting flammable gases or vapours shall be designed so as not to be a source of ignition.

6.11.3.3 ***Inspection and testing***

6.11.3.3.1 Containers used, maintained and qualified as bulk containers in accordance with the requirements of this section shall be tested and approved in accordance with the CSC.

6.11.3.3.2 Containers used and qualified as bulk containers shall be inspected periodically according to the CSC.

6.11.3.4 ***Marking***

6.11.3.4.1 Containers used as bulk containers shall be marked with a Safety Approval Plate in accordance with the CSC.

6.11.4 Requirements for the design, construction and approval of bulk containers other than containers conforming to the CSC

NOTE: *When containers conforming to the provisions of this section are used for the carriage of solids in bulk, the following statement shall be shown on the transport document:*

"Bulk container BK(x) approved by the competent authority of ……". (see 5.4.1.1.17)".

6.11.4.1 Bulk containers covered in this section include skips, offshore bulk containers, bulk bins, swap bodies, trough shaped containers, roller containers, and load compartments of vehicles.

NOTE : *These bulk containers also include containers conforming to the UIC leaflets 590, 591 and 592-2 to 592-4 as mentioned in 7.1.3 which do not conform to the CSC.*

6.11.4.2 These bulk containers shall be designed and constructed so as to be strong enough to withstand the shocks and loadings normally encountered during carriage including, as applicable, transhipment between modes of transport.

6.11.4.3 *(Reserved).*

6.11.4.4 These bulk containers shall be approved by the competent authority and the approval shall include the code for designating types of bulk containers in accordance with 6.11.2.3 and the requirements for inspection and testing as appropriate.

6.11.4.5 Where it is necessary to use a liner in order to retain the dangerous goods it shall meet the provisions of 6.11.3.1.3.

PART 7

Provisions concerning the conditions of carriage, loading, unloading and handling

CHAPTER 7.1

GENERAL PROVISIONS

7.1.1 The carriage of dangerous goods is subject to the mandatory use of a particular type of carriage in accordance with the provisions of this Chapter and Chapter 7.2 for carriage in packages, Chapter 7.3 for carriage in bulk and Chapter 7.4 for carriage in tanks. In addition, the provisions of Chapter 7.5 concerning loading, unloading and handling shall be observed.

Columns (16), (17) and (18) of Table A of Chapter 3.2 show the particular provisions of this Part that apply to specific dangerous goods.

7.1.2 In addition to the provisions of this Part, vehicles used for the carriage of dangerous goods shall, as regards their design, construction and, if appropriate, their approval, conform to the relevant requirements of Part 9.

7.1.3 Large containers, portable tanks and tank-containers which meet the definition of "container" given in the CSC (1972), as amended, or in UIC leaflets[1] 590 (status at 01.01.1979, 10th edition, including amendments Nos. 1 to 4), 591 (status at 01.01.1998, 2nd edition), 592-2 (status at 01.07.1996, 5th edition), 592-3 (status at 01.01.1998, 2nd edition) and 592-4 (status at 01.07.1995, new edition) may not be used to carry dangerous goods unless the large container or the frame of the portable tank or tank-container satisfies the provisions of the CSC or of UIC leaflets 590, 591 and 592-2 to 592-4.

7.1.4 A large container may be presented for carriage only if it is structurally serviceable.

"Structurally serviceable" means that the container is free from major defects in its structural components, e.g. top and bottom side rails, doorsill and header, floor cross members, corner posts, and corner fittings. "Major defects" are dents or bends in structural members greater than 19 mm in depth, regardless of length; cracks or breaks in structural members; more than one splice or an improper splice (e.g. a lapped splice) in top or bottom end rails or door headers or more than two splices in any one top or bottom side rail or any splice in a door sill or corner post; door hinges and hardware that are seized, twisted, broken, missing or otherwise inoperative; non-closing gaskets and seals; any distortion of the overall configuration sufficient to prevent proper alignment of handling equipment, mounting and securing on a chassis or vehicle.

In addition, deterioration in any component of the container, such as rusted metal in side walls or disintegrated fibreglass is unacceptable, regardless of the material of construction. Normal wear, including oxidization (rust), slight dents and scratches and other damage that do not affect serviceability or weather-tightness are, however, acceptable.

Prior to loading the container shall also be checked to ensure that it is free from any residue of a previous load and that the interior floor and walls are free from protrusions.

7.1.5 Large containers shall meet the requirements concerning the body of the vehicle laid down in this Part and, if appropriate, those laid down in Part 9 for the load in question; the body of the vehicle need not then satisfy those provisions.

---

[1] *UIC leaflets are published by the Union Internationale des chemins de fer, Service Publications - 16, rue Jean Rey - F - 75015 Paris.*

However, large containers carried on vehicles whose platforms have insulation and heat-resistant qualities which satisfy those requirements need not then satisfy the said requirements.

This provision also applies to small containers for the carriage of explosive substances and articles of Class 1.

7.1.6 Subject to the provisions of the last part of the first sentence of 7.1.5, the fact that dangerous goods are contained in one or more containers shall not affect the conditions to be met by the vehicle by reason of the nature and quantities of the dangerous goods carried.

CHAPTER 7.2

PROVISIONS CONCERNING CARRIAGE IN PACKAGES

7.2.1 Unless otherwise provided in 7.2.2 to 7.2.4, packages may be loaded:

(a) in closed vehicles or in closed containers; or

(b) in sheeted vehicles or in sheeted containers; or

(c) in open vehicles or in open containers.

7.2.2 Packages comprising packagings made of materials sensitive to moisture shall be loaded on to closed or on to sheeted vehicles or into closed or sheeted containers.

7.2.3 *(Reserved)*

7.2.4 When they are shown under an entry in Column (16) of Table A of Chapter 3.2, the following special provisions apply:

V1 Packages shall be loaded on to closed or sheeted vehicles or into closed or sheeted containers.

V2 (1) Packages shall only be loaded on to EX/II or EX/III vehicles which satisfy the relevant requirements of Part 9. The choice of vehicle depends on the quantity to be carried, which is limited per transport unit in accordance with the provisions concerning loading (see 7.5.5.2).

(2) Trailers, except semi-trailers, which satisfy the requirements for EX/II or EX/III vehicles may be drawn by motor vehicles which do not satisfy those requirements.

For carriage in containers, see also 7.1.3 to 7.1.6.

Where substances or articles of Class 1 in quantities requiring a transport unit made up of EX/III vehicle(s) are being carried in containers to or from harbour areas, rail terminals or airports of arrival or departure as part of a multimodal journey, a transport unit made up of EX/II vehicle(s) may be used instead, provided that the containers being carried comply with the appropriate requirements of the IMDG Code, the RID or the ICAO Technical Instructions.

V3 For free-flowing powdery substances and for fireworks the floor of a container shall have a non-metallic surface or covering.

V4 *(Reserved)*

V5 Packages may not be carried in small containers.

V6 Flexible IBCs shall be carried in closed vehicles or in closed containers, in sheeted vehicles or in sheeted containers. The sheet shall be of an impermeable and non-combustible material.

V7 *(Reserved)*

V8 (1) Substances stabilized by temperature control shall be forwarded in such manner that the control temperatures indicated in 2.2.41.1.17 and 2.2.41.4 or in 2.2.52.1.16 and 2.2.52.4, as appropriate, are never exceeded.

(2) The means of temperature control chosen for the transport operation depends on a number of factors such as:

- the control temperature(s) of the substance(s) to be carried;
- the difference between the control temperature and the expected ambient temperature;
- the effectiveness of the thermal insulation;
- the duration of the transport operation; and
- the safety margin to be allowed for delays en route.

(3) Suitable methods to prevent the control temperature from being exceeded are listed below, in ascending order of effectiveness:

R1 Thermal insulation, provided that the initial temperature of the substance(s) is sufficiently below the control temperature;

R2 Thermal insulation and coolant system, provided that:

- an adequate quantity of non-flammable coolant (e.g. liquid nitrogen or solid carbon dioxide), allowing a reasonable margin for possible delay, is carried or a means of replenishment is assured;
- liquid oxygen or air is not used as coolant;
- there is a uniform cooling effect even when most of the coolant has been consumed; and
- the need to ventilate the transport unit before entering is clearly indicated by a warning on the door(s);

R3 Thermal insulation and single mechanical refrigeration, provided that for substances with a flash-point lower than the sum of the emergency temperature plus 5 °C explosion-proof electrical fittings, EEx IIB T3, are used within the cooling compartment to prevent ignition of flammable vapours from the substances;

R4 Thermal insulation and combined mechanical refrigeration system and coolant system, provided that:

- the two systems are independent of one another; and
- the requirements of methods R2 and R3 above are met;

R5 Thermal insulation and dual mechanical refrigeration system, provided that:

- apart from the integral power supply unit, the two systems are independent of one another;

- each system alone is capable of maintaining adequate temperature control; and

- for substances with a flash-point lower than the sum of the emergency temperature plus 5 °C explosion-proof electrical fittings, EEx IIB T3, are used within the cooling compartment to prevent ignition of flammable vapours from the substances.

(4) Methods R4 and R5 may be used for all organic peroxides and self-reactive substances.

Method R3 may be used for organic peroxides and self-reactive substances of Types C, D, E and F and, when the maximum ambient temperature to be expected during carriage does not exceed the control temperature by more than 10 °C, for organic peroxides and self-reactive substances of Type B.

Method R2 may be used for organic peroxides and self-reactive substances of Types C, D, E and F when the maximum ambient temperature to be expected during carriage does not exceed the control temperature by more than 30 °C.

Method R1 may be used for organic peroxides and self-reactive substances of Types C, D, E and F when the maximum ambient temperature to be expected during carriage is at least 10 °C below the control temperature.

(5) Where substances are required to be carried in insulated, refrigerated or mechanically-refrigerated vehicles or containers, these vehicles or containers shall satisfy the requirements of Chapter 9.6.

(6) If substances are contained in protective packagings filled with a coolant, they shall be loaded in closed or sheeted vehicles or closed or sheeted containers. If the vehicles or containers used are closed they shall be adequately ventilated. Sheeted vehicles and containers shall be fitted with sideboards and a tailboard. The sheets of these vehicles and containers shall be of an impermeable and non-combustible material.

(7) Any control and temperature sensing devices in the refrigeration system shall be readily accessible and all electrical connections shall be weatherproof. The temperature of the air inside the transport unit shall be measured by two independent sensors and the output shall be recorded so that any change in temperature is readily detectable. When substances having a control temperature of less than +25 °C are carried, the transport unit shall be equipped with visible and audible alarms, powered independently of the refrigeration system and set to operate at or below the control temperature.

(8) A back-up refrigeration system or spare parts shall be available.

NOTE: *This provision V8 does not apply to substances referred to in 3.1.2.6 when substances are stabilized by the addition of chemical inhibitors such that the SADT is greater than 50 °C. In this latter case, temperature control may be required under conditions of carriage where the temperature may exceed 55 °C.*

V9 (*Reserved*)

V10 IBCs shall be carried in closed or sheeted vehicles or closed or sheeted containers.

V11 IBCs other than metal or rigid plastics IBCs shall be carried in closed or sheeted vehicles or closed or sheeted containers.

V12 IBCs of type 31HZ2 shall be carried in closed vehicles or containers.

V13 When packed in 5H1, 5L1 or 5 M1 bags, shall be carried in closed vehicles or containers.

CHAPTER 7.3

PROVISIONS CONCERNING CARRIAGE IN BULK

7.3.1 General provisions

7.3.1.1 Goods may not be carried in bulk in vehicles or containers unless:

(a) either a special provision, identified by the code BK, explicitly authorizing this mode of carriage is indicated in column (10) of Table A of Chapter 3.2 and the relevant conditions of 7.3.2 are satisfied in addition to those of this section; or

(b) a special provision, identified by the code VV, explicitly authorizing this mode of carriage is indicated in column (17) of Table A of Chapter 3.2 and the conditions of this special provision, as laid down in 7.3.3 are satisfied in addition to those of this section.

Nevertheless, empty packagings, uncleaned, may be carried in bulk if this mode of carriage is not explicitly prohibited by other provisions of ADR.

***NOTE**: For carriage in tanks, see Chapters 4.2 and 4.3.*

7.3.1.2 Substances which may become liquid at temperatures likely to be encountered during carriage, are not permitted for carriage in bulk.

7.3.1.3 Containers or bodies of vehicles shall be siftproof and shall be so closed that none of the contents can escape under normal conditions of carriage including the effect of vibration, or by changes of temperature, humidity or pressure.

7.3.1.4 Bulk solids shall be loaded and evenly distributed in a manner that minimises movement that could result in damage to the container or vehicle or leakage of the dangerous goods.

7.3.1.5 Where venting devices are fitted they shall be kept clear and operable.

7.3.1.6 Bulk solids shall not react dangerously with the material of the container, vehicle, gaskets, equipment including lids and tarpaulins and with protective coatings which are in contact with the contents or significantly weaken them. Containers or vehicles shall be so constructed or adapted that the goods cannot penetrate between wooden floor coverings or come into contact with those parts of the container or vehicle that may be affected by the materials or residues thereof.

7.3.1.7 Before being filled and offered for carriage, each container or vehicle shall be inspected and cleaned to ensure that it does not contain any residue on the interior or exterior of the container or vehicle that could:

- cause a dangerous reaction with the substance intended for carriage;
- detrimentally affect the structural integrity of the container or vehicle; or
- affect the dangerous goods retention capabilities of the container or vehicle.

7.3.1.8 During carriage, no dangerous residues shall adhere to the outer surfaces of containers or of the bodies of vehicles.

7.3.1.9 If several closure systems are fitted in series, the system which is located nearest to the substance to be carried shall be closed first before filling.

7.3.1.10 Empty containers or vehicles which have carried a dangerous solid substance in bulk shall be treated in the same manner as is required by ADR for a filled container or vehicle, unless adequate measures have been taken to nullify any hazard.

7.3.1.11 If containers or vehicles are used for the carriage in bulk of goods liable to cause a dust explosion, or evolve flammable vapours (e. g. for certain wastes) measures shall be taken to exclude sources of ignition and prevent dangerous electrostatic discharge during carriage, filling or discharge of the substance.

7.3.1.12 Substances, for example wastes, which may react dangerously with one another and substances of different classes and goods not subject to ADR, which are liable to react dangerously with one another shall not be mixed together in the same container or vehicle. Dangerous reactions are:

(a) combustion and/or evolution of considerable heat;

(b) emission of flammable and/or toxic gases;

(c) formation of corrosive liquids; or

(d) formation of unstable substances.

7.3.1.13 Before a container or vehicle is filled it shall be visually examined to ensure it is structurally serviceable, its interior walls, ceiling and floors are free from protrusions or damage and that any inner liners or substance retaining equipment are free from rips, tears or any damage that would compromise its cargo retention capabilities. Structurally serviceable means the container or vehicle does not have major defects in its structural components, such as top and bottom side rails, top and bottom end rails, door sill and header, floor cross members, corner posts, and corner fittings in a container. Major defects include:

(a) bends, cracks or breaks in the structural or supporting members that affect the integrity of the container or of the body of the vehicle;

(b) more than one splice or an improper splice (such as a lapped splice) in top or bottom end rails or door headers;

(c) more than two splices in any one top or bottom side rail;

(d) any splice in a door sill or corner post;

(e) door hinges and hardware that are seized, twisted, broken, missing, or otherwise inoperative;

(f) gaskets and seals that do not seal;

(g) any distortion of the overall configuration of a container great enough to prevent proper alignment of handling equipment, mounting and securing on a chassis or vehicle;

(h) any damage to lifting attachments or handling equipment interface features; or

(i) any damage to service or operational equipment.

7.3.2 Additional provisions for the carriage in bulk of goods of classes 4.2, 4.3, 5.1, 6.2, 7 and 8 when the provisions of 7.3.1.1 (a) are applied

7.3.2.1 The codes BK1 and BK2 in column (10) of Table A of Chapter 3.2 have the following meanings:

BK1: Carriage in bulk in sheeted containers or vehicles is permitted;
BK2: Carriage in bulk in closed containers or vehicles is permitted.

7.3.2.2 The container used or the body of the vehicle shall conform to the requirements of Chapter 6.11.

7.3.2.3 ***Goods of Class 4.2***

The total mass carried in a container or vehicle shall be such that its spontaneous ignition temperature is greater than 55 °C.

7.3.2.4 ***Goods of Class 4.3***

These goods shall be carried in containers or vehicles which are watertight.

7.3.2.5 ***Goods of Class 5.1***

Containers or vehicles shall be so constructed or adapted that the goods cannot come into contact with wood or any other incompatible material.

7.3.2.6 ***Wastes of Class 6.2 (UN No. 2900)***

(a) For wastes of UN No. 2900, sheeted containers or vehicles BK1 are permitted provided that they are not filled to maximum capacity to avoid substances coming into contact with the sheeting. Closed containers or vehicles BK2 are also permitted;

(b) Closed and sheeted containers or vehicles, and their openings, shall be leak-proof by design or by the fitting of a suitable liner;

(c) Wastes of UN No. 2900 shall be thoroughly treated with an appropriate disinfectant before loading prior to carriage;

(d) Wastes of UN No. 2900 in a sheeted container or vehicle shall be covered by an additional top liner weighted down by absorbent material treated with an appropriate disinfectant;

(e) Closed or sheeted containers or vehicles used for the carriage of wastes of UN No. 2900 shall not be re-used until after they have been thoroughly cleaned and disinfected.

7.3.2.7 ***Material of Class 7***

For the carriage of unpackaged radioactive material, see 4.1.9.2.3.

7.3.2.8 ***Goods of Class 8***

These goods shall be carried in containers or vehicles which are watertight.

7.3.3 Special provisions for the carriage in bulk when the provisions of 7.3.1.1 (b) are applied

When they are shown under an entry in Column (17) of Table A of Chapter 3.2, the following special provisions apply:

VV1 Carriage in bulk in closed or sheeted vehicles, in closed containers or in large sheeted containers is permitted.

VV2 Carriage in bulk is permitted in closed vehicles with a metal body, closed metal containers and in sheeted vehicles and sheeted large containers covered with a non-combustible sheet and having a metal body or having floor and walls protected from the load.

VV3 Carriage in bulk is permitted in sheeted vehicles and sheeted large containers with adequate ventilation.

VV4 Carriage in bulk is permitted in closed or sheeted vehicles with a metal body, and in closed metal containers or in sheeted large metal containers. For UN Nos. 2008, 2009, 2210, 2545, 2546, 2881, 3189 and 3190, only carriage in bulk of solid waste is permitted.

VV5 Carriage in bulk is permitted in specially equipped vehicles and containers.

The openings used for loading and unloading shall be capable of being closed hermetically.

VV6 *(Reserved)*

VV7 Carriage in bulk in closed or sheeted vehicles, in closed containers or in large sheeted containers is permitted only if the substance is in pieces.

VV8 Carriage in bulk is permitted, as a full load, in closed vehicles, closed containers or sheeted vehicles or large containers covered with an impermeable, non-combustible sheet.

Vehicles and containers shall be so constructed either that the substances contained cannot come into contact with wood or any other combustible material, or that the entire surface of the floor and walls, if made of wood or another combustible material has been provided with an impermeable surfacing resistant to combustion or has been coated with sodium silicate or a similar substance.

VV9a Carriage in bulk is permitted, as a full load, in sheeted vehicles, closed containers or in sheeted large containers with complete walls.

For substances of Class 8, the body of the vehicle or container shall be equipped with a suitable and sufficiently stout inner lining.

VV9b Carriage in bulk of full loads (if Class 8, only for wastes) is permitted in closed containers or in sheeted large containers with complete walls. For wastes of Class 8, containers shall be equipped with a suitable and sufficiently stout inner lining.

VV10 Carriage in bulk is permitted, as a full load, in sheeted vehicles, closed containers or sheeted large containers with complete walls.

The body of vehicles or containers shall be leakproof or rendered leakproof, for example by means of a suitable and sufficiently stout inner lining.

VV11 Carriage in bulk is permitted in specially equipped vehicles and containers in a manner which avoids risks to humans, animals and the environment, e.g. by loading the wastes in bags or by airtight connections.

VV12 Substances for which carriage in tank-vehicles, in portable tanks or in tank-containers is unsuitable because of the high temperature and density of the substance may be carried in special vehicles or containers in accordance with standards specified by the competent authority of the country of origin. If the country of origin is not a contracting party to ADR, the conditions laid down shall be recognized by the competent authority of the first country contracting party to ADR reached by the consignment.

VV13 Carriage in bulk is permitted in specially equipped vehicles or containers in accordance with standards specified by the competent authority of the country of origin. If the country of origin is not a contracting party to ADR, the conditions laid down shall be recognized by the competent authority of the first country contracting party to ADR reached by the consignment.

VV14 (1) Used batteries may be carried in bulk in specially equipped vehicles or containers. Large plastics containers shall not be permitted. Small plastics containers shall be capable of withstanding, when fully loaded, a drop from a height of 0.8 m onto a hard surface at -18 °C, without breakage.

(2) The load compartments of vehicles or containers shall be of steel resistant to the corrosive substances contained in the batteries. Less resistant steels may be used when there is a sufficiently great wall thickness or a plastics lining/layer resistant to the corrosive substances.

The design of the load compartments of vehicles or containers shall take account of any residual currents and impact from the batteries.

***NOTE**: Steel exhibiting a maximum rate of progressive reduction of 0.1 mm per year under the effects of the corrosive substances may be considered as resistant.*

(3) It shall be ensured by means of constructional measures that there will be no leakage of corrosive substances from the load compartments of vehicles or containers during carriage. Open load compartments shall be covered. The cover shall be resistant to the corrosive substances.

(4) Before loading, the load compartments of vehicles or containers, including their equipment, shall be inspected for damage. Vehicles or containers with damaged load compartments shall not be loaded.

The load compartments of vehicles or containers shall not be loaded above the top of their walls.

(5) No batteries containing different substances and no other goods liable to react dangerously with each other shall be present in the load compartments of vehicles or containers (see "*Dangerous reaction*" in 1.2.1).

During carriage no dangerous residue of the corrosive substances contained in the batteries shall adhere to the outer surface of the load compartments of vehicles or containers.

VV15 Carriage in bulk is permitted in closed or sheeted vehicles, closed containers or sheeted large containers with complete walls for substances or mixtures (such as preparations or wastes) containing not more than 1000 mg/kg of substance to which this UN No is assigned.

The bodies of vehicles or containers shall be leakproof or rendered leakproof, for example by means of a suitable and sufficiently stout inner lining.

VV16 Carriage in bulk is permitted in accordance with the provisions of 4.1.9.2.3.

VV17 Carriage in bulk of SCO-I is permitted in accordance with the provisions of 4.1.9.2.3.

CHAPTER 7.4

PROVISIONS CONCERNING CARRIAGE IN TANKS

7.4.1 Dangerous goods may not be carried in tanks unless a code is indicated in Columns (10) or (12) of Table A of Chapter 3.2 or unless a competent authority approval is granted as detailed in 6.7.1.3. The carriage shall be in accordance with the provisions of Chapters 4.2 or 4.3, and the vehicles, whether they be tank-vehicles (with a fixed or demountable tank), battery-vehicles or vehicles carrying tank-containers or portable tanks, shall satisfy the relevant requirements of Chapters 9.1, 9.2 and 9.7.2 concerning the vehicle to be used, as indicated in Column (14) of Table A of Chapter 3.2.

7.4.2 The vehicles designated by the codes FL, OX or AT in 9.1.1.2 shall be used as follows:

- Where a FL vehicle is prescribed, only an FL vehicle may be used;
- Where a OX vehicle is prescribed, only an OX vehicle may be used;
- Where a AT vehicle is prescribed, AT, FL and OX vehicles may be used.

CHAPTER 7.5

PROVISIONS CONCERNING LOADING, UNLOADING AND HANDLING

7.5.1 General provisions concerning loading, unloading and handling

7.5.1.1 The vehicle and its driver, upon arrival at the loading and unloading sites, shall comply with the regulatory provisions (especially those concerning safety, cleanliness and satisfactory operation of the vehicle equipment used in loading and unloading).

7.5.1.2 The loading shall not be carried out if an examination of the documents and a visual inspection of the vehicle and its equipment show that the vehicle or the driver do not comply with the regulatory provisions.

7.5.1.3 The unloading shall not be carried out, if the above-mentioned inspections reveal deficiencies that might affect the safety of the unloading.

7.5.1.4 In accordance with the special provisions of 7.3.3 or 7.5.11, in conformity with Columns (17) and (18) of Table A of Chapter 3.2, certain dangerous goods shall only be forwarded as a "full load" (see definition in 1.2.1). In such a case, the competent authorities may require the vehicle or large container used for such carriage to be loaded at only one point and unloaded at only one point.

7.5.2 Mixed loading prohibition

7.5.2.1 Packages bearing different danger labels shall not be loaded together in the same vehicle or container unless mixed loading is permitted according to the following Table based on the danger labels they bear.

NOTE: *In accordance with 5.4.1.4.2, separate transport documents shall be drawn up for consignments that cannot be loaded together in the same vehicle or container.*

Labels Nos.	1	1.4	1.5	1.6	2.1, 2.2, 2.3	3	4.1	4.1 + 1	4.2	4.3	5.1	5.2	5.2 + 1	6.1	6.2	7 A, B, C	8	9
1	See 7.5.2.2										[d]							[b]
1.4					[a]	[a]	[a]		[a]	[a]	[a]	[a]		[a]	[a]	[a]	[a]	[a] [b] [c]
1.5																		[b]
1.6																		[b]
2.1, 2.2, 2.3		[a]			X	X	X		X	X	X	X		X	X	X	X	X
3		[a]			X	X	X		X	X	X	X		X	X	X	X	X
4.1		[a]			X	X	X		X	X	X	X		X	X	X	X	X
4.1 + 1								X										
4.2		[a]			X	X	X		X	X	X	X		X	X	X	X	X
4.3		[a]			X	X	X		X	X	X	X		X	X	X	X	X
5.1	[d]	[a]			X	X	X		X	X	X	X		X	X	X	X	X
5.2		[a]			X	X	X		X	X	X	X		X	X	X	X	X
5.2 + 1													X					
6.1		[a]			X	X	X		X	X	X	X		X	X	X	X	X
6.2		[a]			X	X	X		X	X	X	X		X	X	X	X	X
7A, B, C		[a]			X	X	X		X	X	X	X		X	X	X	X	X
8		[a]			X	X	X		X	X	X	X		X	X	X	X	X
9	[b]	[a] [b] [c]	[b]	[b]	X	X	X		X	X	X	X		X	X	X	X	X

X *Mixed loading permitted.*

[a] *Mixed loading permitted with 1.4S substances and articles.*

[b] *Mixed loading permitted between goods of Class 1 and life-saving appliances of Class 9 (UN Nos. 2990, 3072 and 3268).*

[c] *Mixed loading permitted between air bag inflators, or air bag modules, or seat-belt pretensioners of Division 1.4, compatibility group G, (UN No. 0503) and air bag inflators or air bag modules or seat-belt pretensioners of Class 9 (UN No. 3268).*

[d] *Mixed loading permitted between blasting explosives (except UN No. 0083 explosive, blasting, type C) and ammonium nitrate and inorganic nitrates of Class 5.1 (UN Nos. 1942 and 2067) provided the aggregate is treated as blasting explosives under Class 1 for the purposes of placarding, segregation, stowage and maximum permissible load.*

7.5.2.2 Packages containing substances or articles of Class 1, bearing a label conforming to models Nos. 1, 1.4, 1.5 or 1.6 which are assigned to different compatibility groups shall not be loaded together in the same vehicle or container, unless mixed loading is permitted in accordance with the following Table for the corresponding compatibility groups.

Compatibility Group	**A**	**B**	**C**	**D**	**E**	**F**	**G**	**H**	**J**	**L**	**N**	**S**
A	X											
B		X		[a]								X
C			X	X	X		X				[b c]	X
D		[a]	X	X	X		X				[b c]	X
E			X	X	X		X				[b c]	X
F						X						X
G			X	X	X		X					X
H								X				X
J									X			X
L										[d]		
N			[b c]	[b c]	[b c]						[b]	X
S		X	X	X	X	X	x	X	X		X	X

X *Mixed loading permitted.*

[a] *Packages containing articles of compatibility group B and those containing substances or articles of compatibility group D may be loaded together on one vehicle or in one container provided they are effectively segregated such that there is no danger of transmission of detonation from the articles of compatibility group B to the substances or articles of compatibility group D. Segregation shall be achieved by the use of separate compartments or by placing one of the two types of explosive in a special containment system. Either method of segregation shall be approved by the competent authority.*

[b] *Different types of articles of division 1.6, compatibility group N, may be carried together as articles of division 1.6, compatibility group N, only when it is proven by testing or analogy that there is no additional risk of sympathetic detonation between the articles. Otherwise they should be treated as hazard division 1.1.*

[c] *When articles of compatibility group N are carried with substances or articles of compatibility groups C, D or E, the articles of compatibility group N should be considered as having the characteristics of compatibility group D.*

[d] *Packages containing substances and articles of Compatibility Group L may be loaded together on one vehicle or in one container with packages containing the same type of substances and articles of that compatibility group.*

7.5.2.3 For the purpose of the application of the prohibitions of mixed loading on one vehicle, no account shall be taken of substances contained in closed containers with complete sides. Nevertheless, the mixed loading prohibitions laid down in 7.5.2.1 concerning mixed loading of packages bearing labels conforming to models Nos. 1, 1.4, 1.5 or 1.6 with other packages, and in 7.5.2.2 concerning mixed loading of explosives of different compatibility groups shall also apply between dangerous goods contained in a container and the other dangerous goods loaded on the same vehicle, whether or not the latter goods are enclosed in one or more other containers.

7.5.3 ***(Reserved)***

7.5.4 Precautions with respect to foodstuffs, other articles of consumption and animal feeds

If special provision CV28 is indicated for a substance or article in Column (18) of Table A of Chapter 3.2, precautions with respect to foodstuffs, other articles of consumption and animal feeds shall be taken as follows.

Packages as well as uncleaned empty packagings, including large packagings and intermediate bulk containers (IBCs), bearing labels conforming to models Nos. 6.1 or 6.2 and those bearing labels conforming to model No.9 containing goods of UN Nos. 2212, 2315, 2590, 3151, 3152 or 3245, shall not be stacked on or loaded in immediate proximity to packages known to contain foodstuffs, other articles of consumption or animal feeds in vehicles, in containers and at places of loading, unloading or transhipment.

When these packages, bearing the said labels, are loaded in immediate proximity of packages known to contain foodstuffs, other articles of consumption or animal feeds, they shall be kept apart from the latter:

(a) by complete partitions which should be as high as the packages bearing the said labels;

(b) by packages not bearing labels conforming to models Nos. 6.1, 6.2 or 9 or packages bearing labels conforming to model No.9 but not containing goods of UN Nos. 2212, 2315, 2590, 3151, 3152 or 3245; or

(c) by a space of at least 0.8 m;

unless the packages bearing the said labels are provided with an additional packaging or are completely covered (e.g. by a sheeting, a fibreboard cover or other measures).

7.5.5 Limitation of the quantities carried

7.5.5.1 If the provisions below, or the additional provisions of 7.5.11 to be applied according to Column (18) of Table A of Chapter 3.2 require a limitation of the quantity of specific goods that can be carried, the fact that dangerous goods are contained in one or more containers shall not affect the mass limitations per transport unit laid down by these provisions.

7.5.5.2 ***Limitations with respect to explosive substances and articles***

7.5.5.2.1 *Substances and quantities carried*

The total net mass in kg of explosive substance (or in the case of explosive articles, the total net mass of explosive substance contained in all the articles combined) which may be carried on one transport unit shall be limited as indicated in the table below (see also 7.5.2.2 as regards the prohibition of mixed loading):

Maximum permissible net mass in kg of explosive in Class 1 goods per transport unit

Transport Unit	Division	1.1		1.2	1.3	1.4		1.5 and 1.6	Empty uncleaned packagings
	Compatibility group	1.1A	Other than 1.1A			Other than 1.4S	1.4S		
EX/II [a]		6.25	1 000	3 000	5 000	15 000	Unlimited	5 000	Unlimited
EX/III [a]		18.75	16 000	16 000	16 000	16 000	Unlimited	16 000	Unlimited

[a] *For the description of EX/II and EX/III vehicles see Part 9.*

7.5.5.2.2 Where substances and articles of different divisions of Class 1 are loaded on one transport unit in conformity with the prohibitions of mixed loading contained in 7.5.2.2, the load as a whole shall be treated as if it belonged to the most dangerous division (in the order 1.1, 1.5, 1.2, 1.3, 1.6, 1.4). However, the net mass of explosives of compatibility group S shall not count towards the limitation of quantities carried.

Where substances classified as 1.5D are carried on one transport unit together with substances or articles of division 1.2, the entire load shall be treated for carriage as if it belonged to division 1.1.

7.5.5.3 ***Limitations with respect to organic peroxides and self-reactive substances***

The quantity of organic peroxides of Class 5.2 and self-reactive substances of Class 4.1 that can be carried in a single transport unit is limited as follows:

Organic peroxide or self-reactive substance	Substances of Type B without temperature control	Substances of Type C without temperature control	Substances of Type D, E or F without temperature control	Substances of Type B with temperature control	Substances of Type C with temperature control	Substances of Type D, E or F with temperature control
Maximum quantity per transport unit	1 000 kg [a]	10 000 kg	20 000 kg	1 000 kg [b]	5 000 kg [c]	20 000 kg

[a] *5 000 kg if the loading space is ventilated at the top and if the transport unit is insulated with heat-resistant material (see 9.3.4).*

[b] *5 000 kg if the transport unit is insulated with a heat-resistant material (see 9.3.4)*

[c] *10 000 kg if the transport unit is insulated with a heat-resistant material (see 9.3.4)*

When substances are carried together in one transport unit, the limits given above shall not be exceeded and the total contents shall not exceed 20 000kg.

7.5.6 ***(Reserved)***

7.5.7 Handling and stowage

7.5.7.1 The various components of a load comprising dangerous goods shall be properly stowed on the vehicle or in the container and secured by appropriate means to prevent them from being significantly displaced in relation to each other and to the walls of the vehicle or container. The load may be protected, for example, by the use of side wall fastening straps, sliding slatboards and adjustable brackets, air bags and anti-slide locking devices. The load is also sufficiently protected within the meaning of the first sentence if each layer of the whole loading space is completely filled with packages.

7.5.7.2 The provisions of 7.5.7.1 also apply to the loading, stowage and unloading of containers on to and from vehicles.

7.5.7.3 The driver or any other member of the crew may not open a package containing dangerous goods.

7.5.8 Cleaning after unloading

7.5.8.1 If, when a vehicle or container which has contained packaged dangerous goods is unloaded, some of the contents are found to have escaped, the vehicle or container shall be cleaned as soon as possible and in any case before reloading.

If it is not possible to do the cleaning locally, the vehicle or container shall be carried, with due regard to adequate safety, to the nearest suitable place where cleaning can be carried out.

Carriage is adequately safe if suitable measures have been taken to prevent the uncontrolled release of the dangerous goods that have escaped.

7.5.8.2 Vehicles or containers which have been loaded with dangerous goods in bulk shall be properly cleaned before reloading unless the new load consists of the same dangerous goods as the preceding load.

7.5.9 Prohibition of smoking

Smoking shall be prohibited during handling operations in the vicinity of vehicles or containers and inside the vehicles or containers.

7.5.10 Precautions against electrostatic charges

In the case of flammable gases, or liquids with a flash-point of 61 °C or below, or UN No. 1361, carbon or carbon black, packing group II, a good electrical connection from the chassis of the vehicle, the portable tank or the tank-container to earth shall be established before tanks are filled or emptied. In addition, the rate of filling shall be limited.

7.5.11 Additional provisions applicable to certain classes or specific goods

In addition to the provisions of sections 7.5.1 to 7.5.10, the following provisions shall apply when they are shown under an entry indicated in Column (18) of Table A of Chapter 3.2.

CV1 (1) The following operations are prohibited:

(a) Loading or unloading goods in a public place in a built-up area without special permission from the competent authorities;

(b) Loading or unloading goods in a public place elsewhere than in a built-up area without prior notice thereof having been given to the competent authorities, unless these operations are urgently necessary for reasons of safety.

(2) If, for any reason, handling operations have to be carried out in a public place, then substances and articles of different kinds shall be separated according to the labels.

CV2 (1) Before loading, the loading surface of the vehicle or container shall be thoroughly cleaned.

(2) The use of fire or naked flame shall be prohibited on vehicles and containers carrying goods, in their vicinity and during the loading and unloading of these goods.

CV3 See 7.5.5.2.

CV4 Substances and articles of compatibility group L shall only be carried as a full load.

CV5 to
CV8 *(Reserved)*

CV9 Packages shall not be thrown or subjected to impact.

Receptacles shall be so stowed in the vehicle or container that they cannot overturn or fall.

CV10 Cylinders as defined in 1.2.1, shall be laid parallel to or at right angles to the longitudinal axis of the vehicle or container; however, those situated near the forward transverse wall shall be laid at right angles to the said axis.

Short cylinders of large diameter (about 30 cm and over) may be stowed longitudinally with their valve-protecting devices directed towards the middle of the vehicle or container.

Cylinders which are sufficiently stable or are carried in suitable devices effectively preventing them from overturning may be placed upright.

Cylinders which are laid flat shall be securely and appropriately wedged, attached or secured so that they cannot shift.

CV11 Receptacles shall always be placed in the position for which they were designed and be protected against any possibility of being damaged by other packages.

CV12 When pallets loaded with articles are stacked, each tier of pallets shall be evenly distributed over the lower tier, if necessary by the interposition of a material of adequate strength.

CV13 If any substances have leaked and been spilled in a vehicle or container, it may not be re-used until after it has been thoroughly cleaned and, if necessary, disinfected or decontaminated. Any other goods and articles carried in the same vehicle or container shall be examined for possible contamination.

CV14 Goods shall be shielded from direct sunlight and heat during carriage.

Packages shall be stored only in cool, well-ventilated places away from heat sources.

CV15 See 7.5.5.3.

CV16 to
CV19 *(Reserved)*

CV20 The provisions of Chapter 5.3 and special provisions V1 and V8(5) and (6) of Chapter 7.2 shall not apply provided that the substance is packaged in accordance with packing method OP1 or OP2 of packing instruction P520 in 4.1.4.1, as required, and the total quantity of substances to which this derogation applies per transport unit is limited to 10 kg.

CV21 The transport unit shall be thoroughly inspected prior to loading.

Before carriage, the carrier shall be informed:

- about the operation of the refrigeration system, including a list of the suppliers of coolant available en route;

- procedures to be followed in the event of loss of temperature control.

In the case of temperature control in accordance with methods R2 or R4 of special provision V8(3) of Chapter 7.2, a sufficient quantity of non-flammable refrigerant (e.g. liquid nitrogen or dry ice), including a reasonable margin for possible delays, shall be carried unless a means of replenishment is assured.

Packages shall be so stowed as to be readily accessible.

The specified control temperature shall be maintained during the whole transport operation, including loading and unloading, as well as any intermediate stops.

CV22 Packages shall be loaded so that a free circulation of air within the loading space provides a uniform temperature of the load. If the contents of one vehicle or large container exceed 5 000 kg of flammable solids and/or organic peroxides, the load shall be divided into stacks of not more than 5 000 kg separated by air spaces of at least 0.05 m.

CV23 When handling packages, special measures shall be taken to ensure that they do not come into contact with water.

CV24 Before loading, vehicles and containers shall be thoroughly cleaned and in particular be free of any combustible debris (straw, hay, paper, etc.).

The use of readily flammable materials for stowing packages is prohibited.

CV25 (1) Packages shall be so stowed that they are readily accessible.

(2) When packages are to be carried at an ambient temperature of not more than 15 °C or refrigerated, the temperature shall be maintained when unloading or during storage.

(3) Packages shall be stored only in cool places away from sources of heat.

CV26 The wooden parts of a vehicle or container which have come into contact with these substances shall be removed and burnt.

CV27 (1) Packages shall be so stowed that they are readily accessible.

(2) When packages are to be carried refrigerated, the functioning of the cooling chain shall be ensured when unloading or during storage.

(3) Packages shall only be stored in cool places away from sources of heat.

CV28 See 7.5.4.

CV29 to CV32 *(Reserved)*

CV33 ***NOTE 1***: "Critical group" means a group of members of the public which is reasonably homogeneous with respect to its exposure for a given radiation source and given exposure pathway and is typical of individual receiving the highest effective dose by the given exposure pathway from the given source.

NOTE 2*: "Members of the public" means in a general sense, any individuals in the population except when subject to occupational or medical exposure.*

NOTE 3: *"Workers" are any persons who work, whether full time, part-time or temporarily, for an employer and who have recognised rights and duties in relation to occupational radiation protection.*

(1) *Segregation*

(1.1) Packages, overpacks, containers and tanks shall be segregated during carriage:

(a) from areas where persons other than those referred to in paragraph (c) have regular access;

(i) in accordance with Table A below; or

(ii) by a distance calculated to ensure members of the critical group in that area receive less than 1mSv per year, taking account of the exposures expected to be delivered by all other relevant sources and practices under control;

and

(b) from undeveloped photographic film and mailbags, in accordance with Table B below;

NOTE: *Mailbags shall be assumed to contain undeveloped film and plates and therefore be separated from radioactive material in the same way.*

and

(c) from workers in regularly occupied working areas either;

(i) in accordance with Table A below; or

(ii) by a distance calculated to ensure that workers in that area receive less than 5mSv per year;

NOTE: *Workers subject to individual monitoring for the purpose of radiation protection shall not be considered for the purpose of segregation.*

and

(d) from other dangerous goods in accordance with 7.5.2.1.

Table A: Minimum distances between packages of category II-YELLOW or of category III-YELLOW and persons

Sum of transport indexes not more than	**Exposure time per year (hours)**			
	Areas where members of the public have regular access		**Regularly occupied working areas**	
	50	250	50	250
	Segregation distance in metres, no shielding material intervening, from:			
2	1	3	0.5	1
4	1.5	4	0.5	1.5
8	2.5	6	1.0	2.5
12	3	7.5	1.0	3
20	4	9.5	1.5	4
30	5	12	2	5
40	5.5	13.5	2.5	5.5
50	6.5	15.5	3	6.5

(1.2) Category II-YELLOW or III-YELLOW packages or overpacks shall not be carried in compartments occupied by passengers, except those exclusively reserved for couriers specially authorized to accompany such packages or overpacks.

(1.3) No persons other than the driver and the other members of the crew shall be permitted in vehicles carrying packages, overpacks or containers bearing category II-YELLOW or III-YELLOW labels.

(1.4) Radioactive material shall be sufficiently segregated from undeveloped photographic film. The basis for determining segregation distances for this purpose shall be that the radiation exposure of undeveloped photographic film due to the carriage of radioactive material be limited to 0.1 mSv per consignment of such film (see Table B below).

Table B: Minimum distances between packages of category II-YELLOW or of category III-YELLOW and packages bearing the word "FOTO", or mailbags

Total number of packages not more than		Sum of transport indexes not more than	Journey or storage duration, in hours							
Category			1	2	4	10	24	48	120	240
III-yellow	II-yellow		Minimum distances in metres							
		0.2	0.5	0.5	0.5	0.5	1	1	2	3
		0.5	0.5	0.5	0.5	1	1	2	3	5
	1	1	0.5	0.5	1	1	2	3	5	7
	2	2	0.5	1	1	1.5	3	4	7	9
	4	4	1	1	1.5	3	4	6	9	13
	8	8	1	1.5	2	4	6	8	13	18
1	10	10	1	2	3	4	7	9	14	20
2	20	20	1.5	3	4	6	9	13	20	30
3	30	30	2	3	5	7	11	16	25	35
4	40	40	3	4	5	8	13	18	30	40
5	50	50	3	4	6	9	14	20	32	45

(2) *Activity limits*

The total activity in a vehicle, for carriage of LSA material or SCO in Industrial Packages Type 1 (Type IP-1), Type 2 (Type IP-2), Type 3 (Type IP-3) or unpackaged, shall not exceed the limits shown in Table C below.

Table C: Vehicle activity limits for LSA material and SCO in industrial packages or unpackaged

Nature of material or object	Activity limit for vehicle
LSA-I	No limit
LSA-II and LSA-III non-combustible solids	No limit
LSA-II and LSA-III combustible solids, and all liquids and gases	100 A_2
SCO	100 A_2

(3) *Stowage during carriage and storage in transit*

(3.1) Consignments shall be securely stowed.

(3.2) Provided that its average surface heat flux does not exceed 15 W/m^2 and that the immediately surrounding cargo is not in bags, a package or overpack may be carried or stored among packaged general cargo without any special stowage provisions except as may be specifically required by the competent authority in an applicable approval certificate.

(3.3) Loading of containers and accumulation of packages, overpacks and containers shall be controlled as follows:

(a) Except under the condition of exclusive use, the total number of packages, overpacks and containers aboard a single vehicle shall be so limited that the total sum of the transport indexes aboard the vehicle does not exceed the values shown in Table D below. For consignments of LSA-I material there shall be no limit on the sum of the transport indexes;

(b) Where a consignment is carried under exclusive use, there shall be no limit on the sum of the transport indexes aboard a single vehicle;

(c) The radiation level under routine conditions of carriage shall not exceed 2 mSv/h at any point on, and 0.1 mSv/h at 2 m from, the external surface of the vehicle, except for consignments carried under exclusive use, for which the radiation limits around the vehicle are set forth in (3.5) (b) and (c);

(d) The total sum of the criticality safety indexes in a container and aboard a vehicle shall not exceed the values shown in Table E below.

Table D: Transport Index limits for containers and vehicles not under exclusive use

Type of container or vehicle	Limit on total sum of transport indexes in a container or aboard a vehicle
Small container	50
Large container	50
Vehicle	50

Table E: Criticality Safety Index for containers and vehicles containing fissile material

Type of container or vehicle	Limit on total sum of criticality safety indexes	
	Not under exclusive use	Under exclusive use
Small container	50	n.a.
Large container	50	100
Vehicle	50	100

(3.4) Any package or overpack having either a transport index greater than 10, or any consignment having a criticality safety index greater than 50, shall be carried only under exclusive use.

(3.5) For consignments under exclusive use, the radiation level shall not exceed:

(a) 10 mSv/h at any point on the external surface of any package or overpack, and may only exceed 2 mSv/h provided that:

(i) the vehicle is equipped with an enclosure which, during routine conditions of carriage, prevents the access of unauthorized persons to the interior of the enclosure;

(ii) provisions are made to secure the package or overpack so that its position within the vehicle enclosure remains fixed during routine conditions of carriage, and

(iii) there is no loading or unloading during the shipment;

(b) 2 mSv/h at any point on the outer surfaces of the vehicle, including the upper and lower surfaces, or, in the case of an open vehicle, at any point on the vertical planes projected from the outer edges of the vehicle, on the upper surface of the load, and on the lower external surface of the vehicle; and

(c) 0.1 mSv/h at any point 2 m from the vertical planes represented by the outer lateral surfaces of the vehicle, or, if the load is carried in an open vehicle, at any point 2 m from the vertical planes projected from the outer edges of the vehicle.

(4) *Segregation of packages containing fissile material during carriage and storage in transit*

(4.1) Any group of packages, overpacks, and containers containing fissile material stored in transit in any one storage area shall be so limited that the total sum of the CSIs in the group does not exceed 50. Each group shall be stored so as to maintain a spacing of at least 6 m from other such groups.

(4.2) Where the total sum of the criticality safety indexes on board a vehicle or in a container exceeds 50, as permitted in Table E above, storage shall be such as to maintain a spacing of at least 6 m from other groups of packages, overpacks or containers containing fissile material or other vehicles carrying radioactive material.

(5) *Damaged or leaking packages, contaminated packagings*

(5.1) If it is evident that a package is damaged or leaking, or if it is suspected that the package may have leaked or been damaged, access to the package shall be restricted and a qualified person shall, as soon as possible, assess the extent of contamination and the resultant radiation level of the package. The scope of the assessment shall include the package, the vehicle, the adjacent loading and unloading areas, and, if necessary, all other material which has been carried in the vehicle.

When necessary, additional steps for the protection of persons property and the environment, in accordance with provisions established by the competent authority, shall be taken to overcome and minimize the consequences of such leakage or damage.

(5.2) Packages damaged or leaking radioactive contents in excess of allowable limits for normal conditions of carriage may be removed to an acceptable interim location under supervision, but shall not be forwarded until repaired or reconditioned and decontaminated.

(5.3) A vehicle and equipment used regularly for the carriage of radioactive material shall be periodically checked to determine the level of contamination. The frequency of such checks shall be related to the likelihood of contamination and the extent to which radioactive material is carried.

(5.4) Except as provided in paragraph (5.5), any vehicle, or equipment or part thereof which has become contaminated above the limits specified in 4.1.9.1.2 in the course of carriage of radioactive material, or which shows a radiation level in excess of 5 µSv/h at the surface, shall be decontaminated as soon as possible by a qualified person and shall not be re-used unless the non-fixed contamination does not exceed the limits specified in 4.1.9.1.2, and the radiation level resulting from the fixed contamination on surfaces after decontamination is less than 5 µSv/h at the surface.

(5.5) A container, tank, intermediate bulk container or vehicle dedicated to the carriage of unpackaged radioactive material under exclusive use shall be excepted from the requirements of the previous paragraph (5.4) and in 4.1.9.1.4 solely with regard to its internal surfaces and only for as long as it remains under that specific exclusive use.

(6) *Other provisions*

Where a consignment is undeliverable, the consignment shall be placed in a safe location and the competent authority shall be informed as soon as possible and a request made for instructions on further action.

CV34 Prior to carriage of pressure receptacles it shall be ensured that the pressure has not risen due to potential hydrogen generation.

CV35 If bags are used as single packagings, they shall be adequately separated to allow for the dissipation of heat.

CV36 Packages shall preferably be loaded in open or ventilated vehicles or open or ventilated containers. If this is not feasible and packages are carried in other closed vehicles or containers, the cargo doors of the vehicles or containers shall be marked with the following in letters not less than 25 mm high:

"WARNING
NO VENTILATION
OPEN WITH CAUTION"

This shall be in a language considered appropriate by the consignor.

ANNEX B

PROVISIONS CONCERNING TRANSPORT EQUIPMENT AND TRANSPORT OPERATIONS

PART 8

Requirements for vehicle crews, equipment, operation and documentation

CHAPTER 8.1

GENERAL REQUIREMENTS CONCERNING TRANSPORT UNITS AND EQUIPMENT ON BOARD

8.1.1 Transport units

A transport unit loaded with dangerous goods may in no case include more than one trailer (or semi-trailer).

8.1.2 Documents to be carried on the transport unit

8.1.2.1 In addition to the documents required under other regulations, the following documents shall be carried on the transport unit:

(a) The transport documents prescribed in 5.4.1, covering all the dangerous goods carried and, when appropriate, the container packing certificate prescribed in 5.4.2;

(b) The instructions in writing prescribed in 5.4.3, relating to all the dangerous goods carried;

(c) A copy of the main text of the special agreement(s) concluded in accordance with Chapter 1.5, if carriage is carried out on the basis of such agreement(s);

(d) Means of identification, which include a photograph, for each crew member, in accordance with 1.10.1.4.

8.1.2.2 Where the provisions of ADR require the following documents to be drawn up, they shall likewise be carried on the transport unit:

(a) The certificate of approval referred to in 9.1.2 for each transport unit or element thereof;

(b) The driver's training certificate prescribed in 8.2.1;

(c) The permit authorizing the transport operation, as prescribed in 5.4.1.2.1 (c), 5.4.1.2.3.3, 2.2.41.1.13 and 2.2.52.1.8.

8.1.2.3 The instructions in writing prescribed in 5.4.3 shall be kept in a readily identifiable form in the driver's cab. The carrier shall ensure that the drivers concerned understand and are capable of carrying out these instructions properly.

8.1.2.4 Instructions in writing which are not applicable to the goods which are on board the vehicle shall be kept separate from pertinent documents in such a way as to prevent confusion.

8.1.3 Placarding and marking

Transport units carrying dangerous goods shall be placarded and marked in conformity with Chapter 5.3.

8.1.4 Fire-fighting equipment

8.1.4.1 The following provisions apply to transport units carrying dangerous goods other than those referred to in 8.1.4.2:

(a) Every transport unit shall be equipped with at least one portable fire extinguisher for the inflammability classes [1] A, B and C, with a minimum capacity of 2 kg dry powder (or an equivalent capacity for any other suitable extinguishant agent) suitable for fighting a fire in the engine or cab of the transport unit;

(b) Additional equipment is required as follows:

(i) for transport units with a maximum permissible mass of more than 7.5 tonnes, one or more portable fire extinguishers for the inflammability classes[1] A, B and C, with a minimum total capacity of 12 kg dry powder (or an equivalent capacity for any other suitable extinguishing agent), of which at least one shall have a minimum capacity of 6 kg;

(ii) for transport units with a maximum permissible mass of more than 3.5 tonnes up to and including 7.5 tonnes, one or more portable fire extinguishers for the inflammability classes[1] A, B and C, with a minimum total capacity of 8 kg dry powder (or an equivalent capacity for any other suitable extinguishing agent), of which at least one shall have a minimum capacity of 6 kg;

(iii) for transport units with a maximum permissible mass of up to and including 3.5 tonnes, one or more portable fire extinguishers for the inflammability classes[1] A, B and C with a minimum total capacity of 4 kg dry powder (or an equivalent capacity for any other suitable extinguishing agent);

(c) The capacity of the fire extinguisher(s) required under (a) may be deducted from the minimum total capacity of the extinguishers required under (b).

8.1.4.2 Transport units carrying dangerous goods in accordance with 1.1.3.6 shall be equipped with one portable fire extinguisher for the inflammability classes[1] A, B and C, with a minimum capacity of 2 kg dry powder (or an equivalent capacity for any other suitable extinguishing agent).

8.1.4.3 The extinguishing agent shall be suitable for use on a vehicle and shall comply with the relevant requirements of EN 3 Portable fire extinguishers, Parts 1 to 6 (EN 3-1:1996, EN 3-2:1996, EN 3-3:1994, EN 3-4:1996, EN 3-5:1996, EN 3-6:1995).

If the vehicle is equipped with a fixed fire extinguisher, automatic or easily brought into action for fighting a fire in the engine, the portable extinguisher need not be suitable for fighting a fire in the engine. The extinguishing agents shall be such that they are not liable to release toxic gases into the driver's cab or under the influence of the heat of the fire.

8.1.4.4 The portable fire extinguishers conforming to the provisions of 8.1.4.1 or 8.1.4.2 shall be fitted with a seal verifying that they have not been used.

In addition, they shall bear a mark of compliance with a standard recognized by a competent authority and an inscription at least indicating the date (month, year) of the next recurrent inspection or of the maximum permissible period of use, as applicable.

---

[1] *For the definition of the inflammability classes, see Standard EN 2:1992 Classification of fires.*

The fire extinguishers shall be subjected to periodic inspections in accordance with authorized national standards in order to guarantee their functional safety.

8.1.4.5 The fire extinguishers shall be installed on the transport units in a way that they are easily accessible to the vehicle crew. The installation shall be carried out in such a way that the fire extinguishers shall be protected against effects of the weather so that their operational safety is not affected.

8.1.5 Miscellaneous equipment

Every transport unit carrying dangerous goods shall be equipped with:

(a) The following general purpose safety equipment:

- For each vehicle, at least one chock of a size suited to the weight of the vehicle and to the diameter of the wheels;

- Two self-standing warning signs (e.g. reflective cones or triangles or flashing amber lights which are independent from the electrical equipment of the vehicle);

- A suitable warning vest or warning clothing (e.g. as described in European Standard EN 471) for each member of the vehicle crew;

- A pocket lamp (see also 8.3.4) for each member of the vehicle crew;

(b) A respiratory protective device in conformity with additional requirement S7 (see Chapter 8.5) if this additional requirement applies according to the indication in Column (19) of Table A of Chapter 3.2;

(c) The personal protection and the equipment necessary to take the additional and/or special actions referred to in the instructions in writing set out in 5.4.3.

CHAPTER 8.2

REQUIREMENTS CONCERNING THE TRAINING OF THE VEHICLE CREW

8.2.1 General requirements concerning the training of drivers

8.2.1.1 Drivers of vehicles carrying dangerous goods shall hold a certificate issued by the competent authority or by any organization recognized by that authority stating that they have participated in a training course and passed an examination on the particular requirements that have to be met during carriage of dangerous goods.

8.2.1.2 Drivers of vehicles carrying dangerous goods shall attend a basic training course. Training shall be given in the form of a course approved by the competent authority. Its main objectives are to make drivers aware of hazards arising in the carriage of dangerous goods and to give them basic information indispensable for minimizing the likelihood of an incident taking place and, if it does, to enable them to take measures which may prove necessary for their own safety and that of the public and the environment, for limiting the effects of an incident. This training, which shall include individual practical exercises, shall act as the basis of training for all categories of drivers covering at least the subjects defined in 8.2.2.3.2.

8.2.1.3 Drivers of vehicles carrying dangerous goods in fixed tanks or demountable tanks with a capacity exceeding 1 m^3, drivers of battery-vehicles with a total capacity exceeding 1 m^3 and drivers of vehicles carrying dangerous goods in tank-containers, portable tanks or MEGCs with an individual capacity exceeding 3 m^3 on a transport unit, shall attend a specialization training course for carriage in tanks covering at least the subjects defined in 8.2.2.3.3.

8.2.1.4 Drivers of vehicles carrying substances or articles of Class 1 (see additional requirement S1 in Chapter 8.5) or certain radioactive material (see special provisions S11 and S12 in Chapter 8.5) shall attend specialization training courses covering at least the subjects defined in 8.2.2.3.4 or 8.2.2.3.5.

8.2.1.5 By means of appropriate endorsements on his certificate made every five years by the competent authority or by any organization recognized by that authority, a vehicle driver shall be able to show that he has in the year before the date of expiry of his certificate completed refresher training and has passed corresponding examination. The new period of validity shall begin with the date of expiry of the certificate.

8.2.1.6 Initial or refresher basic training courses and initial or refresher specialization training courses may be given in the form of comprehensive courses, conducted integrally, on the same occasion and by the same training organization.

8.2.1.7 Initial training courses, refresher courses, practical exercises, examinations and the role of competent authorities shall comply with the provisions of 8.2.2.

8.2.1.8 All training certificates conforming to the requirements of this section and issued in accordance with the model shown in 8.2.2.8.3 by the competent authority of a Contracting Party or by any organization recognized by that authority shall be accepted during their period of validity by the competent authorities of other Contracting Parties.

8.2.1.9 The certificate shall be prepared in the language or one of the languages of the country of the competent authority which issued the certificate or recognized the issuing organization and, if this language is not English, French or German, also in English, French or German, except where otherwise provided by agreements concluded between the countries concerned with the transport operation.

8.2.2 Special requirements concerning the training of drivers

8.2.2.1 The necessary knowledge and skills shall be imparted by training covering theoretical courses and practical exercises. The knowledge shall be tested in an examination.

8.2.2.2 The training provider shall ensure that the training instructors have a good knowledge of, and take into consideration, recent developments in regulations and training requirements relating to the carriage of dangerous goods. The training shall be practice-related. The training programme shall conform with the approval, on the subjects set out in 8.2.2.3.2 to 8.2.2.3.5. The initial training and refresher training shall also include individual practical exercises (see 8.2.2.4.5).

8.2.2.3 ***Structure of training***

8.2.2.3.1 Initial and refresher training shall be given in the form of a basic course and, when applicable, specialization courses.

8.2.2.3.2 Subjects to be covered by the basic course will be, at least:

(a) General requirements governing the carriage of dangerous goods;

(b) Main types of hazard;

(c) Information on environmental protection in the control of the transfer of wastes;

(d) Preventive and safety measures appropriate to the various types of hazard;

(e) What to do after an accident (first aid, road safety, basic knowledge about the use of protective equipment, etc.);

(f) Marking, labelling, placarding and orange-coloured plate marking;

(g) What a driver should and should not do during the carriage of dangerous goods;

(h) Purpose and the method of operation of technical equipment on vehicles;

(i) Prohibitions on mixed loading in the same vehicle or container;

(j) Precautions to be taken during loading and unloading of dangerous goods;

(k) General information concerning civil liability;

(l) Information on multimodal transport operations;

(m) Handling and stowage of packages;

(n) Instructions on behaviour in tunnels (prevention and safety, action in the event of fire or other emergencies, etc.).

8.2.2.3.3 Special subjects to be covered by the specialization course for carriage in tanks shall be, at least:

(a) Behaviour of vehicles on the road, including movements of the load;

(b) Specific requirements of the vehicles;

(c) General theoretical knowledge of the various and different filling and discharge systems;

(d) Specific additional provisions applicable to the use of those vehicles (certificates of approval, approval marking, placarding and orange-coloured plate marking, etc.).

8.2.2.3.4 Special subjects to be covered by the specialization course for the carriage of substances and articles of Class 1 shall be, at least:

(a) Specific hazards related to explosive and pyrotechnical substances and articles;

(b) Specific requirements concerning mixed loading of substances and articles of Class 1.

8.2.2.3.5 Special subjects to be covered by the specialization course for the carriage of radioactive material of Class 7 shall be, at least:

(a) Specific hazards related to ionizing radiation;

(b) Specific requirements concerning packing, handling, mixed loading and stowage of radioactive material;

(c) Special measures to be taken in the event of an accident involving radioactive material.

8.2.2.4 ***Initial training programme***

8.2.2.4.1 The minimum duration of the theoretical element of each initial course or part of the comprehensive course shall be as follows:

Basic course	18 teaching units [1]
Specialization course for carriage in tanks	12 teaching units [1]
Specialization course for carriage of substances and articles of Class 1	8 teaching units
Specialization course for carriage of radioactive material of Class 7	8 teaching units

8.2.2.4.2 The total duration of the comprehensive course may be determined by the competent authority, who shall maintain the duration of the basic course and the specialization course for tanks, but may supplement it with shortened specialization courses for Classes 1 and 7.

8.2.2.4.3 Teaching units are intended to last 45 minutes.

8.2.2.4.4 Normally, not more than eight teaching units are permitted on each day of the course.

8.2.2.4.5 The individual practical exercises shall take place in connection with the theoretical training, and shall at least cover first aid, fire-fighting and what to do in case of an incident or accident.

8.2.2.5 ***Refresher training programme***

8.2.2.5.1 Refresher training undertaken at regular intervals serves the purpose of bringing the drivers' knowledge up to date; it shall cover new technical, legal and substance-related developments.

8.2.2.5.2 Refresher training shall have been completed before the period referred to in 8.2.1.5 has expired.

---

[1] *Additional teaching units are required for practical exercises referred to in 8.2.2.4.5 below which will vary depending on the number of drivers under instruction.*

8.2.2.5.3 The duration of the refresher training including individual practical exercises shall be of at least two days.

8.2.2.5.4 Normally, not more than eight teaching units shall be permitted on each training day.

8.2.2.6 ***Approval of training***

8.2.2.6.1 The training courses shall be subject to approval by the competent authority.

8.2.2.6.2 Approval shall only be given with regard to applications submitted in writing.

8.2.2.6.3 The following documents shall be attached to the application for approval:

(a) A detailed training programme specifying the subjects taught and indicating the time schedule and planned teaching methods;

(b) Qualifications and fields of activities of the teaching personnel;

(c) Information on the premises where the courses take place and on the teaching materials as well as on the facilities for the practical exercises;

(d) Conditions of participation in the courses, such as number of participants.

8.2.2.6.4 The competent authority shall organize the supervision of training and examinations.

8.2.2.6.5 Approval shall be granted in writing by the competent authority subject to the following conditions:

(a) The training shall be given in conformity with the application documents;

(b) The competent authority shall be granted the right to send authorized persons to be present at the training courses and examinations;

(c) The competent authority shall be advised in time of the dates and the places of the individual training courses;

(d) The approval may be withdrawn if the conditions of approval are not complied with.

8.2.2.6.6 The approval document shall indicate whether the courses concerned are basic or specialization courses, initial or refresher courses.

8.2.2.6.7 If the training body, after a training course has been given approval, intends to make any alterations with respect to such details as were relevant to the approval, it shall seek permission in advance from the competent authority. This applies in particular to changes concerning the training programme.

8.2.2.7 ***Examinations***

8.2.2.7.1 *Examinations for the initial basic course*

8.2.2.7.1.1 After completion of the basic training, including the practical exercises, an examination shall be held on the basic course.

8.2.2.7.1.2 In the examination, the candidate has to prove that he has the knowledge, insight and skill for the practice of professional driver of vehicles carrying dangerous goods as provided in the basic training course.

8.2.2.7.1.3 For this purpose the competent authority, or the examination body approved by that authority, shall prepare a catalogue of questions which refer to the items summarized in 8.2.2.3.2. Questions in the examination shall be drawn from this catalogue. The candidates shall not have any knowledge of the questions selected from the catalogue prior to the examination.

8.2.2.7.1.4 A single examination for comprehensive courses may be held.

8.2.2.7.1.5 Each competent authority shall supervise the modalities of the examination.

8.2.2.7.1.6 The examination shall take the form of a written examination or a combination of a written and oral examination. Each candidate shall be asked at least 25 written questions. The duration of the examination shall be at least 45 minutes. The questions may be of a varying degree of difficulty and be allocated a different weighting.

8.2.2.7.2 *Examinations for initial specialization courses for carriage in tanks or for carriage of explosive substances and articles or radioactive material*

8.2.2.7.2.1 After having sat the examination on the basic course and after having attended the specialization course for carriage in tanks or for the carriage of explosive or radioactive material, the candidate shall be allowed to take part in the corresponding examination.

8.2.2.7.2.2 This examination shall be held and supervised on the same basis as in 8.2.2.7.1.

8.2.2.7.2.3 At least 15 questions shall be asked with respect to each specialization course.

8.2.2.7.3 *Examinations for refresher training*

8.2.2.7.3.1 After having undertaken refresher training the candidate shall be allowed to take part in the corresponding examination.

8.2.2.7.3.2 The examination shall be held and supervised on the same basis as set out in 8.2.2.7.1.

8.2.2.7.3.3 In the examination at least 15 questions shall be asked with respect to the refresher training.

8.2.2.8 ***Certificate of driver's training***

8.2.2.8.1 According to 8.2.1.8, the certificate shall be issued:

(a) After completion of a basic training course, provided the candidate has successfully passed the examination in accordance with 8.2.2.7.1;

(b) If applicable, after completion of a specialization course for carriage in tanks or carriage of explosive substances or articles or of radioactive material, or after having acquired the knowledge referred to in special provisions S1 and S11 in Chapter 8.5, provided the candidate has successfully passed an examination in accordance with 8.2.2.7.2.

8.2.2.8.2 The certificate shall be renewed if the candidate furnishes proof of his participation in refresher training in accordance with 8.2.1.5 and if he has passed an examination in accordance with 8.2.2.7.3.

8.2.2.8.3 The certificate shall have the layout of the model below. It is recommended that the format shall be the same as the European national driving permit, namely A7 (105 mm × 74 mm), or a double sheet that can be folded to that format.

Model of certificate

1

ADR - TRAINING CERTIFICATE FOR DRIVERS OF VEHICLES CARRYING DANGEROUS GOODS

in tanks [1] other than in tanks [1]

Certificate No. .....

Distinguishing sign of issuing State .....

Valid for class(es) [1, 2]

in tanks	other than in tanks
1	1
2	2
3	3
4.1, 4.2, 4.3	4.1, 4.2, 4.3
5.1, 5.2	5.1, 5.2
6.1, 6.2	6.1, 6.2
7	7
8	8
9	9

until (date) [3] .....

[1] Strike out what does not apply.
[2] For extension to other classes, see page 3.
[3] For renewal, see page 2.

2

Surname .....

First name(s) .....

Date of birth ..... Nationality .....

Signature of holder .....

Issued by .....

Date .....

Signature [4] .....

Renewed until .....

By .....

Date .....

Signature [4] .....

[4] and/or seal (or stamp) of issuing authority.

3

EXTENDED TO CLASS(ES) [5]

in tanks
1
2
3 Date .....
4.1, 4.2, 4.3
5.1, 5.2 Signature and/or seal or stamp
6.1, 6.2 .....
7
8
9

other than in tanks
1
2
3 Date .....
4.1, 4.2, 4.3
5.1, 5.2 Signature and/or seal or stamp
6.1, 6.2 .....
7
8
9

[5] Strike out what does not apply.

4

For national regulations only

8.2.3 Training of persons other than the drivers holding a certificate in accordance with 8.2.1, involved in the carriage of dangerous goods by road

Persons whose duties concern the carriage of dangerous goods by road shall have received training in the requirements governing the carriage of such goods appropriate to their responsibilities and duties according to Chapter 1.3. This requirement shall apply to individuals such as personnel who are employed by the road vehicle operator or the consignor, personnel who load or unload dangerous goods, personnel in freight forwarding or shipping agencies and drivers of vehicles other than drivers holding a certificate in accordance with 8.2.1, involved in the carriage of dangerous goods by road.

.

CHAPTER 8.3

MISCELLANEOUS REQUIREMENTS TO BE COMPLIED WITH BY THE VEHICLE CREW

8.3.1 Passengers

Apart from members of the vehicle crew, no passengers may be carried in transport units carrying dangerous goods.

8.3.2 Use of fire-fighting appliances

The crew of the vehicle shall know how to use the fire-fighting appliances.

8.3.3 Prohibition on opening packages

A driver or a driver's assistant may not open a package containing dangerous goods.

8.3.4 Portable lighting apparatus

A vehicle may not be entered by persons carrying lighting apparatus comprising a flame. In addition, the lighting apparatus used shall not exhibit any metal surface liable to produce sparks.

8.3.5 Prohibition on smoking

Smoking shall be prohibited during handling operations in the vicinity of vehicles and inside the vehicles.

8.3.6 Running the engine during loading or unloading

Except where the engine has to be used to drive the pumps or other appliances for loading or unloading the vehicle and the laws of the country in which the vehicle is operating permit such use, the engine shall be shut off during loading and unloading operations.

8.3.7 Use of the parking brake

No transport unit carrying dangerous goods may be parked without the parking brakes being applied.

CHAPTER 8.4

REQUIREMENTS CONCERNING THE SUPERVISION OF VEHICLES

Vehicles carrying dangerous goods in the quantities shown in special provisions S1 (6) and S14 to S21 of Chapter 8.5 for a given substance according to Column (19) of Table A of Chapter 3.2 shall be supervised or alternatively may be parked, unsupervised, in a secure depot or secure factory premises. If such facilities are not available, the vehicle, after having been properly secured, may be parked in an isolated position meeting the requirements of (a), (b) or (c) below:

(a) A vehicle park supervised by an attendant who has been notified of the nature of the load and the whereabouts of the driver;

(b) A public or private vehicle park where the vehicle is not likely to suffer damage from other vehicles; or

(c) A suitable open space separated from the public highway and from dwellings, where the public does not normally pass or assemble.

The parking facilities permitted in (b) shall be used only if those described in (a) are not available, and those described in (c) may be used only if facilities described in (a) and (b) are not available.

CHAPTER 8.5

ADDITIONAL REQUIREMENTS RELATING TO PARTICULAR CLASSES OR SUBSTANCES

In addition to the requirements of Chapters 8.1 to 8.4, when reference is made to them in Column (19) of Table A of Chapter 3.2, the following requirements shall apply to the carriage of the substances or articles concerned. In the event of conflict with the requirements of Chapters 8.1 to 8.4, the requirements of this Chapter shall take precedence.

S1: Additional requirements concerning the carriage of explosive substances and articles (Class 1)

(1) ***Special training of drivers***

(a) The requirements of 8.2.1 shall apply to drivers of vehicles carrying substances or articles of Class 1;

(b) Drivers of vehicles carrying substances or articles of Class 1 shall attend a specialization training course covering at least the subjects defined in 8.2.2.3.4;

(c) If, according to other regulations applicable in the country of a Contracting Party, a driver has followed equivalent training under a different regime or for a different purpose, covering the subjects referred to in (b), the specialization course may be totally or partially dispensed with.

(2) ***Approved official***

If the national regulations so provide, the competent authority of a country contracting party to ADR may require an approved official to be carried in the vehicle at the carrier's expense.

(3) ***Prohibition of fire and naked flame***

The use of fire or naked flame shall be prohibited on vehicles carrying substances and articles of Class 1, in their vicinity and during the loading and unloading of these substances and articles.

(4) ***Places of loading and unloading***

(a) Loading or unloading of substances and articles of Class 1 shall not take place in a public place in a built-up area without special permission from the competent authorities;

(b) Loading or unloading of substances and articles of Class 1 in a public space elsewhere than in a built-up area without prior notice thereof having been given to the competent authorities shall be prohibited, unless operations are urgently necessary for reasons of safety;

(c) If, for any reason, handling operations have to be carried out in a public place, then substances and articles of different kinds shall be separated according to the labels;

(d) When vehicles carrying substances and articles of Class 1 are obliged to stop for loading or unloading operations in a public place, a distance of at least 50 m shall be maintained between the stationary vehicles.

(5) ***Convoys***

(a) When vehicles carrying substances and articles of Class 1 travel in convoy, a distance of not less than 50 m shall be maintained between each transport unit and the next;

(b) The competent authority may lay down rules for the order or composition of convoys.

(6) ***Supervision of vehicles***

The requirements of Chapter 8.4 shall be applicable only when substances and articles of Class 1 having a total mass of explosive substance of more than 50 kg are carried in a vehicle.

In addition, these substances and articles shall be supervised at all times in order to prevent any malicious act and to alert the driver and the competent authorities in the event of loss or fire.

Empty uncleaned packagings are exempted.

S2: Additional requirements concerning the carriage of flammable liquids or gases

(1) ***Portable lamps***

Closed vehicles carrying liquids having a flash-point of not more than 61 °C or flammable substances or article of Class 2, shall not be entered by persons carrying lighting apparatus other than portable lamps so designed and constructed that they cannot ignite any flammable vapours or gases which may have penetrated into the interior of the vehicle.

(2) ***Operation of combustion heaters during loading or unloading***

The operation of combustion heaters of vehicles of type FL (see Part 9) is forbidden during loading and unloading and at loading sites.

(3) ***Precautions against electrostatic charges***

In the case of vehicles of type FL (see Part 9), a good electrical connection from the vehicle chassis to earth shall be established before tanks are filled or emptied. In addition, the rate of filling shall be limited.

S3: Special provisions concerning the carriage of infectious substances

For transport units carrying dangerous substances of Class 6.2, the requirements of 8.1.4.1 (b) and 8.3.4 shall not apply.

S4: **Additional requirements concerning carriage under controlled temperatures**

Maintenance of the prescribed temperature is essential for safe carriage. In general, there shall be:

- thorough inspection of the transport unit prior to loading;
- instructions to the carrier about the operation of the refrigeration system, including a list of the suppliers of coolant available en route;
- procedures to be followed in the event of loss of control;
- regular monitoring of operating temperatures; and
- availability of a back-up refrigeration system or spare parts.

The temperature of the air space within the transport unit shall be measured by two independent sensors and the output shall be so recorded that temperature changes are readily detectable.

The temperature shall be checked every four to six hours and logged.

If the control temperature is exceeded during carriage, an alert procedure shall be initiated involving any necessary repairs to the refrigeration equipment or an increase in the cooling capacity (e.g. by adding liquid or solid coolant). There shall also be frequent checking of the temperature and preparations for implementation of the emergency procedures. If the emergency temperature (see also 2.2.41.1.17 and 2.2.52.1.15 to 2.2.52.1.18) is reached, the emergency procedures shall be set in operation.

***NOTE**: This provision S4 does not apply to substances referred to in 3.1.2.6 when substances are stabilized by the addition of chemical inhibitors such that the SADT is greater than 50 °C. In this latter case, temperature control may be required under conditions of carriage where the temperature may exceed 55 °C.*

S5: **Special provisions common to the carriage of radioactive material of Class 7 in excepted packages (UN Nos. 2908, 2909, 2910 and 2911) only**

The requirements of the instructions in writing of 8.1.2.1 (b) and of 8.2.1, 8.3.1 and 8.3.4 shall not apply.

S6: **Special provisions common to the carriage of radioactive material of Class 7 other than in excepted packages**

The provisions of 8.3.1 shall not apply to vehicles carrying only packages, overpacks or containers bearing category I-WHITE labels.

The provisions of 8.3.4 shall not apply provided there is no subsidiary risk.

Other additional requirements or special provisions

S7: When gases or articles designated with letters T, TO, TF, TC, TFC, TOC are being carried, each member of the vehicle crew shall be provided with a respiratory protective device enabling them to escape (e.g. escape hood or mask with a combined gas/particle cartridge A1B1E1K1-P1 or A2B2E2K2-P2, as described in European standard EN 141).

S8: When a transport unit is loaded with more than 2 000 kg of these substances, stops for service requirements shall as far as possible not be made near inhabited places or frequented places. A longer stop near such places is permissible only with the consent of the competent authorities.

S9: During the carriage of these substances, stops for service requirements shall as far as possible not be made near inhabited places or frequented places. A longer stop near such places is permissible only with the consent of the competent authorities.

S10: During the period April to October, when a vehicle is stationary, the packages shall, if the legislation of the country in which the vehicle is halted so requires, be effectively protected against the action of the sun, e.g. by means of sheets placed not less than 20 cm above the load.

S11: (1) The requirements of 8.2.1 shall apply.

(2) Drivers shall attend a specialization training course covering at least the subjects defined in 8.2.2.3.5.

(3) If, according to other regulations applicable in the country of a Contracting Party, a driver has followed equivalent training under a different regime or for a different purpose covering the subjects referred to in (2), the specialization course may be totally or partially dispensed with.

S12: If the total number of packages containing radioactive material carried does not exceed 10, and the sum of the carriage indices does not exceed 3, special provision S11 need not be applied. However, drivers shall then receive appropriate training, commensurate with and appropriate to their duties, which provides them with an awareness of the radiation hazards involved in the carriage of radioactive material. Such awareness training shall be confirmed by a certificate provided by their employer.

S13: When a consignment cannot be delivered, it shall be placed in a safe place; the competent authority should be informed as soon as possible and requested for instructions on how to proceed.

S14: The provisions of Chapter 8.4 concerning the supervision of vehicles shall apply when the total mass of these substances in the vehicle exceeds 100 kg.

S15: The provisions of Chapter 8.4 concerning the supervision of vehicles shall apply to substances of hazard group 4 whatever their mass and to substances of hazard group 3 when the total mass of such substances in the vehicle exceeds 100 kg. However, the provisions of Chapter 8.4 need not be applied when the loaded compartment is locked and the packages carried are otherwise protected against any illicit unloading.

S16: The provisions of Chapter 8.4 concerning the supervision of vehicles shall apply when the total mass of these substances in the vehicle exceeds 500 kg.

In addition, vehicles carrying more than 500 kg of these substances shall be subject at all times to supervision to prevent any malicious act and to alert the driver and competent authorities in the event of loss or fire.

S17: The provisions of Chapter 8.4 concerning the supervision of vehicles shall apply when the total mass of these substances in the vehicle exceeds 1 000 kg.

S18: The provisions of Chapter 8.4 concerning the supervision of vehicles shall apply when the total mass of such substances in the vehicle exceeds 2 000 kg.

S19: The provisions of Chapter 8.4 concerning the supervision of vehicles shall apply when the total mass of such substances in the vehicle exceeds 5 000 kg.

S20: The provisions of Chapter 8.4 concerning the supervision of vehicles shall apply when the total mass of these substances in the vehicle exceeds 10 000 kg.

S21: The provisions of Chapter 8.4 concerning the supervision of vehicles shall apply to all material, in whatever mass. In addition, these goods shall be subject at all times to supervision to prevent any malicious act and to alert the driver and the competent authorities in the event of loss or fire. However, the provisions of Chapter 8.4 need not be applied where:

(a) The loaded compartment is locked or the packages carried are otherwise protected against illicit unloading; and

(b) The dose rate does not exceed 5μSv/h at any accessible point on the outer surface of the vehicle.

PART 9

Requirements concerning the construction and approval of vehicles

CHAPTER 9.1

SCOPE, DEFINITIONS AND REQUIREMENTS FOR THE APPROVAL OF VEHICLES

9.1.1 Scope and definitions

9.1.1.1 *Scope*

The requirements of Part 9 shall apply to vehicles of categories N and O, as defined in Annex 7 of the Consolidated Resolution on the Construction of Vehicles (R.E.3)[1], intended for the carriage of dangerous goods.

These requirements refer to vehicles, as regards their construction, type approval, ADR approval and annual technical inspection.

9.1.1.2 *Definitions*

For the purposes of Part 9:

"Vehicle" means any vehicle, whether complete, incomplete or completed, intended for the carriage of dangerous goods by road;

"EX/II vehicle" or *"EX/III vehicle"* means a vehicle intended for the carriage of explosive substances and articles (Class 1);

"FL vehicle" means:

(a) a vehicle intended for the carriage of liquids having a flash-point of not more than 61°C (with the exception of diesel fuel complying with standard EN 590:1993, gas oil, and heating oil (light) - UN No. 1202 - with a flash-point as specified in standard EN 590:1993) in fixed tanks or demountable tanks with a capacity exceeding 1 m^3 or in tank-containers or portable tanks with an individual capacity exceeding 3 m^3; or

(b) a vehicle intended for the carriage of flammable gases in fixed tanks or demountable tanks with a capacity exceeding 1 m^3 or in tank-containers, portable tanks or MEGCs with an individual capacity exceeding 3 m^3; or,

(c) a battery-vehicle with a total capacity exceeding 1 m^3 intended for the carriage of flammable gases;

"OX vehicle" means a vehicle intended for the carriage of hydrogen peroxide, stabilized or hydrogen peroxide, aqueous solution stabilized with more than 60% hydrogen peroxide (Class 5.1, UN No. 2015) in fixed tanks or demountable tanks with a capacity exceeding 1 m^3 or in tank-containers or portable tanks with an individual capacity exceeding 3 m^3;

[1] *Document of the United Nations Economic Commission for Europe, TRANS/WP.29/78/Rev.1, as amended.*

"AT vehicle" means:

(a) a vehicle, other than FL or OX, intended for the carriage of dangerous goods in fixed tanks or demountable tanks with a capacity exceeding 1 m^3 or in tank-containers, portable tanks or MEGCs with an individual capacity exceeding 3 m^3; or

(b) a battery-vehicle with a total capacity exceeding 1 m^3 other than a FL vehicle;

"Complete vehicle" means any vehicle which does not need any further completion (e.g. one stage built vans, lorries, tractors, trailers);

"Incomplete vehicle" means any vehicle which still needs completion in at least one further stage (e.g. chassis-cab, trailer chassis);

"Completed vehicle" means any vehicle which is the result of a multi-stage process (e.g. chassis or chassis-cab fitted with a bodywork);

"Type-approved vehicle" means any vehicle which has been approved in accordance with ECE Regulation N. 105 [2] or Directive 98/91/EC [3];

"ADR approval" means certification by a competent authority of a Contracting Party that a single vehicle intended for the carriage of dangerous goods satisfies the relevant technical requirements of this Part as an EX/II, EX/III, FL, OX, or AT vehicle.

9.1.2 Approval of EX/II, EX/III, FL, OX and AT vehicles

NOTE: *No special certificates of approval shall be required for vehicles other than EX/II, EX/III, FL, OX and AT vehicles, apart from those required by the general safety regulations normally applicable to vehicles in the country of origin.*

9.1.2.1 *General*

EX/II, EX/III, FL, OX and AT vehicles shall comply with the relevant requirements of this Part.

Every complete or completed vehicle shall be subjected to a first inspection by the competent authority in accordance with the administrative requirements of this Chapter to verify conformity with the relevant technical requirements of Chapters 9.2 to 9.7.

The conformity of the vehicle shall be certified by the issue of a certificate of approval in accordance with 9.1.3.

When vehicles are required to be fitted with an endurance braking system, the manufacturer of the vehicle or his duly accredited representative shall issue a declaration of conformity with the relevant prescriptions of Annex 5 of ECE Regulation No. 13[4]. This declaration shall be presented at the first technical inspection.

---

[2] *ECE Regulation No. 105 (Uniform provisions concerning the approval of vehicles intended for the carriage of dangerous goods with regard to their specific constructional features).*

[3] *Directive 98/91/EC of the European Parliament and of the Council of 14 December 1998 relating to motor vehicles and their trailers intended for the transport of dangerous goods by road and amending Directive 70/156/EEC relating to the type approval of motor vehicles and their trailers (Official Journal of the European Communities No. L 011 of 16.01.1999, p. 0025 – 0036).*

[4] *ECE Regulation No. 13 (Uniform provisions concerning the approval of vehicles of categories M, N and O with regards to braking).*

9.1.2.2 ***Requirements for type-approved vehicles***

At the request of the vehicle manufacturer or his duly accredited representative, vehicles subject to ADR approval according to 9.1.2.1 may be type-approved by a competent authority. The relevant technical requirements of Chapter 9.2 shall be considered to be fulfilled if a type approval certificate has been issued by a competent authority in accordance with ECE Regulation No. 105[2] or Directive 98/91/EC[3] provided that the technical requirements of the said Regulation or the said Directive correspond to those of Chapter 9.2 of this Part and provided that no modification of the vehicle alters its validity.

This type approval, granted by one Contracting Party, shall be accepted by the other Contracting Parties as ensuring the conformity of the vehicle when the single vehicle is submitted for inspection for ADR approval.

At the inspection for ADR approval, only those parts of the type-approved incomplete vehicle which have been added or modified in the process of completion shall be inspected for compliance with the applicable requirements of Chapter 9.2.

9.1.2.3 ***Annual technical inspection***

EX/II, EX/III, FL, OX and AT vehicles shall be subject to an annual technical inspection in their country of registration to make sure that they conform to the relevant requirements of this Part, and to the general safety regulations (concerning brakes, lighting, etc.) in force in their country of registration; if these vehicles are trailers or semi-trailers coupled behind a drawing vehicle, the drawing vehicle shall be subject to technical inspection for the same purposes.

The conformity of the vehicle shall be certified either by the extension of validity of the certificate of approval or by the issue of a new certificate of approval in accordance with 9.1.3.

9.1.3 **Certificate of approval**

9.1.3.1 Conformity of EX/II, EX/III, FL, OX and AT vehicles with the requirements of this Part is subject to a certificate of approval (certificate of ADR approval) issued by the competent authority of the country of registration for each vehicle whose inspection yields satisfactory results.

9.1.3.2 A certificate of approval issued by the competent authority of one Contracting Party for a vehicle registered in the territory of that Contracting Party shall be accepted, so long as its validity continues, by the competent authorities of the other Contracting Parties.

9.1.3.3 The certificate of approval shall have the same layout as the model shown in 9.1.3.5. Its dimensions shall be 210 mm × 297 mm (format A4). Both front and back may be used. The colour shall be white, with a pink diagonal stripe.

---

[2] *ECE Regulation No 105 (Uniform provisions concerning the approval of vehicles intended for the carriage of dangerous goods with regard to their specific construction features).*

[3] *Directive 98/91/EC of the European Parliament and of the Council of 14 December 1998 relating to motor vehicles and their trailers intended for the transport of dangerous goods by road and amending Directive 70/156/EEC relating to the type approval of motor vehicles and their trailers (Official Journal of the European Communities No L011 of 16.01.1999, p. 0025-0036).*

It shall be drawn up in the language or one of the languages of the country issuing it. If that language is not English, French or German, the title of the certificate of approval and any remarks under No. 11 shall also be drawn up in English, French or German.

The certificate of approval for a vacuum-operated waste tank-vehicle shall bear the following remark: "vacuum-operated waste tank-vehicle".

9.1.3.4 The validity of a certificate of approval shall expire not later than one year after the date of the technical inspection of the vehicle preceding the issue of the certificate. The next approval term shall, however, be related to the last nominal expiry date, if the technical inspection is performed within one month before or after that date.

However, in the case of tanks subject to compulsory periodic inspection this provision shall not mean that tightness (leakproofness) tests, hydraulic pressure tests or internal inspections of tanks have to be carried out at intervals shorter than those laid down in Chapters 6.8 and 6.9.

9.1.3.5 *Model for certificate of approval for vehicles carrying certain dangerous goods*

CERTIFICATE OF APPROVAL FOR VEHICLES CARRYING CERTAIN DANGEROUS GOODS

This certificate testifies that the vehicle specified below fulfils the conditions prescribed by the European Agreement concerning the International Carriage of Dangerous Goods by Road (ADR).

1. Certificate No.:	**2. Vehicle manufacturer:**	**3. Vehicle Identification No.:**	**4. Registration number** (if any)**:**

5. Name and business address of carrier, operator or owner:

6. Description of vehicle: [1]

7. Vehicle designation(s) according to 9.1.1.2 of ADR: [2]

EX/II EX/III FL OX AT

8. Endurance braking system: [3]

□ Not applicable

□ The effectiveness according to 9.2.3.1.2 of ADR is sufficient for a total mass of the transport unit of ____t [4]

9. Description of the fixed tank(s)/battery-vehicle (if any)**:**

9.1 Manufacturer of the tank:

9.2 Approval number of the tank/battery-vehicle:

9.3 Tank manufacturer's serial number/Identification of elements of battery-vehicle:

9.4 Year of manufacture:

9.5 Tank code according to 4.3.3.1 or 4.3.4.1 of ADR:

9.6 Special provisions according to 6.8.4 of ADR (if applicable):

10. Dangerous goods authorised for carriage:

The vehicle fulfils the conditions required for the carriage of dangerous goods assigned to the vehicle designation(s) in No. 7.

10.1 In the case of an EX/II or EX/III vehicle [3]
□ goods of Class 1 including compatibility group J
□ goods of Class 1 excluding compatibility group J

10.2 In the case of a tank-vehicle/battery-vehicle [3]

□ only the substances permitted under the tank code and any special provisions specified in No. 9 may be carried [5]

or

□ only the following substances (Class, UN number, and if necessary packing group and proper shipping name) may be carried:

Only substances which are not liable to react dangerously with the materials of the shell, gaskets, equipment and protective linings (if applicable) may be carried.

11. Remarks:

12. Valid until:

Stamp of issuing service

Place, Date, Signature

[1] *According to the definitions for power-driven vehicles and for trailers of categories N and O as defined in Annex 7 of the Consolidated Resolution on the Construction of Vehicles (R.E.3) or in Directive 97/27/EC.*

[2] *Strike out what is not appropriate.*

[3] *Mark the appropriate.*

[4] *Enter appropriate value. A value of 44t will not limit the "registration / in-service maximum permissible mass" indicated in the registration document(s).*

[5] *Substances assigned to the tank code specified in No. 9 or to another tank code permitted under the hierarchy in 4.3.3.1.2 or 4.3.4.1.2, taking account of the special provision(s), if any.*

13. Extensions of validity	
Validity extended until	Stamp of issuing service, place, date, signature:

NOTE: *This certificate shall be returned to the issuing service when the vehicle is taken out of service; if the vehicle is transferred to another carrier, operator or owner, as specified in No. 5; on expiry of the validity of the certificate; and if there is a material change in one or more essential characteristics of the vehicle.*

CHAPTER 9.2

REQUIREMENTS CONCERNING THE CONSTRUCTION OF VEHICLES

9.2.1 EX/II, EX/III, FL, OX and AT vehicles shall comply with the requirements of this Chapter, according to the table below.

For vehicles other than of EX/II, EX/III, FL, OX and AT:

- the requirements of 9.2.3.1.1 (Braking equipment in accordance with ECE Regulation No. 13 or Directive 71/320/EEC) are applicable to all vehicles first registered (or which entered into service if the registration is not mandatory) after 30 June 1997;

- the requirements of 9.2.5 (Speed limitation device in accordance with ECE Regulation No. 89 or Directive 92/6/EEC) are applicable to all motor vehicles with a maximum mass exceeding 12 tonnes first registered after 31 December 1987.

		VEHICLES					COMMENTS
TECHNICAL SPECIFICATIONS		**EX/II**	**EX/III**	**AT**	**FL**	**OX**	
9.2.2	**ELECTRICAL EQUIPMENT**						
9.2.2.2	Wiring		X	X	X	X	
9.2.2.3	Battery master switch						
9.2.2.3.1			X [a]		X [a]		[a] The last sentence of 9.2.2.3.1 is applicable to vehicles first registered (or which entered into service if registration is not mandatory) as from 1 July 2005.
9.2.2.3.2			X		X		
9.2.2.3.3					X		
9.2.2.3.4			X		X		
9.2.2.4	Batteries	X	X		X		
9.2.2.5	Permanently energized circuits						
9.2.2.5.1					X		
9.2.2.5.2			X				
9.2.2.6	Electrical installation at rear of cab		X		X		
9.2.3	**BRAKING EQUIPEMENT**						
9.2.3.1	General provisions	X	X	X	X	X	
	Anti-lock braking system		X [b, d]	X [b, d]	X [b, d]	X [b, d]	[b] Applicable to vehicles first registered (or which entered into service if the registration is not mandatory) after 30 June 1993 in respect of motor vehicles (tractors and rigid vehicles) having a maximum mass exceeding 16 tonnes and trailers (i.e. full trailers, semi-trailers and centre-axle trailers) with a maximum mass exceeding 10 tonnes. Applicable to motor vehicles authorized to tow trailers with a maximum mass exceeding 10 tonnes, first registered after 30 June 1995. Applicable to all vehicles which are first approved in accordance with 9.1.2 after 30 June 2001 regardless of the date on which they were first registered. [d] Mandatory compliance for all vehicles as from 1 January 2010.

		VEHICLES					COMMENTS
TECHNICAL SPECIFICATIONS		**EX/II**	**EX/III**	**AT**	**FL**	**OX**	
	Endurance braking system		X [c, g]	X [c, g]	X [c, g]	X [c, g]	[c] Applicable to motor vehicles first registered after 30 June 1993 having a maximum mass exceeding 16 tonnes or authorized to tow a trailer with a maximum mass exceeding 10 tonnes. [g] Mandatory compliance for all motor vehicles as from 1 January 2010.
9.2.3.2	Emergency braking devices for trailers						
9.2.3.2.1		X					
9.2.3.2.2			X				
9.2.4	**PREVENTION OF FIRE RISKS**						
9.2.4.2	Vehicle cab					X	
9.2.4.3	Fuel tanks	X	X		X	X	
9.2.4.4	Engine	X	X		X	X	
9.2.4.5	Exhaust system	X	X		X		
9.2.4.6	Vehicle endurance braking		X	X	X	X	
9.2.4.7	Combustion heaters						
9.2.4.7.1 9.2.4.7.2 9.2.4.7.5		X [e]	X [e]	X [e]	X [e]	X [e]	[e] Applicable to motor vehicles equipped after 30 June 1999. Mandatory compliance by 1 January 2010 for vehicles equipped before 1 July 1999 .
9.2.4.7.3 9.2.4.7.4					X [e]		[e] Applicable to motor vehicles equipped after 30 June 1999. Mandatory compliance by 1 January 2010 for vehicles equipped before 1 July 1999.
9.2.4.7.6		X	X				
9.2.5	**SPEED LIMITATION DEVICE**	X [f]	X [f]	X [f]	X [f]	X [f]	[f] Applicable to motor vehicles with a maximum mass exceeding 12 tonnes first registered after 31 December 1987.
9.2.6	**COUPLING DEVICE OF TRAILERS**	X	X				

9.2.2 Electrical equipment

9.2.2.1 ***General provisions***

The electrical installation as a whole shall meet the provisions of 9.2.2.2 to 9.2.2.6 in accordance with the table of 9.2.1.

9.2.2.2 ***Wiring***

9.2.2.2.1 The size of conductors shall be large enough to avoid overheating. Conductors shall be adequately insulated. All circuits shall be protected by fuses or automatic circuit breakers, except for the following:

- from the battery to the cold start and stopping systems of the engine;
- from the battery to the alternator;
- from the alternator to the fuse or circuit breaker box;
- from the battery to the starter motor;
- from the battery to the power control housing of the endurance braking system (see 9.2.3.1.2), if this system is electrical or electromagnetic;
- from the battery to the electrical lifting mechanism for lifting the bogie axle.

The above unprotected circuits shall be as short as possible.

9.2.2.2.2 Cables shall be securely fastened and positioned in such a way that the conductors are adequately protected against mechanical and thermal stresses.

9.2.2.3 ***Battery master switch***

9.2.2.3.1 A switch for breaking the electrical circuits shall be placed as close to the battery as practicable. If a single pole switch is used it shall be placed in the supply lead and not in the earth lead.

9.2.2.3.2 A control device to facilitate the disconnecting and reconnecting functions of the switch shall be installed in the driver's cab. It shall be readily accessible to the driver and be distinctively marked. It shall be protected against inadvertent operation by either adding a protective cover, by using a dual movement control device or by other suitable means. Additional control devices may be installed provided they are distinctively marked and protected against inadvertent operation. If the control device(s) are electrically operated, the circuits of the control device(s) are subject to the requirements of 9.2.2.5.

9.2.2.3.3 The switch shall have a casing with protection degree IP 65 in accordance with IEC Standard 529.

9.2.2.3.4 The cable connections on the switch shall have protection degree IP 54. However, this does not apply if these connections are contained in a housing which may be the battery box. In this case it is sufficient to insulate the connections against short circuits, for example with a rubber cap.

9.2.2.4 ***Batteries***

The battery terminals shall be electrically insulated or covered by an insulating battery box cover. If the batteries are not located under the engine bonnet, they shall be fitted in a vented box.

9.2.2.5 ***Permanently energized circuits***

9.2.2.5.1 (a) Those parts of the electrical installation including the leads which shall remain energized when the battery master switch is open, shall be suitable for use in hazardous areas. Such equipment shall meet the general requirements of IEC 60079, parts 0 and 14[1] and the additional requirements applicable from IEC 60079, parts 1, 2, 5, 6, 7, 11, 15 or 18[2];

(b) For the application of IEC 60079 part 14[1], the following classification shall be used:

Permanently energized electrical equipment including the leads which is not subject to 9.2.2.3 and 9.2.2.4 shall meet the requirements for Zone 1 for electrical equipment in general or meet the requirements for Zone 2 for electrical equipment situated in the driver's cab. The requirements for explosion group IIC, temperature class T6 shall be met.

However, for permanently energized electrical equipment installed in an environment where the temperature caused by non-electrical equipment situated in that environment exceeds the T6 temperature limit, the temperature classification of the permanently energized electrical equipment shall be at least that of the T4 temperature class.

(c) The supply leads for permanently energised equipment shall either comply with the provisions of IEC 60079, part 7 ("Increased safety") and be protected by a fuse or automatic circuit breaker placed as close to the source of power as practicable or, in the case of "intrinsically safe equipment", they shall be protected by a safety barrier placed as close to the source of power as practicable.

9.2.2.5.2 Bypass connections to the battery master switch for electrical equipment which must remain energized when the battery master switch is open shall be protected against overheating by suitable means, such as a fuse, a circuit breaker or a safety barrier (current limiter).

9.2.2.6 ***Provisions concerning that part of the electrical installation situated to the rear of the driver's cab***

The whole installation shall be so designed, constructed and protected such that it cannot provoke any ignition or short-circuit under normal conditions of use of vehicles and that these risks can be minimized in the event of an impact or deformation. In particular:

9.2.2.6.1 *Wiring*

The wiring located to the rear of the driver's cab shall be protected against impact, abrasion and chafing during normal vehicle operation. Examples of appropriate protection are given in figures 1, 2, 3 and 4 below. However, the sensor cables of anti-lock braking devices do not need additional protection.

---

[1] *The requirements of IEC 60079 part 14 do not take precedence over the requirement of this Part.*

[2] *As an alternative, the general requirements of EN 50014 and the additional requirements of EN 50015, 50016, 50017, 50018, 50019, 50020, 50021 or 50028 may be used*

FIGURES

Figure N°1

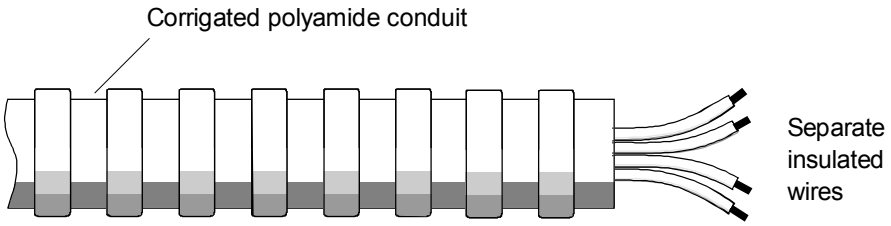

Figure N°2

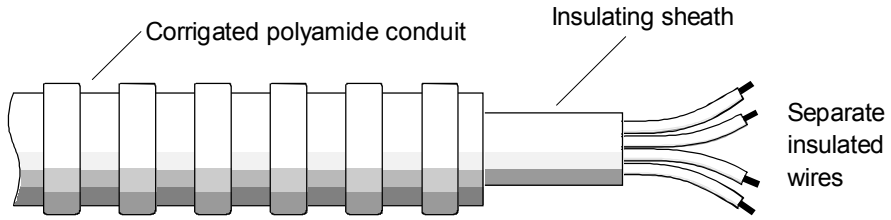

Figure N°3

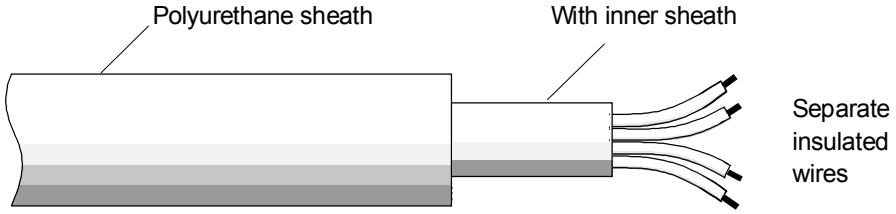

Figure N°4

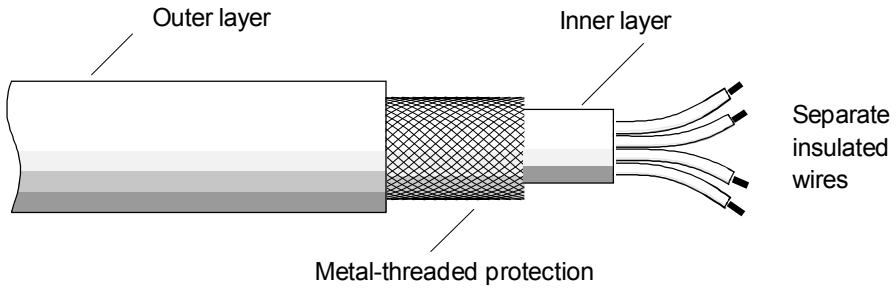

9.2.2.6.2 *Lighting*

Lamp bulbs with a screw cap shall not be used.

9.2.2.6.3 *Electrical connections*

Electrical connections between motor vehicles and trailers shall have a protection degree IP54 in accordance with IEC standard 529 and be designed to prevent accidental disconnection. Examples of appropriate connections are given in ISO 12 098:1994 and ISO 7638:1985.

9.2.3 Braking equipment

9.2.3.1 *General provisions*

9.2.3.1.1 Motor vehicles and trailers intended for use as transport units for dangerous goods shall fulfil all relevant technical requirements of ECE Regulation No.13[3] or Directive 71/320/EEC[4], as amended, in accordance with the dates of application specified therein.

9.2.3.1.2 EX/III, FL, OX and AT vehicles shall fulfil the requirements of ECE Regulation No.13[3], Annex 5.

9.2.3.2 *Emergency braking devices for trailers*

9.2.3.2.1 Trailers shall be equipped with an effective system for braking or restraining them if they become detached from the motor vehicle towing them.

9.2.3.2.2 Trailers shall be fitted with an effective braking device which acts on all the wheels, is actuated by the drawing vehicle's service-brake control and automatically stops the trailer in the event of breakage of the coupling.

9.2.4 Prevention of fire risks

9.2.4.1 *General provisions*

The following technical provisions shall apply in accordance with the table of 9.2.1.

9.2.4.2 *Vehicle cab*

Unless the driver's cab is made of materials which are not readily flammable, a shield made of metal or other suitable material of the same width as the tank shall be fitted at the rear of the cab. Any windows in the rear of the cab or in the shield shall be hermetically closed and made of fire-resistant safety glass with fire-resistant frames. Furthermore, there shall be a clear space of not less than 15 cm between the tank and the cab or the shield.

---

[3] *ECE Regulation No. 13 (Uniform provisions concerning the approval of vehicles of categories M, N and O with regard to braking).*

[4] *Directive 71/320/EEC (originally published in the Official Journal of the European Communities No. L202 of 6.9.1971).*

9.2.4.3 ***Fuel tanks***

The fuel tanks for supplying the engine of the vehicle shall meet the following requirements:

(a) In the event of any leakage, the fuel shall drain to the ground without coming into contact with hot parts of the vehicle or the load;

(b) Fuel tanks containing petrol shall be equipped with an effective flame trap at the filler opening or with a closure enabling the opening to be kept hermetically sealed.

9.2.4.4 ***Engine***

The engine propelling the vehicle shall be so equipped and situated to avoid any danger to the load through heating or ignition. In the case of EX/II and EX/III vehicles the engine shall be of compression-ignition construction.

9.2.4.5 ***Exhaust system***

The exhaust system (including the exhaust pipes) shall be so directed or protected to avoid any danger to the load through heating or ignition. Parts of the exhaust system situated directly below the fuel tank (diesel) shall have a clearance of at least 100 mm or be protected by a thermal shield.

9.2.4.6 ***Vehicle endurance braking***

Vehicles equipped with endurance braking systems emitting high temperatures placed behind the rear wall of the driver's cab shall be equipped with a thermal shield securely fixed and located between this system and the tank or load so as to avoid any heating, even local, of the tank wall or the load.

In addition, the thermal shield shall protect the braking system against any outflow or leakage, even accidental, of the load. For instance, a protection including a twin-shell shield shall be considered satisfactory.

9.2.4.7 ***Combustion heaters***

9.2.4.7.1 Combustion heaters shall comply with the relevant technical requirements of Directive 2001/56/EC[5] in accordance with the dates of application specified therein and the provisions of 9.2.4.7.2 to 9.2.4.7.6 applicable according to the table in 9.2.1.

9.2.4.7.2 The combustion heaters and their exhaust gas routing shall be designed, located, protected or covered so as to prevent any unacceptable risk of heating or ignition of the load. This requirement shall be considered as fulfilled if the fuel tank and the exhaust system of the appliance conform to provisions similar to those prescribed for fuel tanks and exhaust systems of vehicles in 9.2.4.3 and 9.2.4.5 respectively.

---

[5] *Directive 2001/56/EC of the European Parliament and of the Council of 27 September 2001 relating to heating systems for motor vehicles and their trailers (initially published in the Official Journal of the European Communities No. L292 of 9 November 2001).*

9.2.4.7.3 The combustion heaters shall be put out of operation by at least the following methods:

(a) Intentional manual switching off from the driver's cab;

(b) Stopping of the vehicle engine; in this case the heating device may be restarted manually by the driver;

(c) Start up of a feed pump on the motor vehicle for the dangerous goods carried.

9.2.4.7.4 After running is permitted after the combustion heaters have been put out of operation. For the methods of 9.2.4.7.3 (b) and (c) the supply of combustion air shall be interrupted by suitable measures after an afterrunning cycle of not more than 40 seconds. Only heaters shall be used for which proof has been furnished that the heat exchanger is resistant to the reduced afterrunning cycle of 40 seconds for the time of their normal use.

9.2.4.7.5 The combustion heater shall be switched on manually. Programming devices shall be prohibited.

9.2.4.7.6 Combustion heaters with gaseous fuels are not permitted.

9.2.5 Speed limitation device

Motor vehicles (rigid vehicles and tractors for semi-trailers) with a maximum mass exceeding 12 tonnes, shall be equipped with a speed limitation device according to the technical requirements of ECE Regulation No. 89 [6], as amended. The device shall be set in such a way that the speed cannot exceed 90 km/h, bearing in mind the technological tolerance of the device.

9.2.6 Coupling devices of trailers

Coupling devices of trailers shall comply with the technical requirements of ECE Regulation No. 55 [7] or Directive 94/20/EC [8], as amended, in accordance with the dates of application specified therein.

---

[6] *ECE Regulation No. 89: uniform provisions concerning the approval of:*

I. Vehicles with regard to limitation of their maximum speed;

II. Vehicles with regard to the installation of a speed limitation device (SLD) of an approved type;

III. Speed limitation devices (SLD).

As an alternative, the corresponding provisions of directive 92/6/EEC of the Council of 10 February 1992 (originally published in the Official Journal of the European Communities No. L 057 of 02.03.1992) and directive 92/24/EEC of the Council of 31 March 1992 (originally published in the Official Journal of the European Communities No. L 129 of 14.05.1992), as amended, may apply provided that they have been amended in accordance with the latest amended form of ECE Regulation No. 89 applicable at the time of the vehicle approval.

[7] *ECE Regulation No. 55 (Uniform provisions concerning the approval of mechanical coupling components of combinations of vehicles).*

[8] *Directive 94/20/EC of the European parliament and of the Council of 30 of May 1994 (originally published in the Official Journal of the European Communities No. L 195 of 29.07.1994).*

CHAPTER 9.3

ADDITIONAL REQUIREMENTS CONCERNING COMPLETE OR COMPLETED EX/II OR EX/III VEHICLES

9.3.1 Materials to be used in the construction of vehicle bodies

No materials likely to form dangerous compounds with the explosive substances carried shall be used in the construction of the body.

9.3.2 Combustion heaters

9.3.2.1 Combustion heaters may only be installed on EX/II and EX/III vehicles for heating of the driver's cab or the engine.

9.3.2.2 Combustion heaters shall meet the requirements of 9.2.4.7.1, 9.2.4.7.2, 9.2.4.7.5 and 9.2.4.7.6.

9.3.2.3 The switch of the combustion heater may be installed outside the driver's cab.

It is not necessary to prove that the heat exchanger is resistant to the reduced after running cycle.

9.3.2.4 No combustion heaters or fuel tanks, power sources, combustion air or heating air intakes as well as exhaust tube outlets required for the operation of the combustion heater shall be installed in the load compartment.

9.3.3 EX/II vehicles

The vehicles shall be designed, constructed and equipped so that the explosives are protected from external hazards and the weather. They shall be either closed or sheeted. Sheeting shall be resistant to tearing and be of impermeable material, not readily flammable[1]. It shall be tautened so as to cover the loading area on all sides.

All openings in the load compartment of closed vehicles shall have lockable, close-fitting doors or rigid covers. The driver's compartment shall be separated from the load compartment by a continuous wall.

9.3.4 EX/III vehicles

9.3.4.1 The vehicles shall be designed, constructed and equipped so that the explosives are protected from external hazards and the weather. These vehicles shall be closed. The driver's compartment shall be separated from the load compartment by a continuous wall. The loading surface shall be continuous. Load restraint anchorage points may be installed. All joints shall be sealed. All openings shall be capable of being locked. They shall be so constructed and placed as to overlap at the joints.

---

[1] *In the case of flammability, this requirement will be deemed to be met if, in accordance with the procedure specified in ISO standard 3795:1989 'Road vehicles, and tractors and machinery for agriculture and forestry - Determination of burning behaviour of interior materials', samples of the sheeting have a burn rate not exceeding 100 mm/min.*

9.3.4.2 The body shall be made from heat and flame resistant materials with a minimum thickness of 10 mm. Materials classified as Class B-S_3-d_2 according to standard EN 13501-1: 2002 are deemed to fulfil this requirement.

If the material used for the body is metal, the complete inside of the body shall be covered with materials fulfilling the same requirement.

9.3.5 Engine and load compartment

The engine propelling an EX/II or EX/III vehicle shall be placed forward of the front wall of the load compartment; it may nevertheless be placed under the load compartment, provided this is done in such a way that any excess heat does not constitute a hazard to the load by raising the temperature on the inner surface of the load compartment above 80 ºC.

9.3.6 External heat sources and load compartment

The exhaust system of EX/II and EX/III vehicles or others parts of these complete or completed vehicles shall be so constructed and situated that any excess heat shall not constitute a hazard to the load by raising the temperature on the inner surface of the load compartment above 80 ºC.

9.3.7 Electrical equipment

9.3.7.1 The rated voltage of the electrical system shall not exceed 24V.

9.3.7.2 Any lighting in the load compartment of EX/II vehicles shall be on the ceiling and covered, i.e. with no exposed wiring or bulb.

In the case of Compatibility Group J, the electrical installation shall be at least IP65 (e.g. flame-proof Eex d). Any electrical equipment accessible from the inside of the load compartment shall be sufficiently protected from mechanical impact from the inside.

9.3.7.3 The electrical installation on EX/III vehicles shall meet the requirements of 9.2.2.2, 9.2.2.3, 9.2.2.4, 9.2.2.5.2 and 9.2.2.6.

The electrical installation in the load compartment shall be dust-protected (at least IP54 or equivalent) or, in the case of Compatibility Group J, at least IP65 (e.g. flame-proof Eex d).

CHAPTER 9.4

ADDITIONAL REQUIREMENTS CONCERNING THE CONSTRUCTION OF THE BODIES OF COMPLETE OR COMPLETED VEHICLES INTENDED FOR THE CARRIAGE OF DANGEROUS GOODS IN PACKAGES (OTHER THAN EX/II AND EX/III VEHICLES)

9.4.1 Combustion heaters shall meet the following requirements:

(a) The switch may be installed outside the driver's cab;

(b) The device may be switched off from outside the load compartment; and

(c) It is not necessary to prove that the heat exchanger is resistant to the reduced after running cycle.

9.4.2 If the vehicle is intended for the carriage of dangerous goods for which a label conforming to models Nos. 1, 1.4, 1.5, 1.6, 3, 4.1, 4.3, 5.1 or 5.2 is prescribed, no fuel tanks, power sources, combustion air or heating air intakes as well as exhaust tube outlets required for the operation of the combustion heater shall be installed in the load compartment. It shall be ensured that the heating air outlet cannot be blocked by cargo. The temperature to which packages are heated shall not exceed 50º C. Heating devices installed inside the load compartments shall be designed so as to prevent the ignition of an explosive atmosphere under operating conditions.

9.4.3 Additional requirements concerning the construction of the bodies of vehicles intended for the carriage of given dangerous goods or specific packagings may be included in Part 7, Chapter 7.2 in accordance with the indications in Column (16) of Table A of Chapter 3.2, for a given substance.

CHAPTER 9.5

ADDITIONAL REQUIREMENTS CONCERNING THE CONSTRUCTION OF THE BODIES OF COMPLETE OR COMPLETED VEHICLES INTENDED FOR THE CARRIAGE OF DANGEROUS SOLIDS IN BULK

9.5.1 Combustion heaters shall meet the following requirements:

(a) The switch may be installed outside the driver's cab;

(b) The device may be switched off from outside the load compartment; and

(c) It is not necessary to prove that the heat exchanger is resistant to the reduced after running cycle.

9.5.2 If the vehicle is intended for the carriage of dangerous goods for which a label conforming to models Nos. 4.1, 4.3 or 5.1 is prescribed, no fuel tanks, power sources, combustion air or heating air intakes as well as exhaust tube outlets required for the operation of the combustion heater shall be installed in the load compartment. It shall be ensured that the heating air outlet cannot be blocked by cargo. The temperature to which the load is heated shall not exceed 50 ºC. Heating devices installed inside the load compartments shall be designed so as to prevent the ignition of an explosive atmosphere under operating conditions.

9.5.3 The bodies of vehicles intended for the carriage of dangerous solids in bulk shall meet the requirements of Chapter 6.11 and 7.3, as appropriate, including those of 7.3.2 or 7.3.3 which may be applicable in accordance with the indications in columns (10) or (17) respectively of Table A of Chapter 3.2 for a given substance.

CHAPTER 9.6

ADDITIONAL REQUIREMENTS CONCERNING COMPLETE OR COMPLETED VEHICLES INTENDED FOR THE CARRIAGE OF TEMPERATURE CONTROLLED SUBSTANCES

9.6.1 Insulated, refrigerated and mechanically-refrigerated vehicles intended for the carriage of temperature controlled substances shall conform to the following conditions:

(a) the vehicle shall be such and so equipped as regards its insulation and means of refrigeration, that the control temperature prescribed in 2.2.41.1.17 and 2.2.52.1.16 and in 2.2.41.4 and 2.2.52.4 for the substance to be carried is not exceeded. The overall heat transfer coefficient shall be not more than 0.4 W/m^2K;

(b) the vehicle shall be so equipped that vapours from the substances or the coolant carried cannot penetrate into the driver's cab;

(c) a suitable device shall be provided enabling the temperature prevailing in the loading space to be determined at any time from the cab;

(d) the loading space shall be provided with vents or ventilating valves if there is any risk of a dangerous excess pressure arising therein. Care shall be taken where necessary to ensure that refrigeration is not impaired by the vents or ventilating valves;

(e) the refrigerant shall not be flammable; and

(f) the refrigerating appliance of a mechanically refrigerated vehicle shall be capable of operating independently of the engine used to propel the vehicle.

9.6.2 Suitable methods (see V8(3)) to prevent the control temperature from being exceeded are listed in Chapter 7.2 (R1 to R5). Depending on the method used, additional provisions concerning the construction of vehicle bodies may be included in Chapter 7.2.

CHAPTER 9.7

ADDITIONAL REQUIREMENTS CONCERNING FIXED TANKS (TANK-VEHICLES), BATTERY-VEHICLES AND COMPLETE OR COMPLETED VEHICLES USED FOR THE CARRIAGE OF DANGEROUS GOODS IN DEMOUNTABLE TANKS WITH A CAPACITY GREATER THAN 1 M^3 OR IN TANK-CONTAINERS, PORTABLE TANKS OR MEGCs OF A CAPACITY GREATER THAN 3 M^3 (FL, OX AND AT VEHICLES)

9.7.1 General provisions

9.7.1.1 In addition to the vehicle proper, or the units of running gear used in its stead, a tank-vehicle comprises one or more shells, their items of equipment and the fittings for attaching them to the vehicle or to the running-gear units.

9.7.1.2 Once the demountable tank has been attached to the carrier vehicle, the entire unit shall meet the requirements prescribed for tank-vehicles.

9.7.2 Requirements concerning tanks

9.7.2.1 Fixed tanks or demountable tanks made of metal shall meet the relevant requirements of Chapter 6.8.

9.7.2.2 Elements of battery-vehicles and of MEGCs shall meet the relevant requirements of Chapter 6.2 in the case of cylinders, tubes, pressure drums and bundles of cylinders and the requirements of Chapter 6.8 in the case of tanks.

9.7.2.3 Tank-containers made of metal shall meet the requirements of Chapter 6.8, portable tanks shall meet the requirements of Chapter 6.7 or, if applicable, those of the IMDG Code (see 1.1.4.2).

9.7.2.4 Tanks made of fibre-reinforced plastics material shall meet the requirements of Chapter 6.9.

9.7.2.5 Vacuum-operated waste tank-vehicles shall meet the requirements of Chapter 6.10.

9.7.3 Fastenings

Fastenings shall be designed to withstand static and dynamic stresses in normal conditions of carriage, and minimum stresses as defined in 6.8.2.1.2, 6.8.2.1.11 to 6.8.2.1.15 and 6.8.2.1.16 in the case of tank-vehicles, battery-vehicles, and vehicles carrying demountable tanks.

9.7.4 Earthing of FL vehicles

Tanks made of metal or of fibre-reinforced plastics material of FL tank-vehicles and battery elements of FL battery-vehicles shall be linked to the chassis by means of at least one good electrical connection. Any metal contact capable of causing electrochemical corrosion shall be avoided.

NOTE: *See also 6.9.1.2 and 6.9.2.14.3.*

9.7.5 Stability of tank-vehicles

9.7.5.1 The overall width of the ground-level bearing surface (distance between the outer points of contact with the ground of the right-hand tyre and the left-hand tyre of the same axle) shall be at least equal to 90% of the height of the centre of gravity of the laden tank-vehicle. In an articulated vehicle the mass on the axles of the load-carrying unit of the laden semi-trailer shall not exceed 60% of the nominal total laden mass of the complete articulated vehicle.

9.7.5.2 In addition, tank-vehicles with fixed tanks with a capacity of more than 3 m^3 intended for the carriage of dangerous goods in the liquid or molten state tested with a pressure of less than 4 bar, shall comply with the technical requirements of ECE Regulation No. 111 [1] for lateral stability, as amended, in accordance with the dates of application specified therein. The requirements are applicable to tank-vehicles which are first registered as from 1 July 2003.

9.7.6 Rear protection of vehicles

A bumper sufficiently resistant to rear impact shall be fitted over the full width of the tank at the rear of the vehicle. There shall be a clearance of at least 100 mm between the rear wall of the tank and the rear of the bumper (this clearance being measured from the rearmost point of the tank wall or from projecting fittings or accessories in contact with the substance being carried). Vehicles with a tilting shell for the carriage of powdery or granular substances and a vacuum-operated waste tank with a tilting shell with rear discharge do not require a bumper if the rear fittings of the shell are provided with a means of protection which protects the shell in the same way as a bumper.

NOTE 1: *This provision does not apply to vehicles used for the carriage of dangerous goods in tank-containers, MEGCs or portable tanks.*

NOTE 2: *For the protection of tanks against damage by lateral impact or overturning, see 6.8.2.1.20 and 6.8.2.1.21 or, for portable tanks, 6.7.2.4.3 and 6.7.2.4.5.*

9.7.7 Combustion heaters

9.7.7.1 Combustion heaters shall meet the requirements of 9.2.4.7.1, 9.2.4.7.2, 9.2.4.7.5 and the following:

(a) The switch may be installed outside the driver's cab;

(b) The device may be switched off from outside the load compartment; and

(c) It is not necessary to prove that the heat exchanger is resistant to the reduced afterrunning cycle.

In addition for FL vehicles, they shall meet the requirements of 9.2.4.7.3 and 9.2.4.7.4.

9.7.7.2 If the vehicle is intended for the carriage of dangerous goods for which a label conforming to models Nos. 3, 4.1, 4.3, 5.1 or 5.2 is prescribed, no fuel tanks, power sources, combustion air or heating air intakes as well as exhaust tube outlets required for the operation of the combustion heater shall be installed in the load compartment. It shall be ensured that the heating air outlet cannot be blocked by cargo. The temperature to which the load is heated shall not exceed 50 ºC. Heating devices installed inside the load compartments shall be designed so as to prevent the ignition of an explosive atmosphere under operating conditions.

---

[1] *ECE Regulation No. 111: Uniform provisions concerning the approval of tank-vehicles of categories N and O with regard to rollover stability.*

9.7.8 Electrical equipment

9.7.8.1 The electrical installation on FL vehicles for which an approval according to 9.1.2 is required shall meet the requirements of 9.2.2.2, 9.2.2.3, 9.2.2.4, 9.2.2.5.1 and 9.2.2.6.

However additions to or modifications of the electrical installations of the vehicle shall meet the requirements for the electrical apparatus of the relevant group and temperature class according to the substances to be carried.

NOTE: *For transitional provisions, see also 1.6.5.*

9.7.8.2 Electrical equipment on FL vehicles, situated in areas where an explosive atmosphere is, or may be expected to be, present in such quantities as to require special precautions, shall be suitable for use in a hazardous area. Such equipment shall meet the general requirements of IEC 60079 parts 0 and 14 and the additional requirements applicable form IEC 60079 parts 1, 2, 5, 6, 7, 11 or 18 [2]. The requirements for the electrical apparatus of the relevant group and temperature class according to the substances to be carried shall be met.

For the application of IEC 60079 part 14 [2], the following classification shall be used:

<u>ZONE 0</u>

Inside tank compartments, fittings for filling and discharge and vapour recovery lines.

<u>ZONE 1</u>

Inside cabinets for equipment used for filling and discharge and within 0.5 m of venting devices and pressure relief safety valves.

9.7.8.3 Permanently energized electrical equipment, including the leads, which is situated outside Zones 0 and 1 shall meet the requirements for Zone 1 for electrical equipment in general or meet the requirements for Zone 2 according to IEC 60079 part 14 [2] for electrical equipment situated in the driver's cab. The requirements for the relevant group of electrical apparatus according to the substances to be carried shall be met.

---

[2] *As an alternative, the general requirements of EN 50014 and the additional requirements of EN 50015, 50016, 50017, 50018, 50019, 50020 or 50028 may be used.*